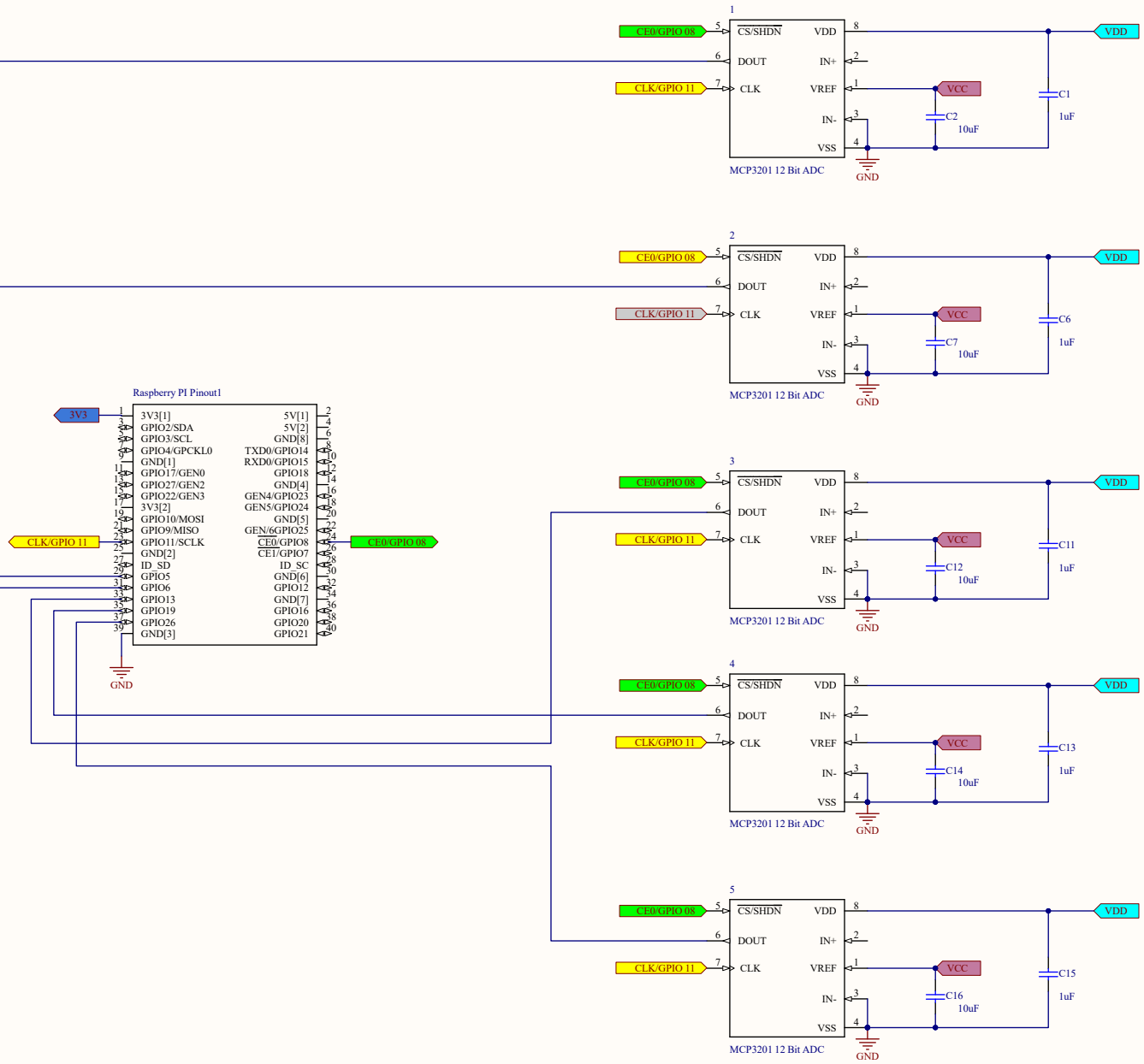

Analog Section Voltage Filter

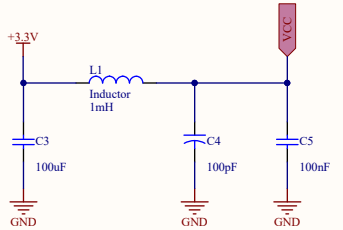

Digital Section Voltage Filter

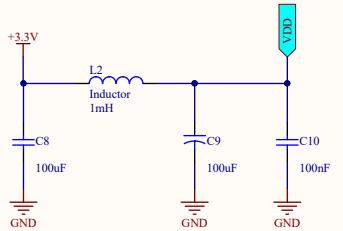

Title		
Size A3	Number	Revision
Date: 1/21/2020	Sheet of	
File: C:\Users\..\Sheet1.SchDoc	Drawn By:	