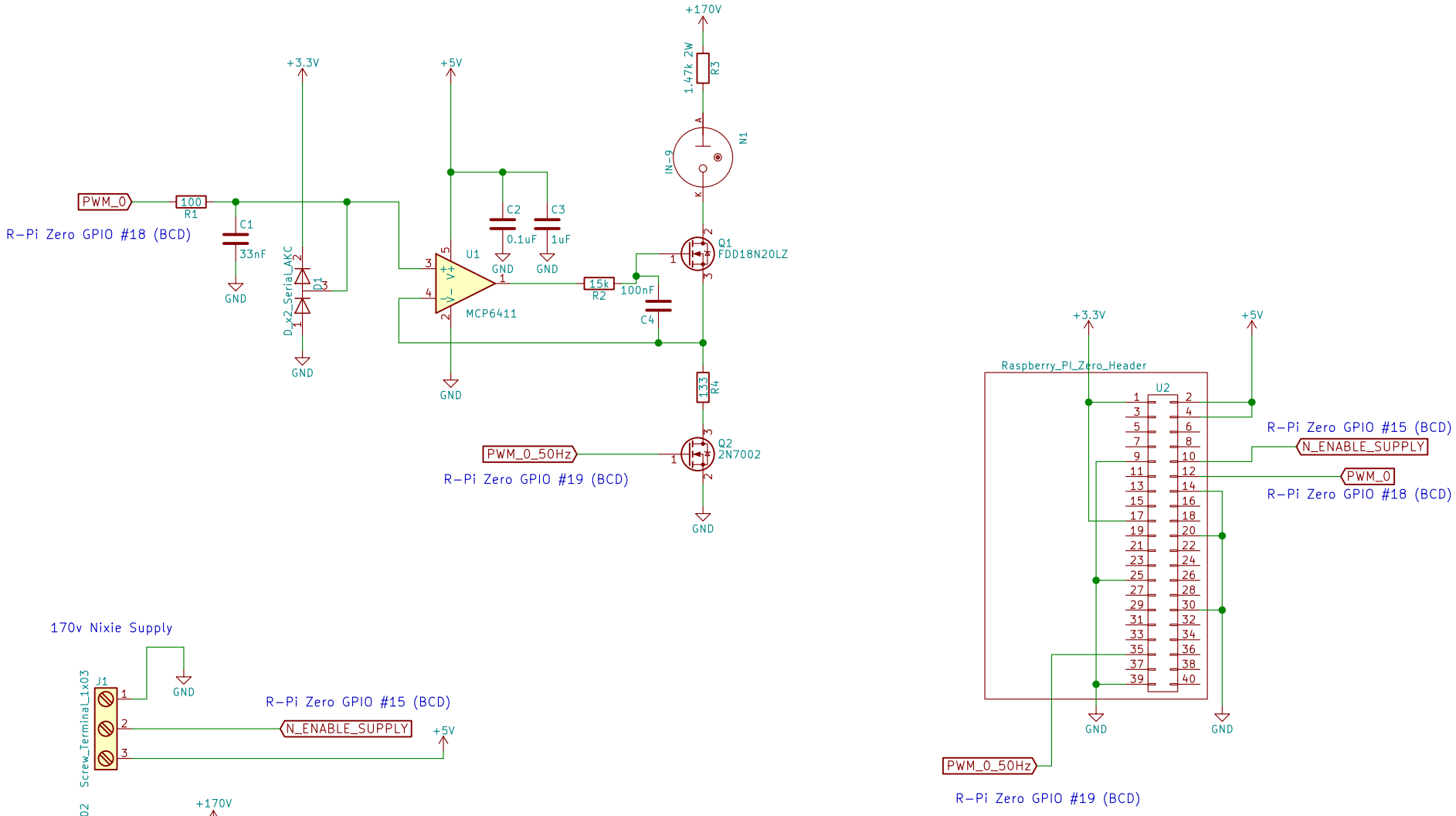

Sheet: /
File: NixieBargraphHat.sch

Title:

Size: A4	Date:	Rev:
KiCad E.D.A. kicad 4.0.7-e2-637661ubuntu18.04.1		Id: 1/1