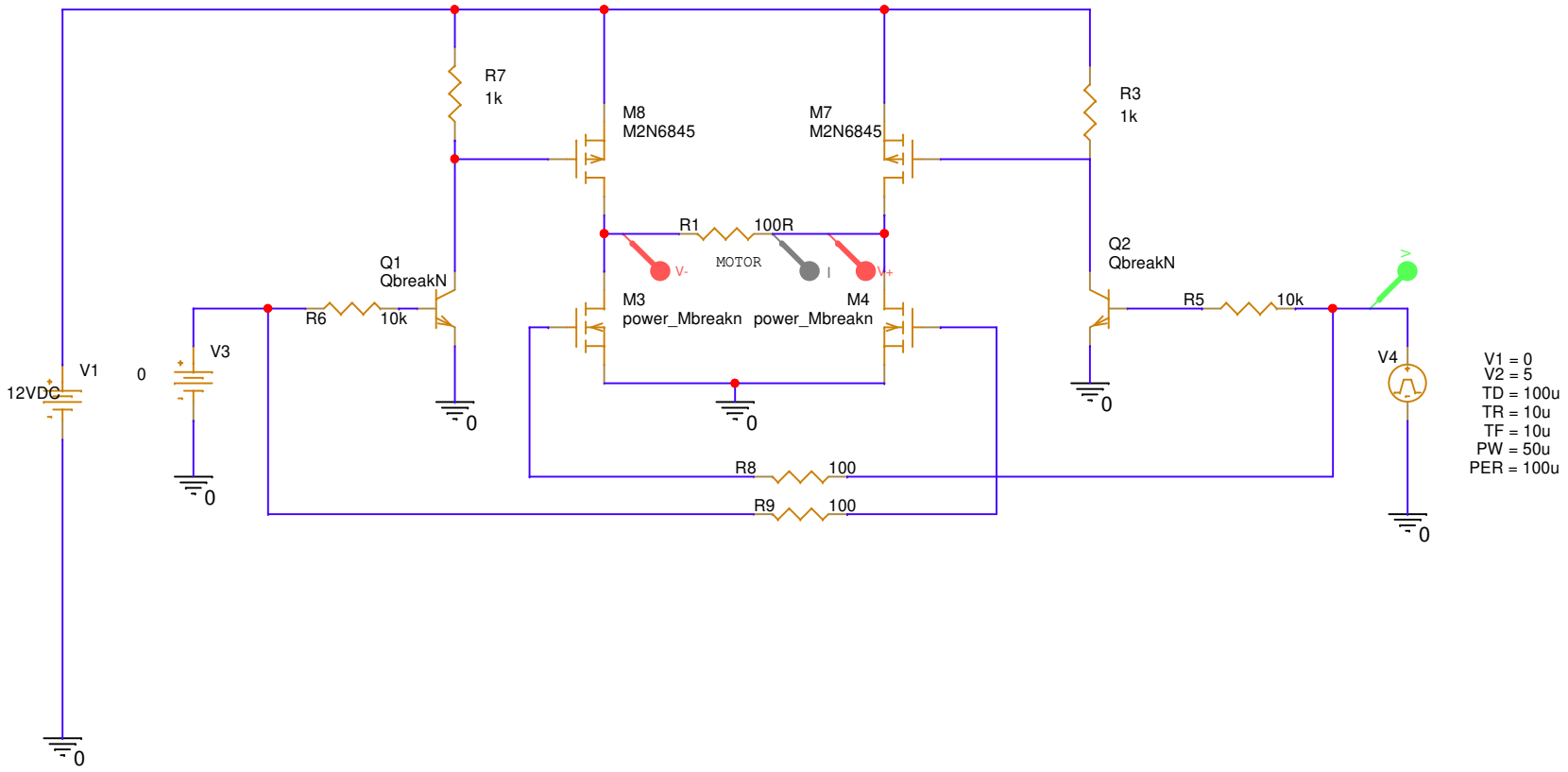

Title	hbridge simulation	
Size A	Document Number <Doc>	Rev 1
Date: Wednesday, November 23, 2022	Sheet 1 of 1	