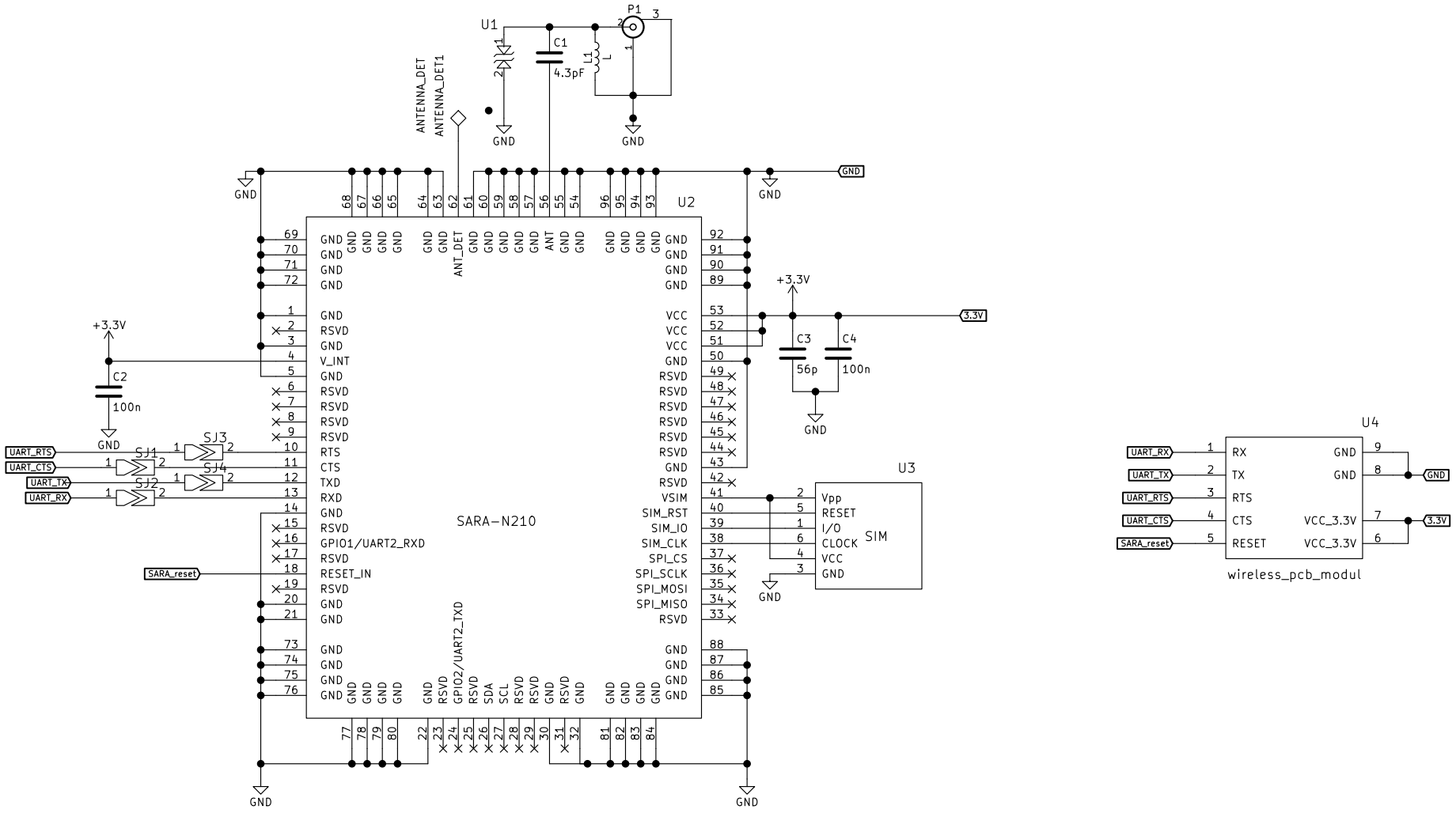

Supported by Vodafone

LABKA z.s. **i_a**

Sheet: /

File: sensenet_sara_modul.sch

Title: Nb-Iot module shield

Size: A4	Date: 2017-12-21	**Rev: 1.0**
KiCad E.D.A. kicad 4.0.7+dfsg1-1bpo8+1		Id: 1/1