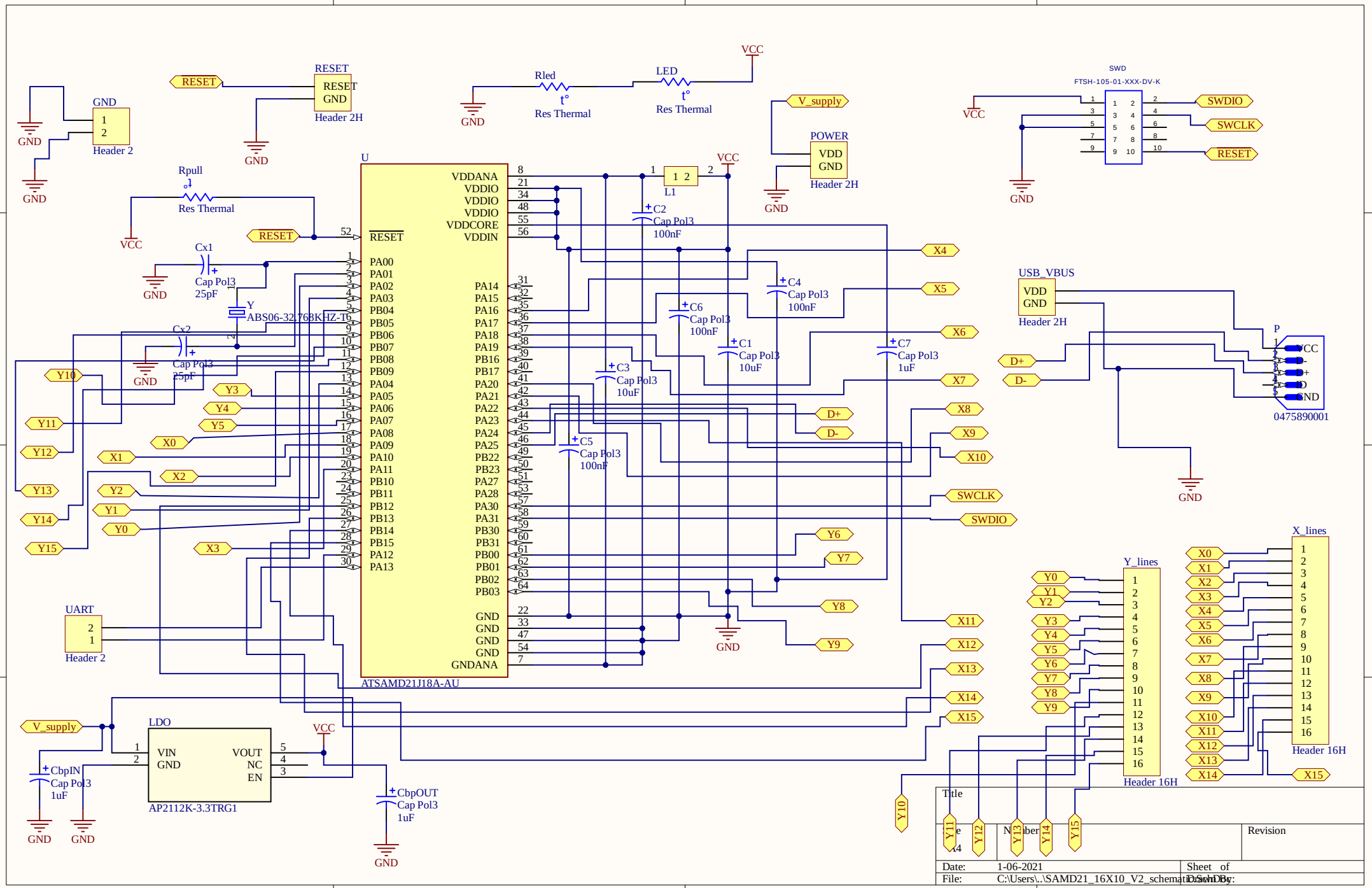
U
ATSAMD21J18A-AU
VDDANA
VDDIO
VDDIO
VDDIO
VDDCORE
VDDIN
RESET
PA00
PA01
PA02
PA03
PB04
PB05
PB06
PB07
PB08
PB09
PA04
PA05
PA06
PA07
PA08
PA09
PA10
PA11
PB10
PB11
PB12
PB13
PB14
PB15
PA12
PA13
PA14
PA15
PA16
PA17
PA18
PA19
PB16
PB17
PA20
PA21
PA22
PA23
PA24
PA25
PB22
PB23
PA27
PA28
PA30
PA31
PB30
PB31
PB00
PB01
PB02
PB03
GND
GND
GND
GND
GNDANA
RESET
Header 2H
GND
Header 2
GND
Rpull
Res Thermal
VCC
Cx1
Cap Pol3
25pF
Y
ABS06-32.768KHZ-T6
Cx2
Cap Pol3
25pF
Rled
Res Thermal
LED
Res Thermal
VCC
L1
C2
Cap Pol3
100nF
C4
Cap Pol3
100nF
C6
Cap Pol3
100nF
C1
Cap Pol3
10uF
C7
Cap Pol3
1uF
C3
Cap Pol3
10uF
C5
Cap Pol3
100nF
V_supply
POWER
VDD
GND
Header 2H
SWD
FTSH-105-01-XXX-DV-K
SWDIO
SWCLK
RESET
USB_VBUS
VDD
GND
Header 2H
D+
D-
P
VCC
-
+
D
GND
0475890001
X0
X1
X2
X3
X4
X5
X6
X7
X8
X9
X10
X11
X12
X13
X14
X15
Y0
Y1
Y2
Y3
Y4
Y5
Y6
Y7
Y8
Y9
Y10
Y11
Y12
Y13
Y14
Y15
UART
Header 2
LDO
VIN
GND
VOUT
NC
EN
AP2112K-3.3TRG1
CbpIN
Cap Pol3
1uF
CbpOUT
Cap Pol3
1uF
Y_lines
Header 16H
X_lines
Header 16H
Title
Size
A4
Number
Revision
Date: 1-06-2021
File: C:\Users\..\SAMD21_16X10_V2_schematic.SchDoc
Sheet of
Drawn By:

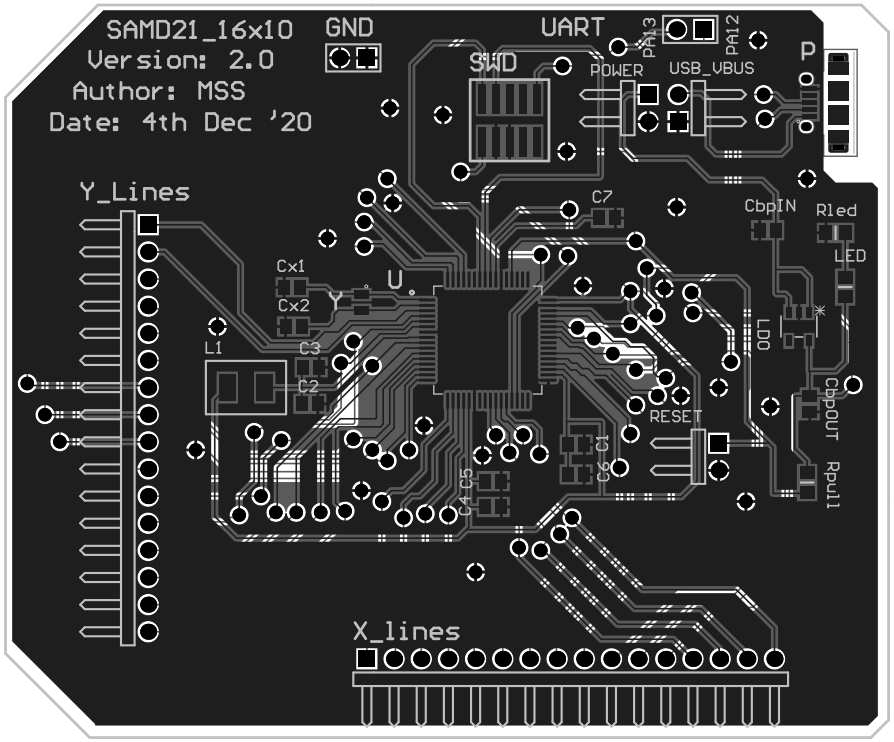
SAMD21_16x10
Version: 2.0
Author: MSS
Date: 4th Dec '20
GND
UART
PA13
PA12
SWD
POWER
USB_VBUS
P
o
o
Y_Lines
C7
CbpIN
Rled
LED
Cx1
Cx2
Y
U
L1
C3
C2
LDO
CbpOUT
RESET
C6
C1
C4
C5
Rpull
X_lines