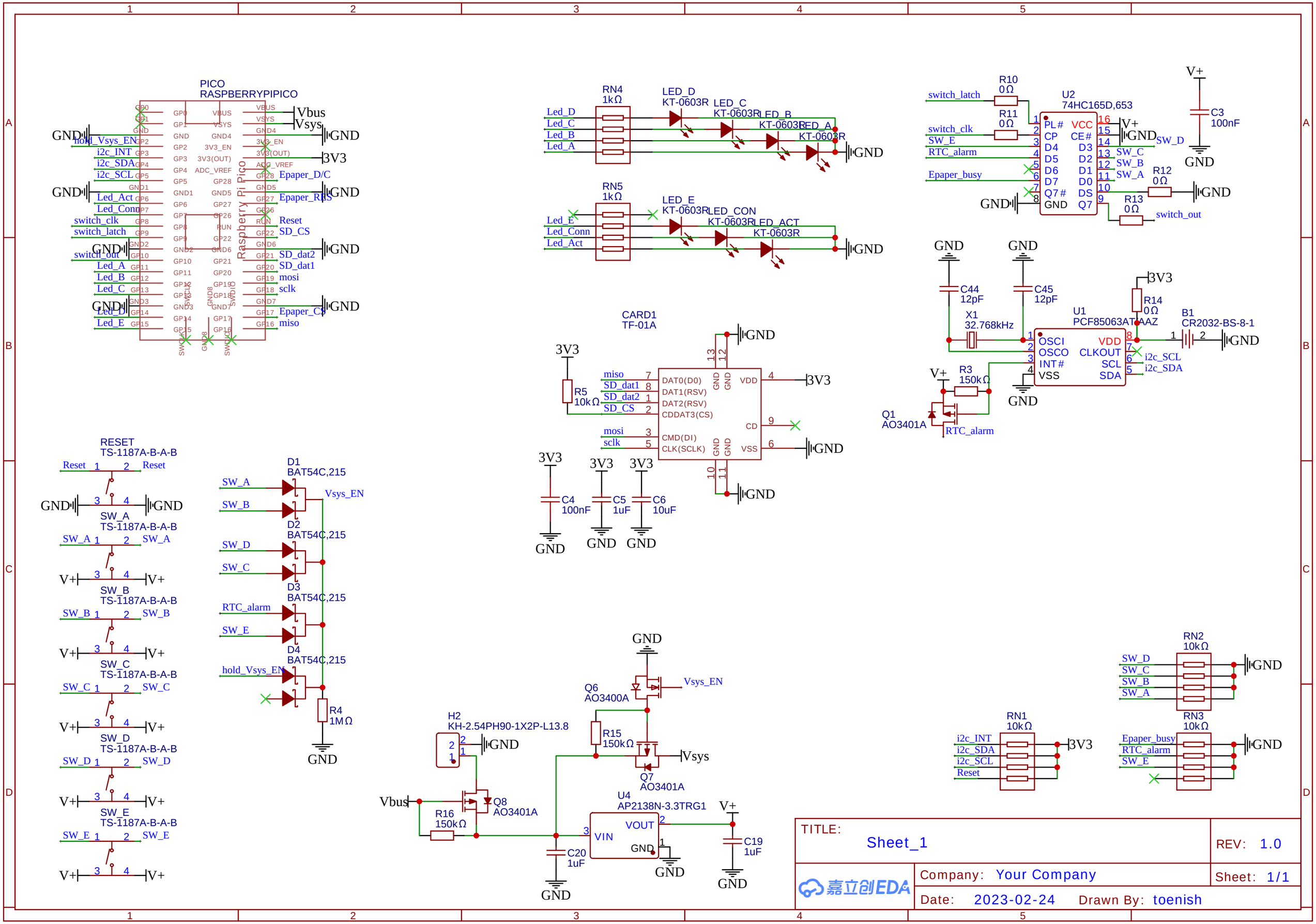
PICO
RASPBERRYPIPICO
Raspberry Pi Pico
Vbus
Vsys
GND
3V3
hold_Vsys_EN
i2c_INT
i2c_SDA
i2c_SCL
Led_Act
Led_Conn
switch_clk
switch_latch
switch_out
Led_A
Led_B
Led_C
Led_D
Led_E
Epaper_D/C
Epaper_RES
Reset
SD_CS
SD_dat2
SD_dat1
mosi
sclk
Epaper_CS
miso
RN4
1kΩ
LED_D
KT-0603R
LED_C
LED_B
LED_A
RN5
1kΩ
LED_E
LED_CON
LED_ACT
R10
0Ω
R11
0Ω
U2
74HC165D,653
PL#
CP
D4
D5
D6
D7
Q7#
GND
VCC
CE#
D3
D2
D1
D0
DS
Q7
SW_D
SW_C
SW_B
SW_A
Epaper_busy
RTC_alarm
R12
0Ω
R13
0Ω
C3
100nF
C44
12pF
C45
12pF
X1
32.768kHz
U1
PCF85063ATAAZ
OSCI
OSCO
INT#
VSS
VDD
CLKOUT
SCL
SDA
R14
0Ω
B1
CR2032-BS-8-1
R3
150kΩ
Q1
AO3401A
CARD1
TF-01A
DAT0(D0)
DAT1(RSV)
DAT2(RSV)
CDDAT3(CS)
CMD(DI)
CLK(SCLK)
CD
R5
10kΩ
C4
100nF
C5
1uF
C6
10uF
RESET
TS-1187A-B-A-B
D1
BAT54C,215
D2
BAT54C,215
D3
BAT54C,215
D4
BAT54C,215
Vsys_EN
R4
1MΩ
H2
KH-2.54PH90-1X2P-L13.8
Q6
AO3400A
R15
150kΩ
Q7
AO3401A
Q8
AO3401A
R16
150kΩ
U4
AP2138N-3.3TRG1
VIN
VOUT
C20
1uF
C19
1uF
RN1
10kΩ
RN2
10kΩ
RN3
10kΩ
Epaper_busy
TITLE:
Sheet_1
REV: 1.0
Company: Your Company
Sheet: 1/1
Date: 2023-02-24
Drawn By: toenish
嘉立创EDA

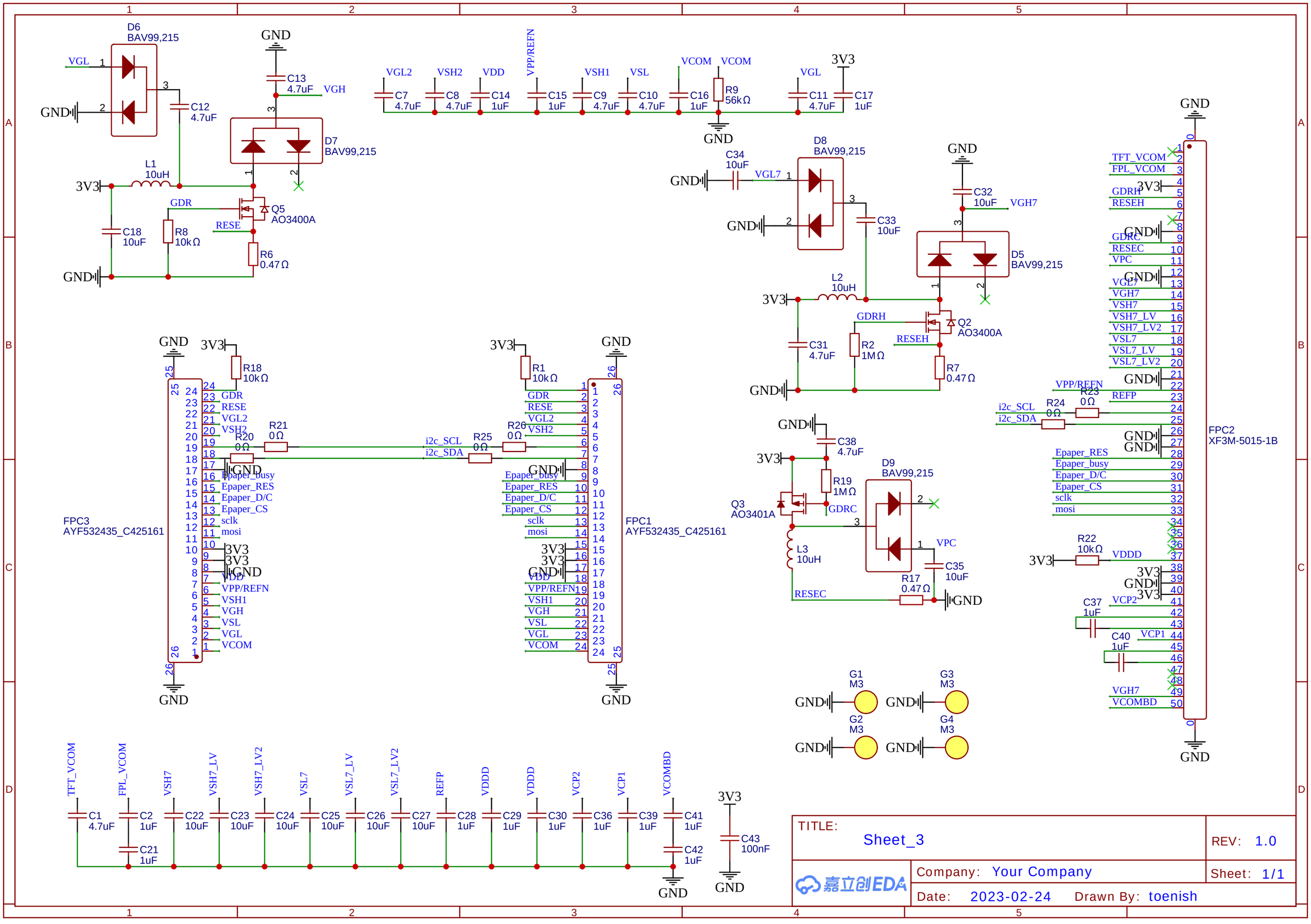
D6
BAV99,215
VGL
GND
C12
4.7uF
C13
4.7uF
VGH
D7
BAV99,215
L1
10uH
3V3
GDR
RESE
Q5
AO3400A
C18
10uF
R8
10kΩ
R6
0.47Ω
VGL2
VSH2
VDD
VPP/REFN
VSH1
VSL
VCOM
C7
4.7uF
C8
4.7uF
C14
1uF
C15
1uF
C9
4.7uF
C10
4.7uF
C16
1uF
R9
56kΩ
C11
4.7uF
C17
1uF
C34
10uF
VGL7
D8
BAV99,215
C33
10uF
C32
10uF
VGH7
D5
BAV99,215
L2
10uH
GDRH
RESEH
Q2
AO3400A
C31
4.7uF
R2
1MΩ
R7
0.47Ω
R18
10kΩ
R20
0Ω
R21
0Ω
i2c_SCL
i2c_SDA
R25
0Ω
R26
0Ω
R1
10kΩ
FPC3
AYF532435_C425161
FPC1
AYF532435_C425161
Epaper_busy
Epaper_RES
Epaper_D/C
Epaper_CS
sclk
mosi
VPP/REFN
VSH1
VGH
VSL
VGL
VCOM
C38
4.7uF
R19
1MΩ
Q3
AO3401A
GDRC
L3
10uH
D9
BAV99,215
VPC
C35
10uF
R17
0.47Ω
RESEC
TFT_VCOM
FPL_VCOM
RESEC
VPC
VGL7
VSH7
VSH7_LV
VSH7_LV2
VSL7
VSL7_LV
VSL7_LV2
REFP
R23
0Ω
R24
0Ω
R22
10kΩ
VDDD
VCP2
VCP1
C37
1uF
C40
1uF
VCOMBD
FPC2
XF3M-5015-1B
G1
M3
G2
M3
G3
M3
G4
M3
C1
4.7uF
C2
1uF
C21
1uF
C22
10uF
C23
10uF
C24
10uF
C25
10uF
C26
10uF
C27
10uF
C28
1uF
C29
1uF
C30
1uF
C36
1uF
C39
1uF
C41
1uF
C42
1uF
C43
100nF
TITLE:
Sheet_3
REV: 1.0
Company: Your Company
Sheet: 1/1
Date: 2023-02-24
Drawn By: toenish
嘉立创EDA