Paper/Talk presented at the Strategic Management Society,
Montreal, 1983

THE ANALYSIS OF RENTS

AN APPROACH TO STRATEGY WORK

Richard P. Rumelt
University of California, Los Angeles

WHAT IS THE INSTITUTIONAL APPROACH TO STRATEGY?

FOCUS ON TRANSACTIONS, EXCHANGE, AND CONTRACTS

USE OF MODERN INSTITUTIONAL ECONOMIC THEORY

PRESUMPTION OF EXPECTATIONAL EQUILIBRIUM

LOCUS OF ANALYSIS BELOW THE "BUSINESS" LEVEL OF ABSTRACTION

EMBRACE, RATHER THAN SIMPLIFY, INSTITUTIONAL COMPLEXITY OF REAL INDUSTRY

WHY IS THIS APPROACH BEING DEVELOPED?

FRUSTRATION WITH RECEIVED WISDOM

OPPORTUNITY BASED ON REVOLUTION IN MICROECONOMIC THEORY

FRUSTRATION WITH RECEIVED WISDOM

A GREAT DEAL OF "STRATEGIC" MANAGEMENT IS REALLY "PRESENTATION" MANAGEMENT

- Plays on human tendency to see patterns in chaos
- Is based on questionable and untested assumptions
- Draws inappropriate conclusions from empirical data

THERE IS HEAVY RELIANCE ON THE "TRIAGE" APPROACH TO MANAGING COMPLEX BUSINESSES

- Replaces strategy evaluation problem with performance measurement problem
- Vulnerable to the valuation fallacy

MOST STRATEGIC MANAGEMENT TOOLS ARE VERY BLUNT -- GOOD STRATEGY WORK ALMOST INVARIABLY REQUIRES AN IMMERSION IN THE DETAILS OF THE SITUATION

FRUSTRATION WITH RECEIVED WISDOM (cont'd)

COST-BASED TOOLS WERE AN IMPORTANT BREAKTHROUGH BUT WE NOW NEED TO ELABORATE THEM AND GO BEYOND THEM

- There are a great many mechanisms that can lead to cost asymmetry
- Producer's costs are only part of the story

THE INDUSTRIAL ORGANIZATION FRAMEWORK IS ROOTED IN IDEAS THAT APPLY TO GROUPS OF SIMILAR FIRMS

- Bringing 10 to bear on strategy questions was a critical breakthrough in the development of the field
- 10 theory is most comfortable in dealing with the performance of groups of firms -- yet heterogeneity is ubiquitous in the real world
- IO's intellectual roots lie in the identification of profit with market power

OPPORTUNITY BASED ON A REVOLUTION IN MICROECONOMIC THEORY (Its about time!)

TRANSACTION COST CONCEPTS

Coase, Williamson

THEORY OF MANAGEMENT CONTROL

Alchain, Demsetz, Ouchi

AGENCY THEORY

Fama, Jensen, Grossman, Meckling

SPECIALIZED CAPITAL AND THE "HOLD-UP" PROBLEM

Klein, Crawford, Alchain, Leffler

SCHUMPETERIAN COMPETITION

Nelson, Winter

WHAT IS THE INSTITUTIONAL VIEW

IT POSITS AN EXPECTATIONAL EQUILIBRIUM IN WHICH DE NOVO ACTORS CANNOT EXPECT TO INCREASE THEIR WEALTH

- De novo: without special resources, knowledge, or historical relationships
- Cannot expect to buy entry barriers or market share for less than their worth
- Does not rule out luck!

IN SPIRIT, THE INSTITUTIONAL VIEW BEGINS WITH BELIEF THAT THE APPARENT CHAOS OF INSTITUTIONAL REALITY IS SUBJECT TO RATIONAL EXPLANATION

- How DeBeers markets diamonds
- How software piracy affects software publication and distribution system
- To "predict" the wording in a contract

THE INSTITUTIONAL APPROACH DOES NOT TAKE FIRMS AS A GIVEN, BUT ASKS INSTEAD "WHICH ARRANGEMENTS OF INDIVIDUALS, FIRMS, CONTRACT, AND MARKETS ARE MOST EFFICIENT?"

INSTITUTIONAL APPROACH FOCUSES ON RENTS

RENTS ARE PERSISTENT SURPLUS (OR DEFICIT) PROFITS THAT ARE NOT COMPETED AWAY

Rents attach to particular specialized assets and not necessarily to businesses, firms, or groups of firms (industries). The focus on rents lowers the level of abstraction

RENTS REQUIRE UNCERTAINTY FOR THEIR CREATION AND SOME IMPEDIMENT TO EQUILIBRATION FOR THEIR PERSISTENCE

Examples: Oil wells
Smirnoff

OIL PROPERTIES EXAMPLE

PROPERTY	A	B	C
INVESTMENT	100	100	100
FIND ($/YEAR)	2	8	20
ROI	2%	8%	20%
RENT	-8	-2	+10
MARKET VALUE	20	80	200
VALUE	-80	-20	+100

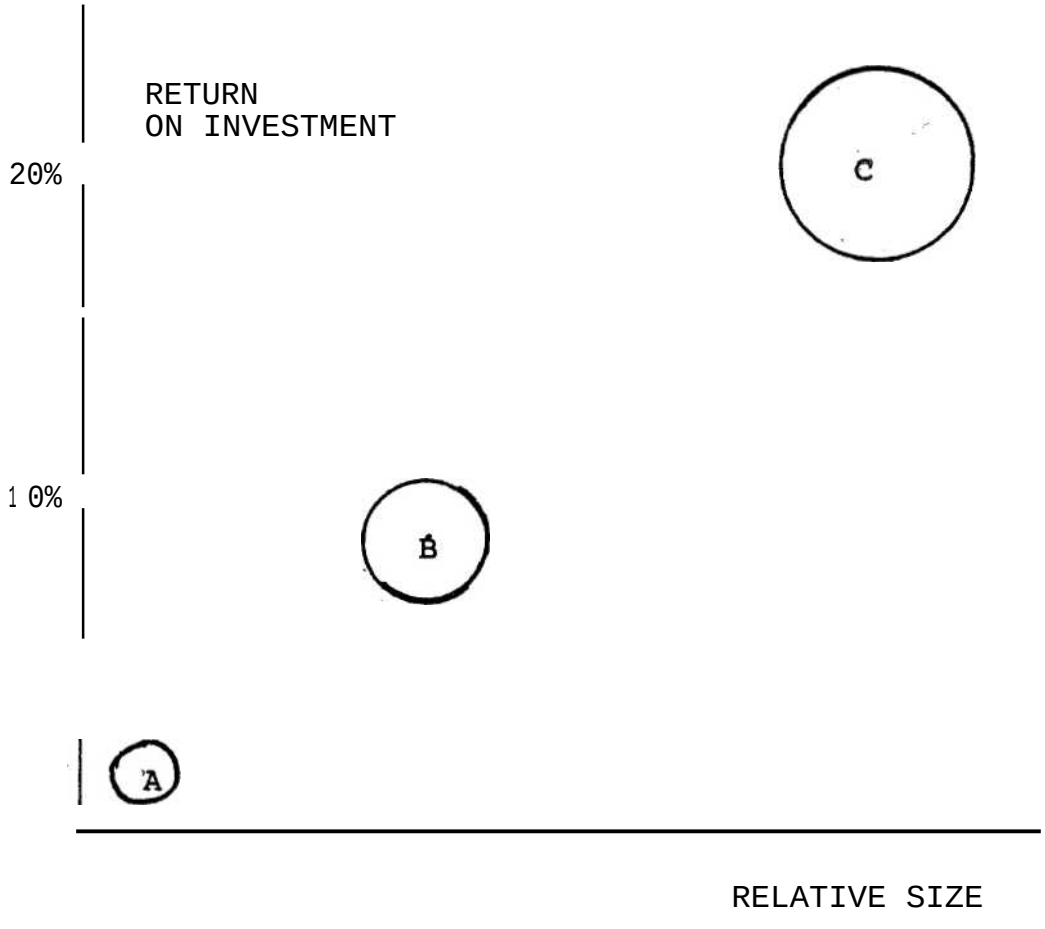
RETURN
ON INVESTMENT
20%
10%
A
B
C
RELATIVE SIZE

RENTS ARE WHAT THE STRATEGY CONCEPT IS ABOUT

STRATEGY CONCERNS DECISIONS AND EVENTS CHARACTERIZED BY IRREVERSABILITY, FUTURITY, AND IMPORTANCE

HIGH RENTS HAVE NO NECESSARY CONNECTION WITH THE CURRENT QUALITY OF MANAGEMENT

- Delta Airlines had a clean balance sheet when interest rates zoomed to 21%
- In 1970, Xerox was often cited as the prototypical well managed firm
- The example of the rolling mill

The Rolling Mill Project:

Investment	$25,000,000
Expected Profit	$4,000,000 /year
Implied ROI (approx.)	16%

Actual Cash Flow	$1,000r000
Accounting ROI	4%
Salvage Value	$10,000,000
PV Cash Flow	$11,000,000

Accounting cost/unit	$1 ,200
Economic cost/unit	$480

THE OPPORTUNITY TO EARN RENTS COMES WITH CHANGE THAT IS UNEXPECTED OR WHICH HAS UNEXPECTED IMPLICATIONS

CHANGES IN TECHNOLOGY

CHANGES IN LAW AND REGULATION

CHANGES IN TASTE AND PREFERENCE

CHANGES IN THE STRATEGIES OF KEY ACTORS

CHANGES IN FACTOR PRICES

CHANGES IN KNOWLEDGE

WHAT KEEPS RENTS FROM BEING COMPETED AWAY?

ISOLATING MECHANISMS:

FACTOR PRICES MUST NOT BE BID UP

- Property rights to specialized assets
- Independence from specialized inputs
- Individual skill and knowledge co-specialized with the firm's assets

ASSETS ARE NOT IMITATED BY COMPETITORS AT COMPARABLE COST

- Legal restraints on competition or imitation
- Discovered quality differences in resources
- Uncertain imitability -- causal ambiguity
- Late mover disadvantage
  - more costly learning
  - negative externality to variety
  - durable goods inertia
  - increased search costs
  - scale deterrence: indivisibility
- Sunk investment in idiosyncratic exchange

GIVEN THIS FRAMEWORK, WHAT IS STRATEGY WORK?

THE IDENTIFICATION OF *THE* SOURCES OF RENTS

Lots of ambiguity and myth

What case analysis is often about

Can be formalized as hypothesis formulation and attempts at refutation

Good theory can help here in enriching our repertoire of hypotheses

THE ANALYSIS OF CHANGE

How will a specific change alter the pattern and strength of relevant isolating mechanisms?

Which institutional arrangements and special resources will be favored by the change, and which will be in jeopardy?

THE DEVELOPMENT OF A RESPONSE TO CHANGE

Creative. versus defensive responses

The theory provides a way of evoking creating responses

IN THIS VIEW STRATEGY WORK IS MORE LIKE RESEARCH AND DEVELOPMENT THAN LIKE PLANNING

EXAMPLES

PERSONAL COMPUTER INDUSTRY

SOFTWARE PIRACY

AIRLINE INDUSTRY

PAY-CABLE TV AND PAY-PER-VIEW

DIRECT VERSUS HYBRED VIDEOTEX

PERSONAL COMPUTER INDUSTRY

THE PERSONAL COMPUTER INDUSTRY IS AN EXAMPLE OF SUDDEN REVOLUTION DUE TO TECHNOLOGICAL CHANGE

THE PERSONAL COMPUTER IS MADE POSSIBLE BY ADVANCES IN LARGE SCALE INTEGRATION, MAKING INEXPENSIVE MICROPROCESSORS AND RAM MEMORY AVAILABLE

THE CONTINUING DECLINE IN RAM COSTS, AND IN THE COST OF MAGNETIC MEMORY, POWER THE DEVELOPMENT OF THE INDUSTRY. THESE DECLINES CAN BE SAFELY PROJECTED TO CONTINUE AT APPROXIMATELY THEIR CURRENT RATES:

RAM prices decline 30% each year

Floppy disk prices decline 25% each year

Hard disk prices decline 20% each year

Home PC Market

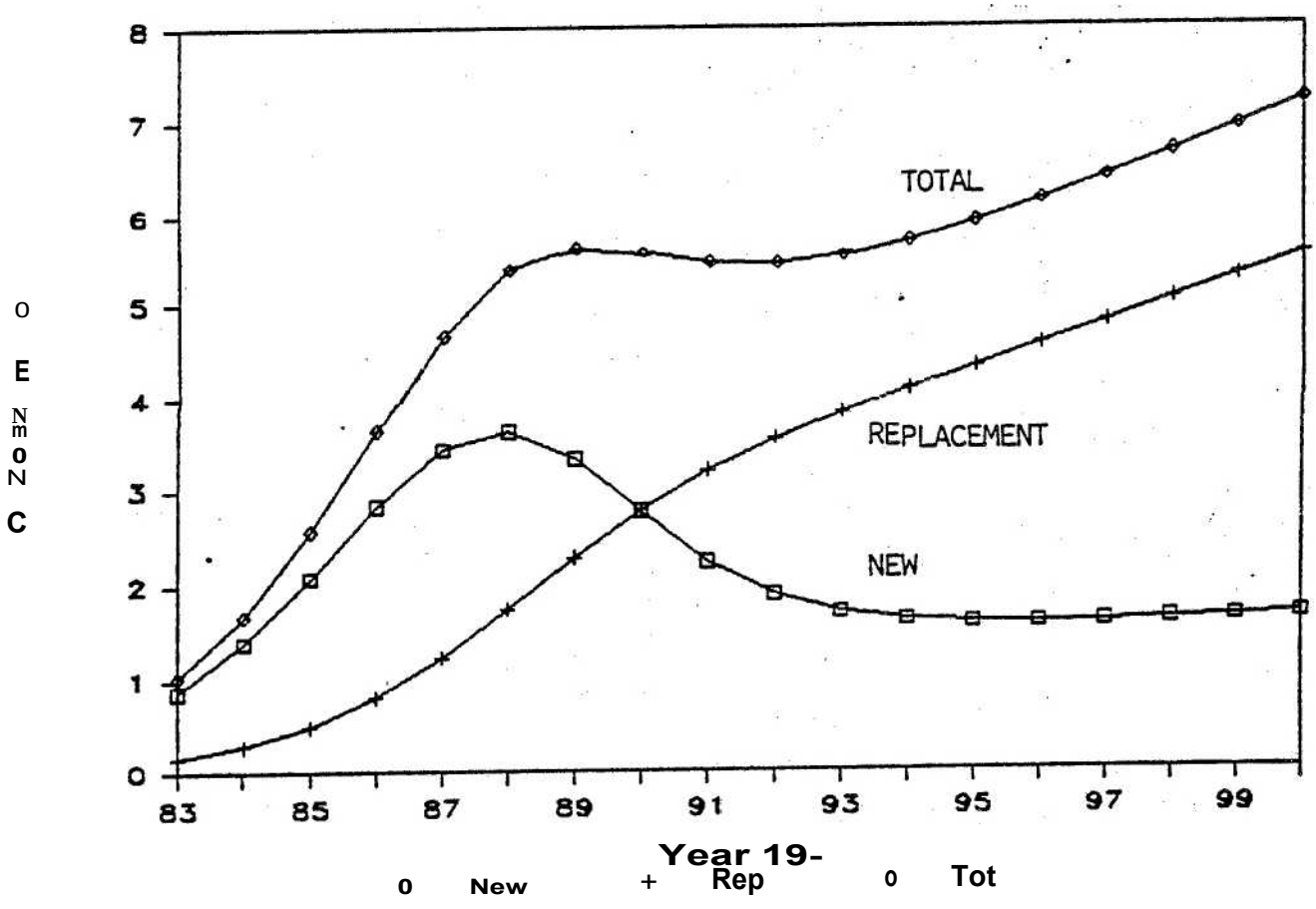

PERSONAL COMPUTERS

BECAUSE PERSONAL COMPUTERS AND SOFTWARE ARE COMPLEMENTARY PRODUCTS, THERE IS A POSITIVE EXTERNALITY ASSOCIATED WITH THE PURCHASE OF EITHER A PERSONAL COMPUTER OR AN ITEM OF SOFTWARE

As if each TV maker had a different standard and TV stations broadcast for only certain brands of TV

Did Apple Computer really comprehend the sources of its early success?

Not a scale economy, not "crowding"

Many engineering-oriented firms find it frustrating that their "better" operating systems and "better" graphics systems find no market

TECHNICAL CHANGE AND DIFFERENT MARKET SEGMENT NEEDS COUNTER BALANCE THE PRESSURE FOR STANDARDIZATION AND INCREASE PRODUCT VARIETY

THE INCREASING SOFTWARE BASE FOR THE POPULAR MACHINES MAKES IT MORE AND MORE DIFFICULT TO JUSTIFY THE REPLACEMENT OF EXISTING EQUIPMENT WITH TECHNOLOGICALLY "IMPROVED" EQUIPMENT

The IBM PC, as a standard, will be with o us for a long time. The Apple II will also endure long past its technologically justified life

Like 525 line TV in the US, the Philips audio cassette, COBOL and FORTRAN

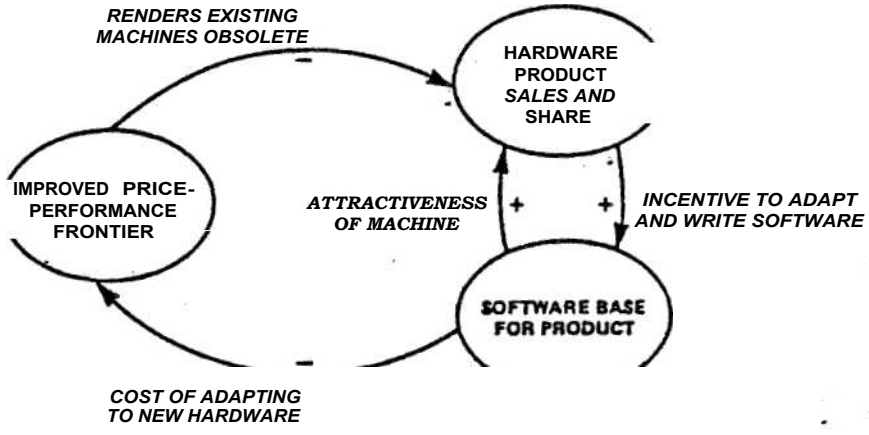

HARDWARE AND SOFTWARE ARE CLOSELY TIED IN THE PERSONAL COMPUTER INDUSTRY

A MACHINE'S ATTRACTIVENESS DEPENDS UPON THE AVAILABLE SOFTWARE BASE, AND THE BASE DEPENDS UPON THE MACHINE'S MARKET SHARE

PERSONAL COMPUTERS

CURRENT DISTRIBUTION SYSTEMS HAVE GROWN UP AROUND THE STRATEGIES OF APPLE AND IBM -- COMPONENTS ASSEMBLED INTO A SYSTEM

Justified as long as system is expensive as long as cost of having too much exceeds the cost of performing the system engineering function at the retail level and the search and evaluation costs imposed on the consumer

BUT FALLING PRODUCT COSTS WILL MAKE FULLY INTEGRATED SYSTEMS AVAILABLE AT CONSUMER PRICES. THIS WILL SIMPLIFY THE RETAIL TRANSACTION AND MAKE IT POSSIBLE TO DISTRIBUTE POWER PERSONAL COMPUTERS THROUGH SIMPLE CHANNELS

MAJOR REVOLUTION STILL TO COME

SPILLOVER INTO WORD-PROCESSING

IBM and Xerox still have word processing strategies tied to complex office of the future visions. High profit scenarios that favor these systems makers.

When the price of a stand-alone PC-based word processor drops to, say, $2500, we will see the simple replacement of the typewriter on efficiency grounds

SPILLBACK INTO COMPUTING

The market for such a machine will be in the millions per year and its successful producer may quickly become the world's largest "computer" maker

AIRLINE DEREGULATION

A TEXTBOOK CASE IN SUDDEN EXOGENEOUS CHANGE

BEFORE DEREGULATION

- No new entry
- Prices fixed by CAB
  - profit on long haul
  - loss on short haul
- Regulated ROE = debt guarantee

AFTER DEREGULATION

- Long-haul high-density routes are commodities
- Short-haul or low-density routes profitable
- New entry by low cost carriers
  - Non-union wage arrangements
- New risks associated with aircraft purchase

AIRLINE DEREGULATION

THE FASCINATING ASPECT OF THE AIRLINE STORY IS THE DIFFICULTY THE CARRIERS HAD IN UNDERSTANDING THE NEW REGIME

Carriers went after long-haul routes, dropped short haul routes, went after lots of new routes only loosely related to their networks, and ordered expensive new equipment at a time when interest rates were 18%

I CALL THESE RESPONSES "PENT UP STRATEGIES" BECAUSE THEY EXPRESS LONG-STANDING DESIRES THAT WERE BLOCKED BY REGULATION. WITH DEREGULATION, THESE MOVES WERE FINALLY ALLOWED, BUT WERE ALSO NO LONGER APPROPRIATE.

RELATIVE AIR FARES 1977-1983

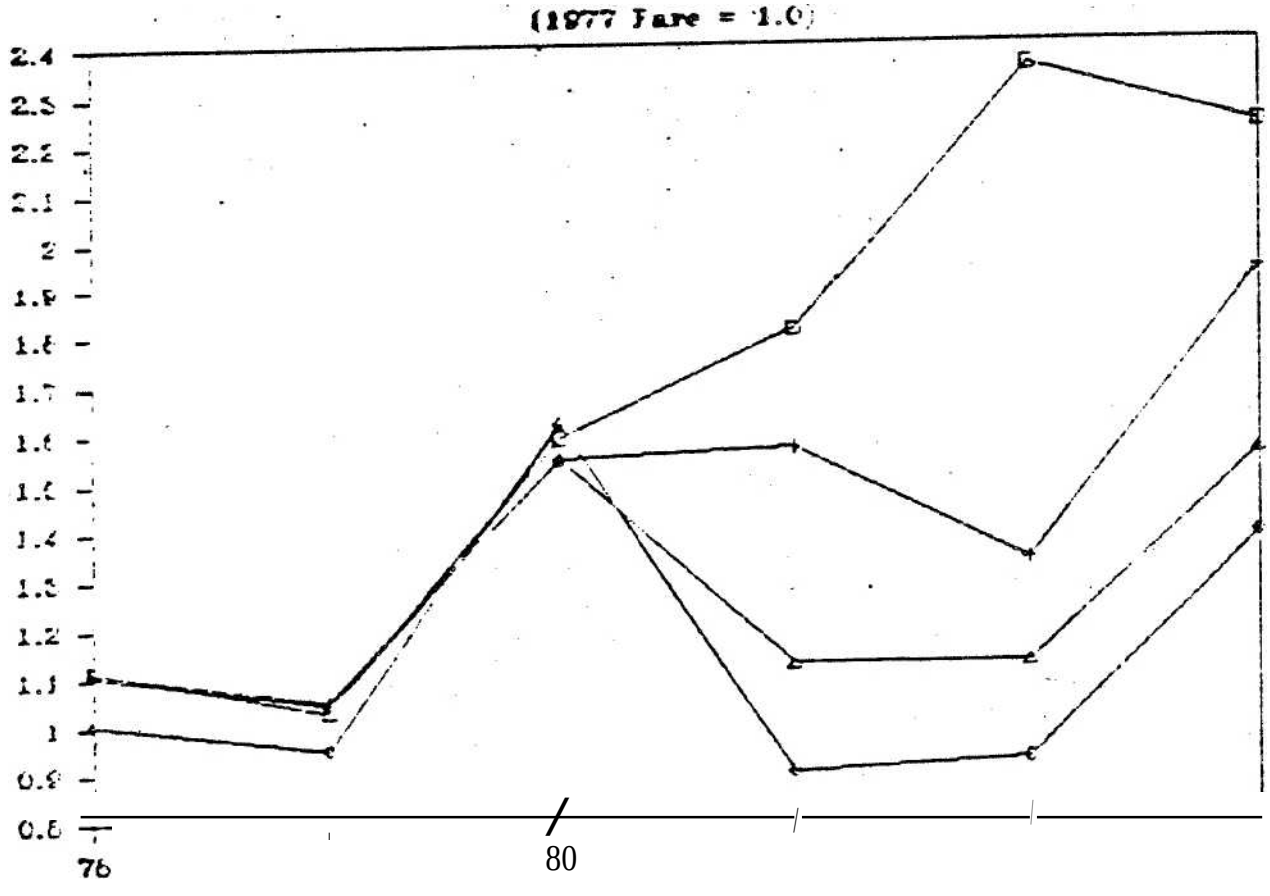

c S-L + L-L ~ S-B A L-B

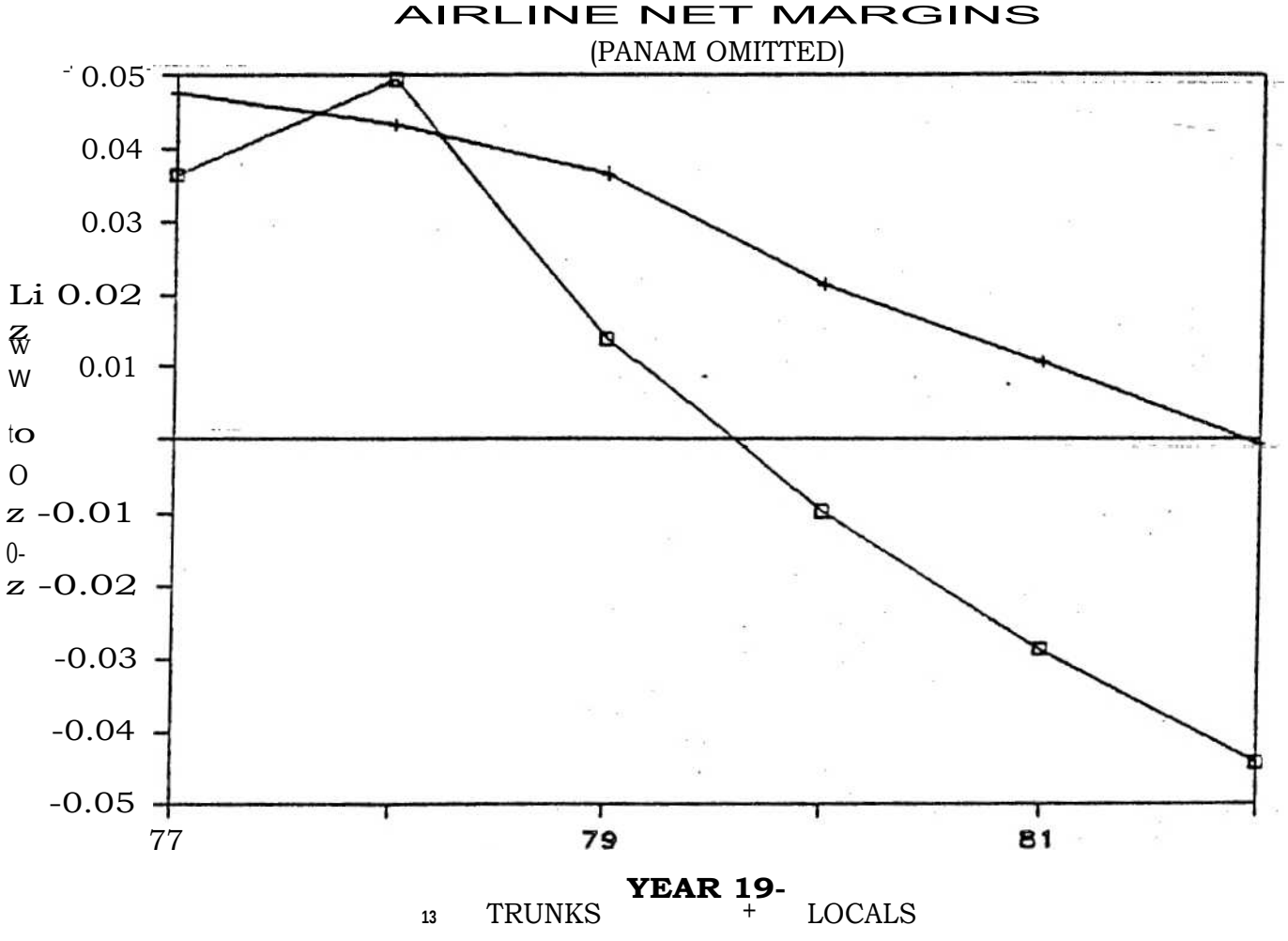
AIRLINE NET MARGINS
(PANAM OMITTED)
0.05
0.04
0.03
0.02
0.01
-0.01
-0.02
-0.03
-0.04
-0.05
77
79
81
YEAR 19-
TRUNKS
LOCALS

AIRLINE DEREGULATION

AFTER A PERIOD IN WHICH RENTS ARE EARNED BY THOSE WITH SHORT-HAUL LOW-DENSITY ROUTES, THE MAJOR ASYMMETRY WILL BE IN WAGE CONTRACTS

THREE COMPONENTS OF VALUE

AIRCRAFT	$1000
ROUTES AND REPUTATION	500
WAGE CONTRACTS	-600
LESS DEBT	-800
NET WORTH	100

THE ONLY REAL STRATEGIC 'ISSUE FACING LARGE CARRIERS WILL BE HOW TO ALTER THEIR WAGE AGREEMENTS

Bankruptcy

Start new ventures and shift equipment

Give stockholder's shares in leasing company that hold's equipment

ESOT and other forms of employee ownership

TWO-WAY CABLE TV AND VIDEOTEX HYBRIDS

THERE ARE TWO BASIC TECHNOLOGIES FOR ACHIEVING TWO-WAY COMMUNICATION TO ENABLE INTERACTIVE TV AND/OR VIDEOTEX VIA CABLE:

DIRECT TWO-WAY CABLE: NEW CABLE SYSTEMS ALLOWING SIGNALS TO ALSO MOVE BACK FROM CONSUMER TO CABLE OPERATOR

HYBRID CABLE: CABLE SIGNALS TO CONSUMER, TELEPHONE SYSTEM BACKLINK TO CABLE OPERATOR

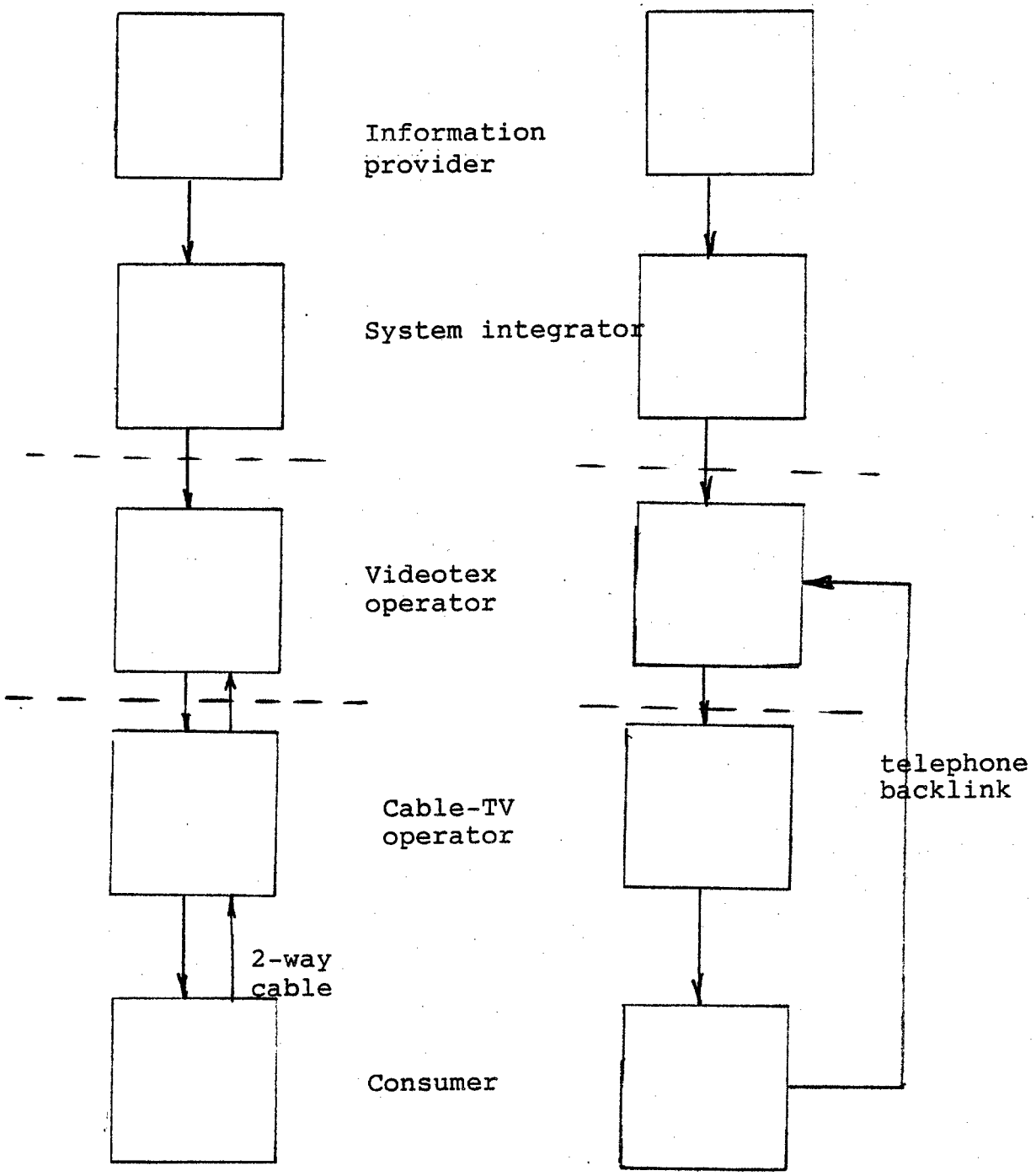
Information provider
System integrator
Videotex operator
Cable-TV operator
2-way cable
Consumer
telephone backlink

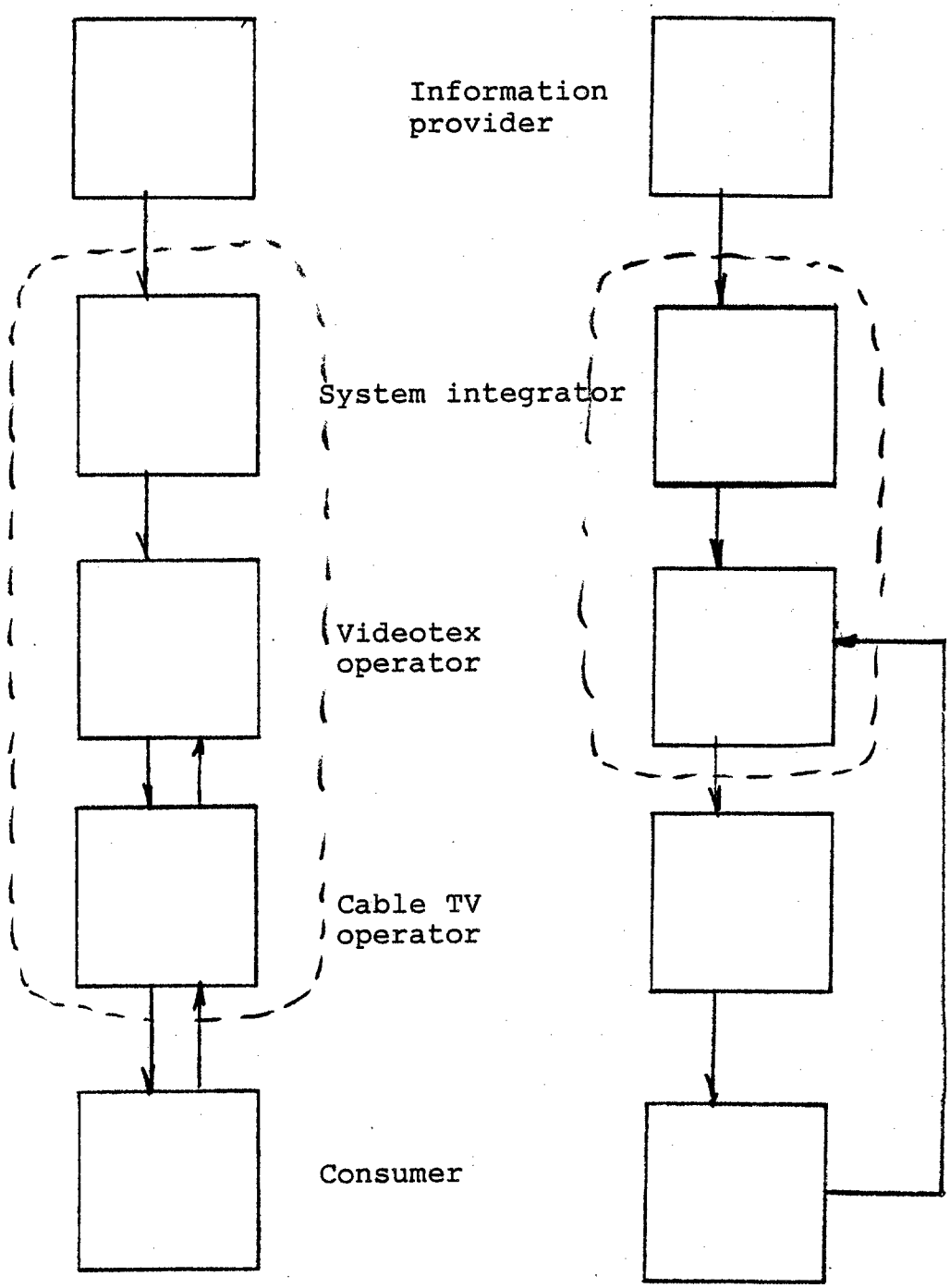
Information provider
System integrator
Videotex operator
Cable TV operator
Consumer

TWO-WAY CABLE TV AND VIDEOTEX HYBRIDS

THEREFORE, UNDER THE TWO-WAY SCENARIO, CABLE OPERATORS ARE THE VIDEOTEX OPERATORS

UNDER THE HYBRID SCENARIO, THESE OPERATORS MAY BE DISTINCT ENTITIES

THESE OBSERVATIONS HAVE CLEAR IMPLICATIONS FOR CURRENT CABLE OPERATORS, AND FOR THOSE POTENTIAL VIDEOTEX OPERATORS WHO ARE NOT CABLE OPERATORS

CONCLUSIONS

THE INSTITUTIONAL VIEW OF STRATEGY PROVIDES A WAY OF DEALING WITH STRATEGY ISSUES THAT

- Brings new theory to bear
- Alters the unit of analysis
- Conjoins the scholarly and the practical