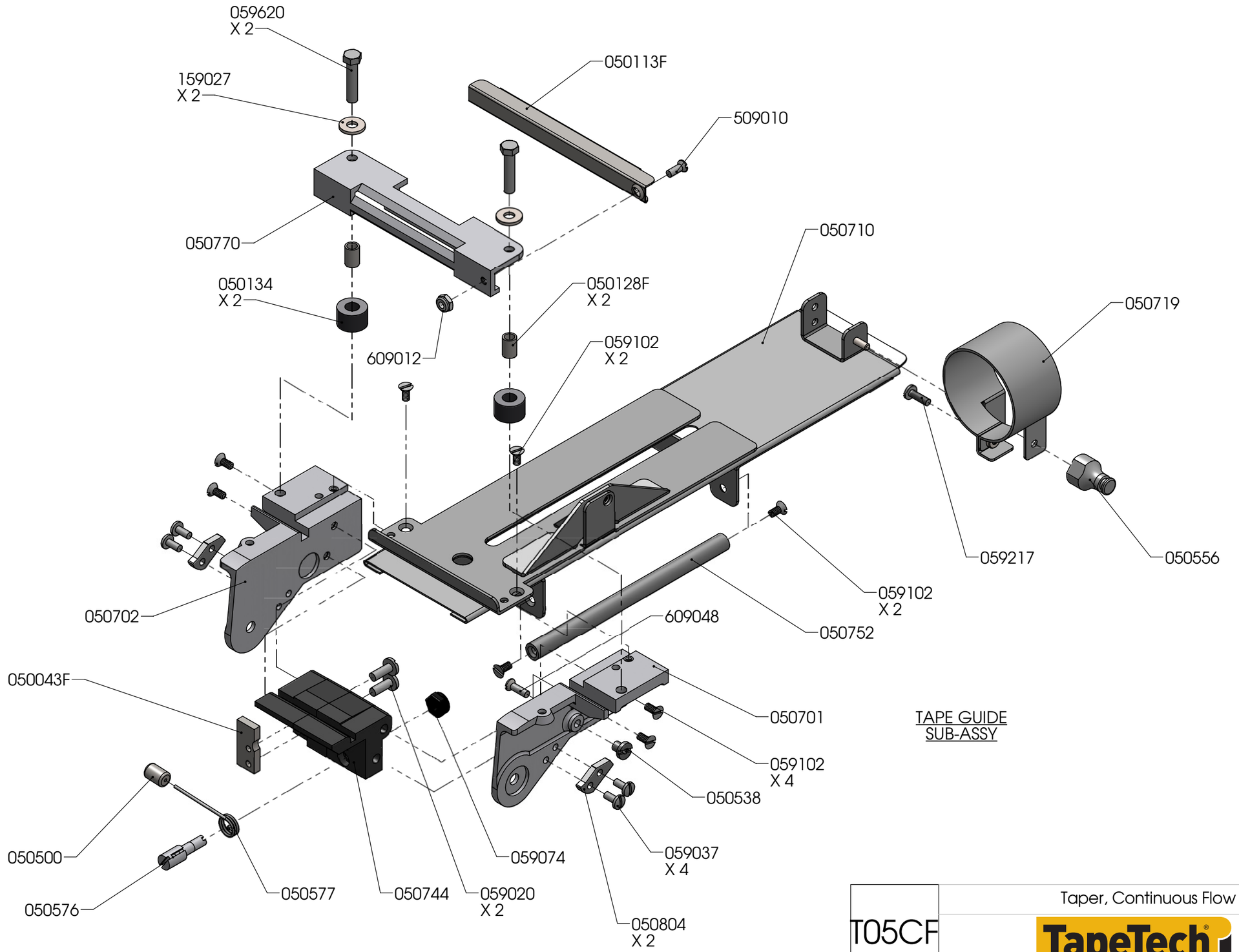

TAPE GUIDE
SUB-ASSY

T05CF	Taper, Continuous Flow TapeTech® PROFESSIONAL DRYWALL FINISHING TOOLS	REV. B

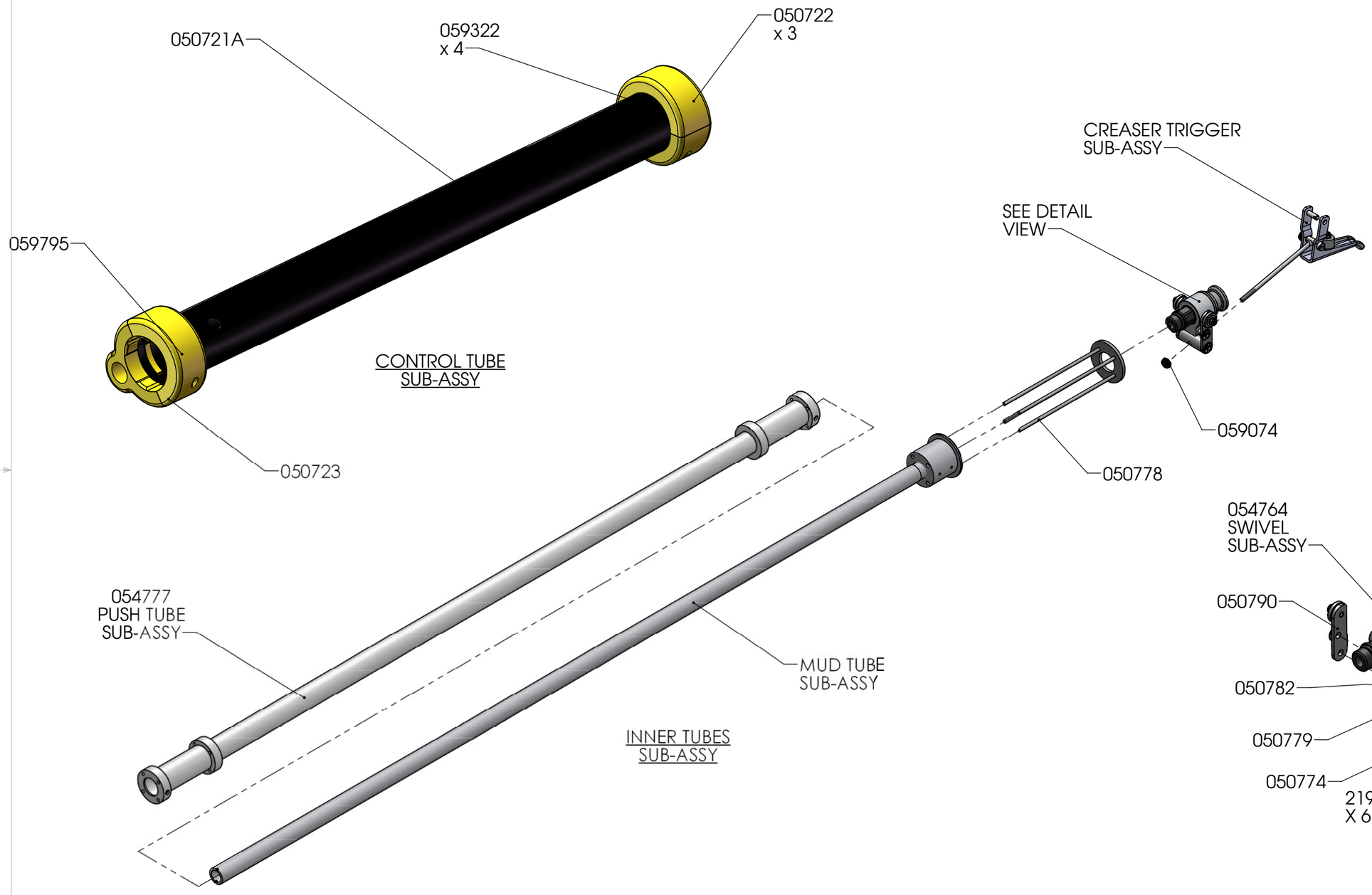

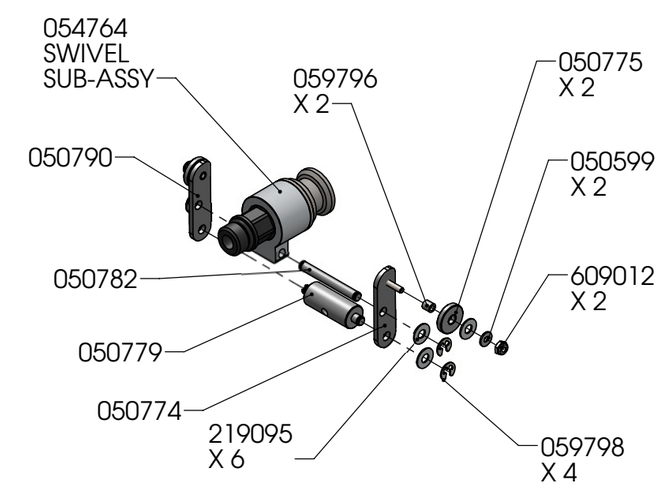

T05CF	Taper, Continuous Flow	REV.
	TapeTech® PROFESSIONAL DRYWALL FINISHING TOOLS	B

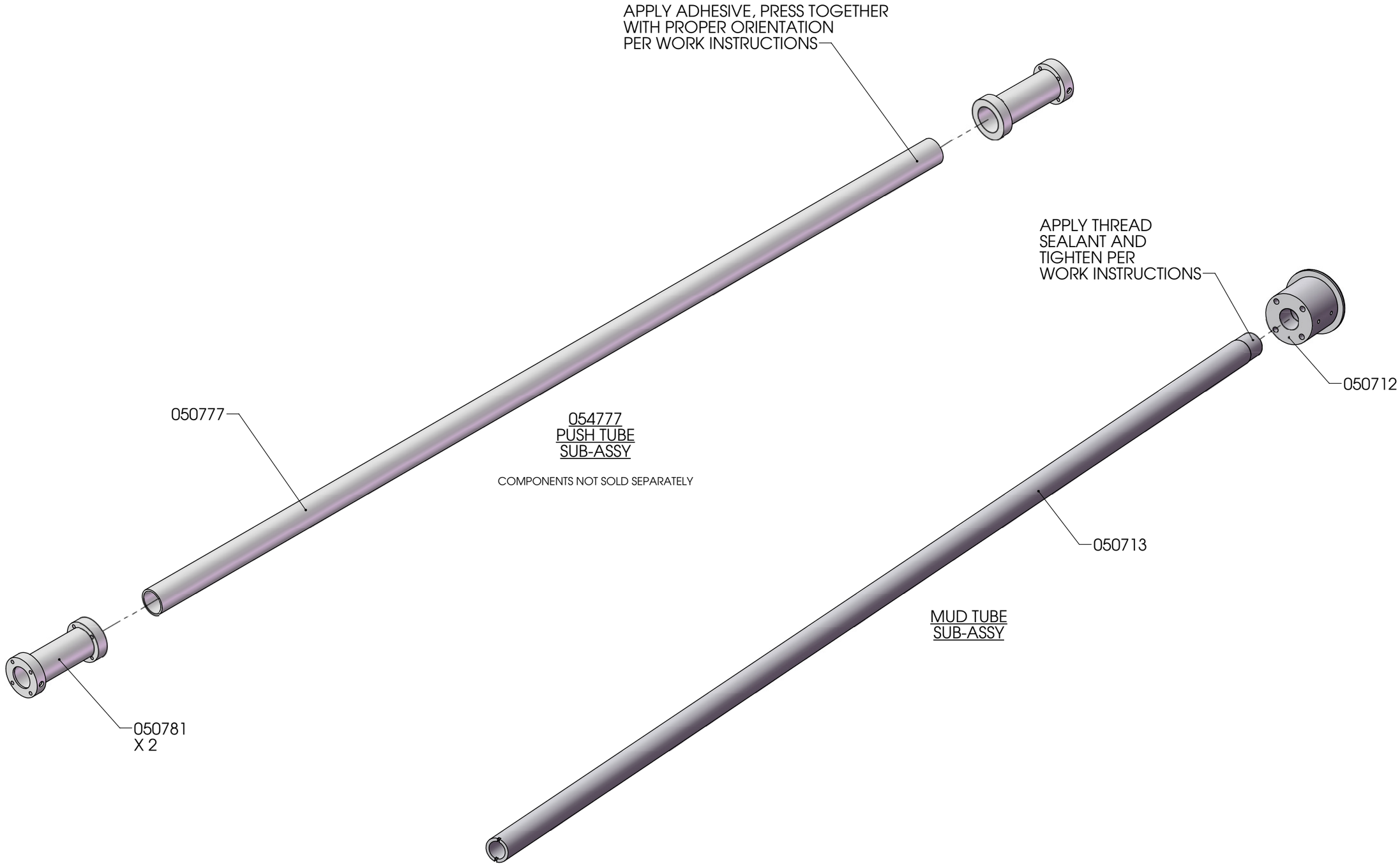

T05CF	Taper, Continuous Flow TapeTech® PROFESSIONAL DRYWALL FINISHING TOOLS	REV. B

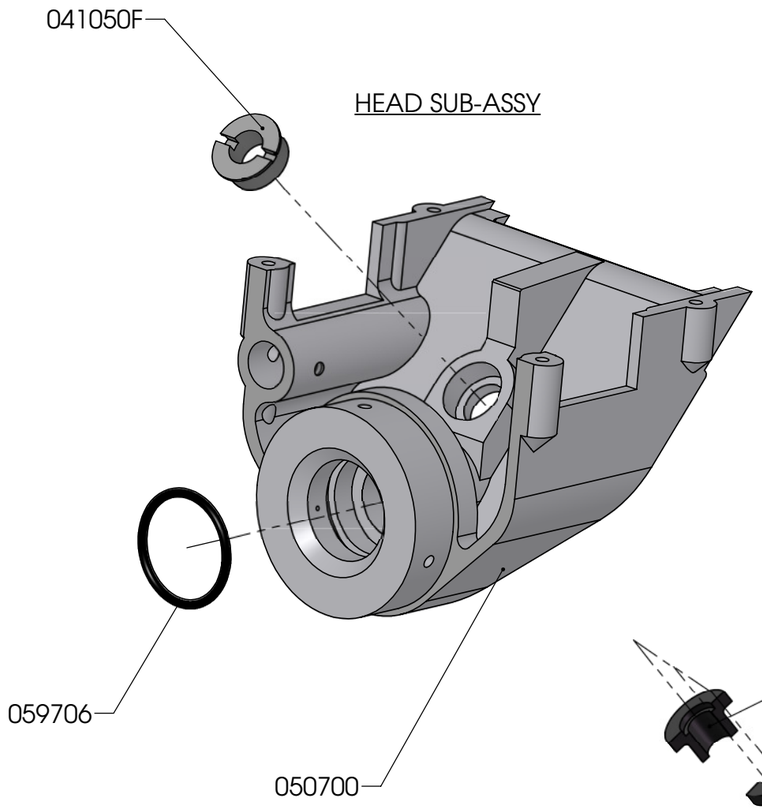

HEAD SUB-ASSY

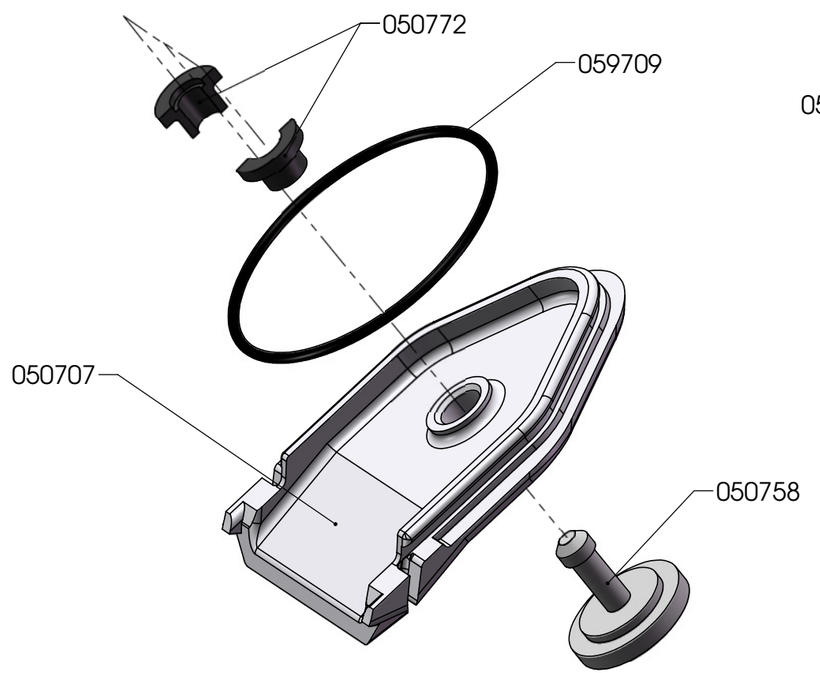

COVER SUB-ASSY

SPOOL MOUNT
SUB-ASSY

T05CF	Taper, Continuous Flow TapeTech® PROFESSIONAL DRYWALL FINISHING TOOLS	REV. B

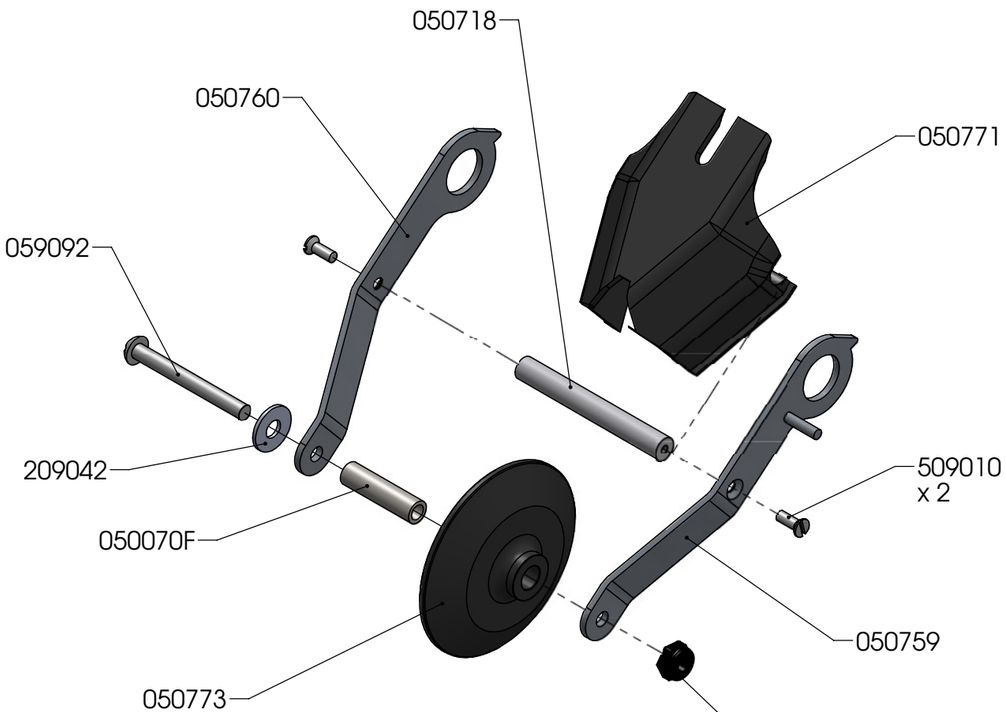

CREASER WHEEL
SUB-ASSY

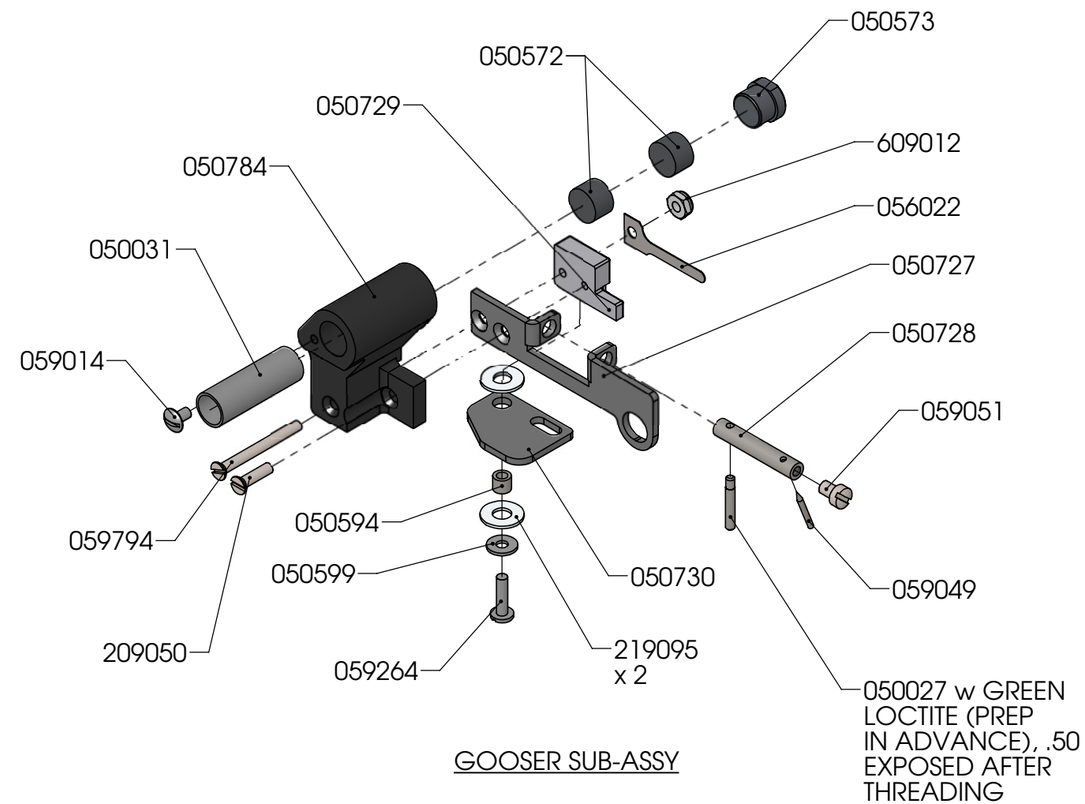

GOOSER SUB-ASSY

T05CF	Taper, Continuous Flow TapeTech® PROFESSIONAL DRYWALL FINISHING TOOLS	REV. B

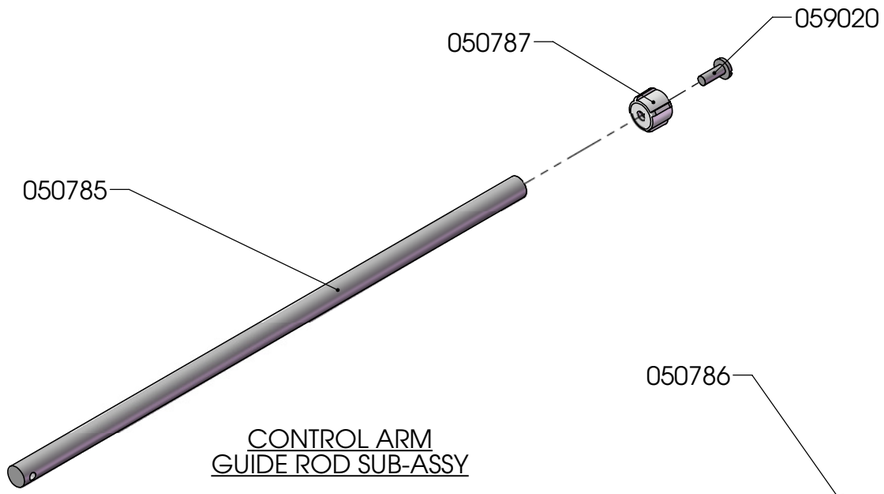

CONTROL ARM
GUIDE ROD SUB-ASSY

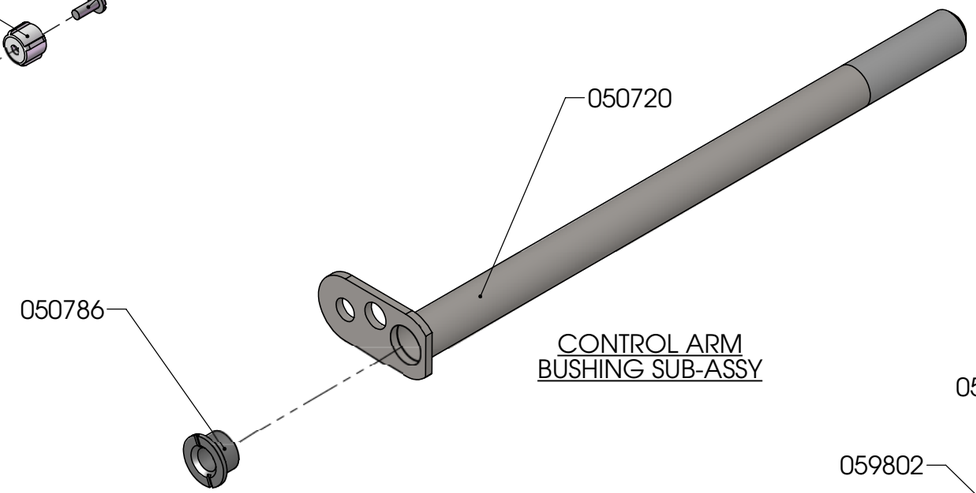

CONTROL ARM
BUSHING SUB-ASSY

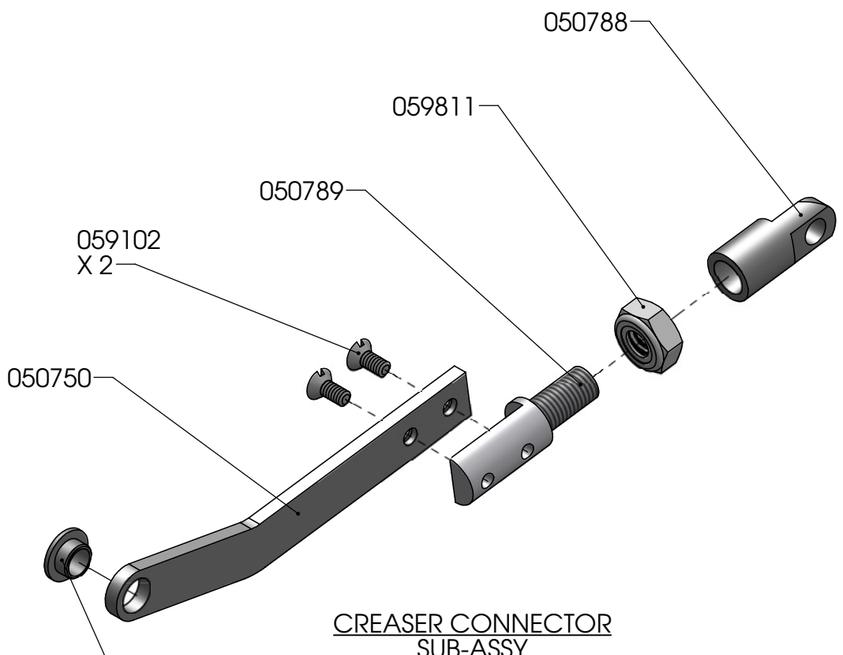

CREASER CONNECTOR
SUB-ASSY

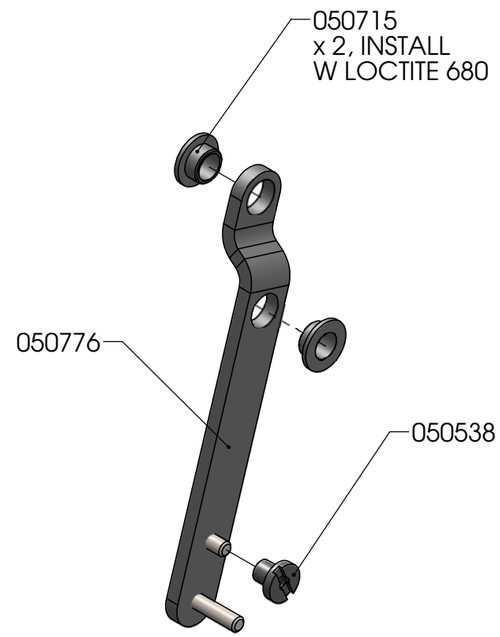

CREASER PIVOT
LINK SUB-ASSY

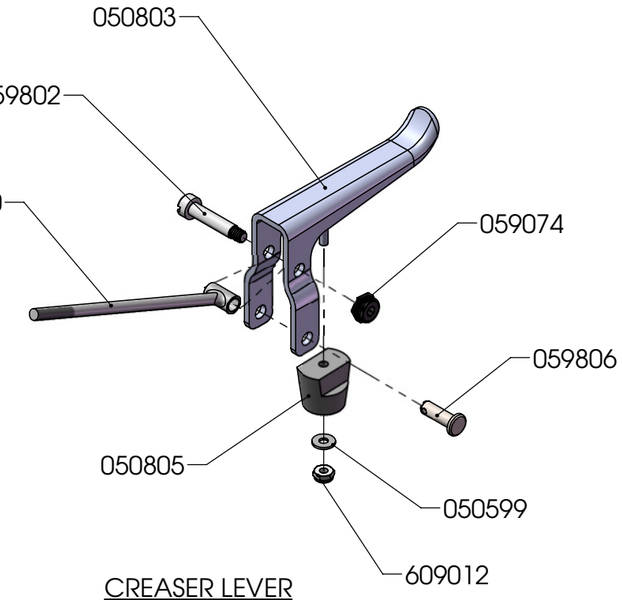

CREASER LEVER
SUB-ASSY

T05CF	Taper, Continuous Flow TapeTech® PROFESSIONAL DRYWALL FINISHING TOOLS	REV. B