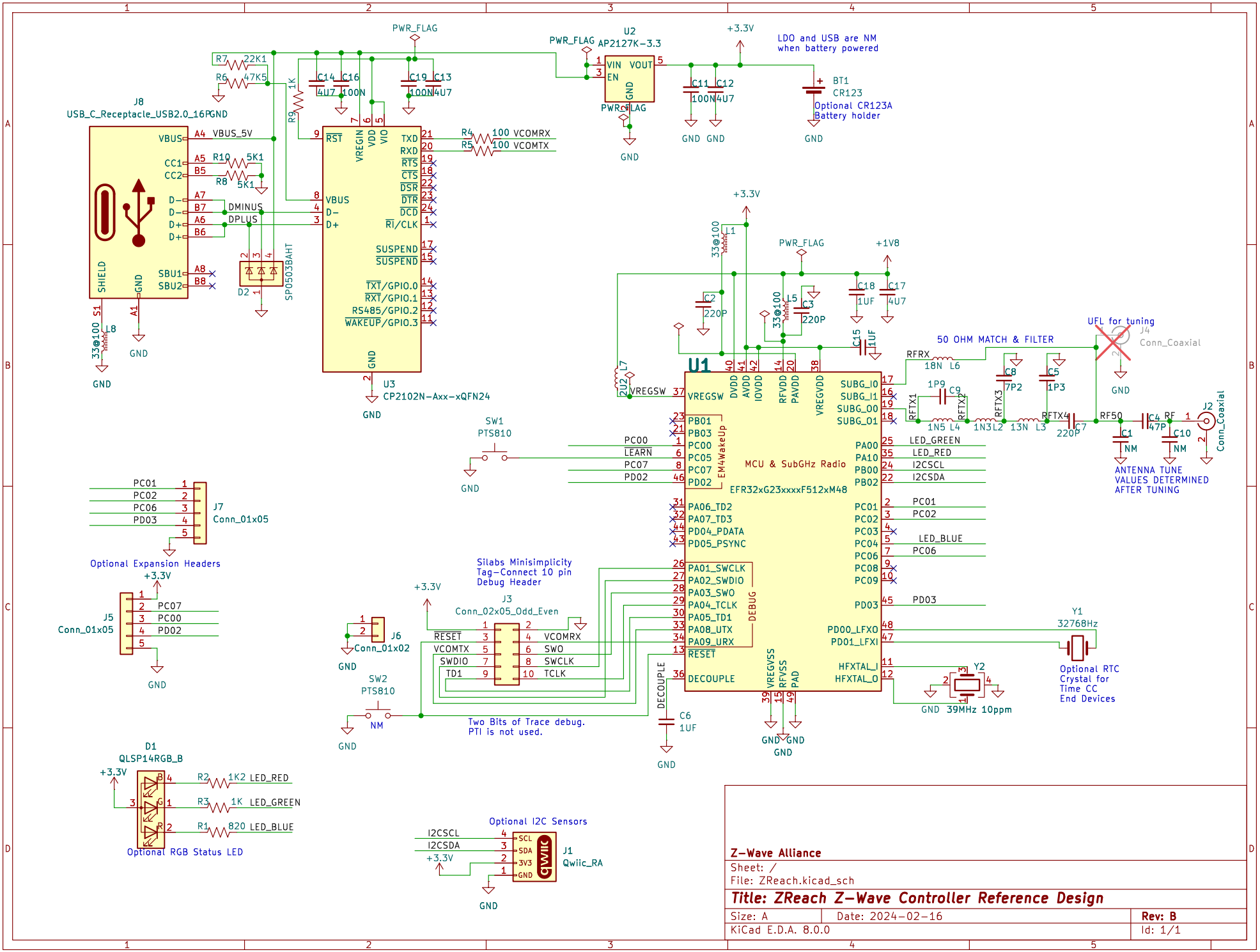
J8
USB_C_Receptacle_USB2.0_16P
U3
CP2102N-Axx-xQFN24
U2
AP2127K-3.3
LDO and USB are NM when battery powered
BT1
CR123
Optional CR123A Battery holder
U1
MCU & SubGHz Radio
EFR32xG23xxxxF512xM48
50 OHM MATCH & FILTER
UFL for tuning
J4
Conn_Coaxial
J2
Conn_Coaxial
ANTENNA TUNE VALUES DETERMINED AFTER TUNING
SW1
PTS810
J7
Conn_01x05
Optional Expansion Headers
J5
Conn_01x05
Silabs Minisimplicity Tag-Connect 10 pin Debug Header
J3
Conn_02x05_Odd_Even
J6
Conn_01x02
SW2
PTS810
Two Bits of Trace debug. PTI is not used.
Y1
32768Hz
Optional RTC Crystal for Time CC End Devices
Y2
39MHz 10ppm
D1
QLSP14RGB_B
Optional RGB Status LED
Optional I2C Sensors
J1
Qwiic_RA
Z-Wave Alliance
Sheet: /
File: ZReach.kicad_sch
Title: ZReach Z-Wave Controller Reference Design
Size: A
Date: 2024-02-16
Rev: B
KiCad E.D.A. 8.0.0
Id: 1/1