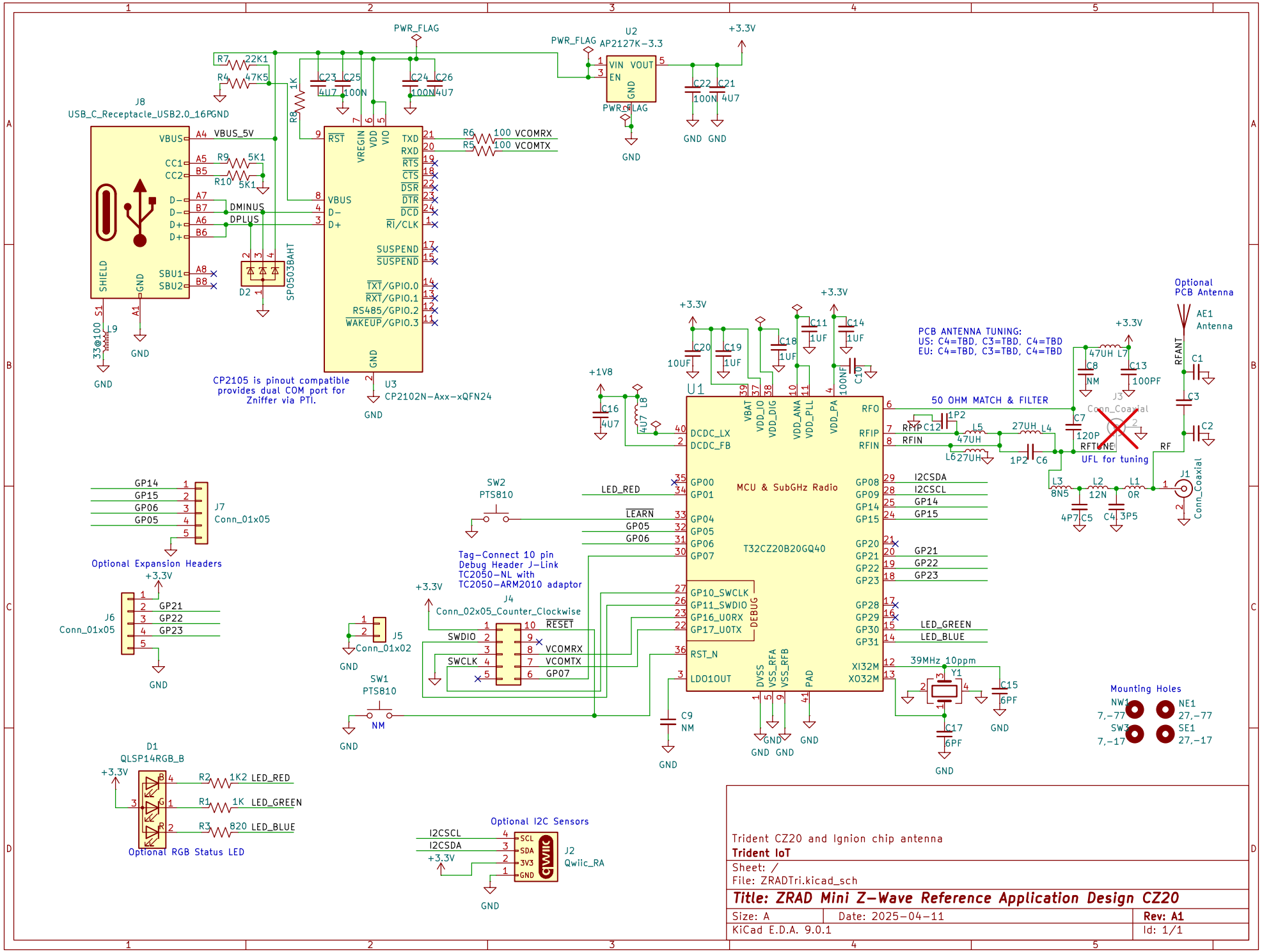
J8
USB_C_Receptacle_USB2.0_16P
VBUS_5V
DMINUS
DPLUS
SP0503BAHT
D2
U3
CP2102N-Axx-xQFN24
CP2105 is pinout compatible provides dual COM port for Zniffer via PTI.
U2
AP2127K-3.3
PWR_FLAG
+3.3V
+1V8
U1
T32CZ20B20GQ40
MCU & SubGHz Radio
PCB ANTENNA TUNING:
US: C4=TBD, C3=TBD, C4=TBD
EU: C4=TBD, C3=TBD, C4=TBD
50 OHM MATCH & FILTER
UFL for tuning
Optional PCB Antenna
AE1
Antenna
J1
Conn_Coaxial
39MHz 10ppm
Y1
Mounting Holes
NW1 7,-77
NE1 27,-77
SW1 7,-17
SE1 27,-17
J7
Conn_01x05
Optional Expansion Headers
J6
Conn_01x05
SW2
PTS810
LED_RED
LEARN
GP05
GP06
Tag-Connect 10 pin Debug Header J-Link TC2050-NL with TC2050-ARM2010 adaptor
J4
Conn_02x05_Counter_Clockwise
RESET
SWDIO
SWCLK
VCOMRX
VCOMTX
GP07
J5
Conn_01x02
SW1
PTS810
NM
D1
QLSP14RGB_B
Optional RGB Status LED
LED_RED
LED_GREEN
LED_BLUE
Optional I2C Sensors
I2CSCL
I2CSDA
J2
Qwiic_RA
Trident CZ20 and Ignion chip antenna
Trident IoT
Sheet: /
File: ZRADTri.kicad_sch
Title: ZRAD Mini Z-Wave Reference Application Design CZ20
Size: A
Date: 2025-04-11
Rev: A1
KiCad E.D.A. 9.0.1
Id: 1/1