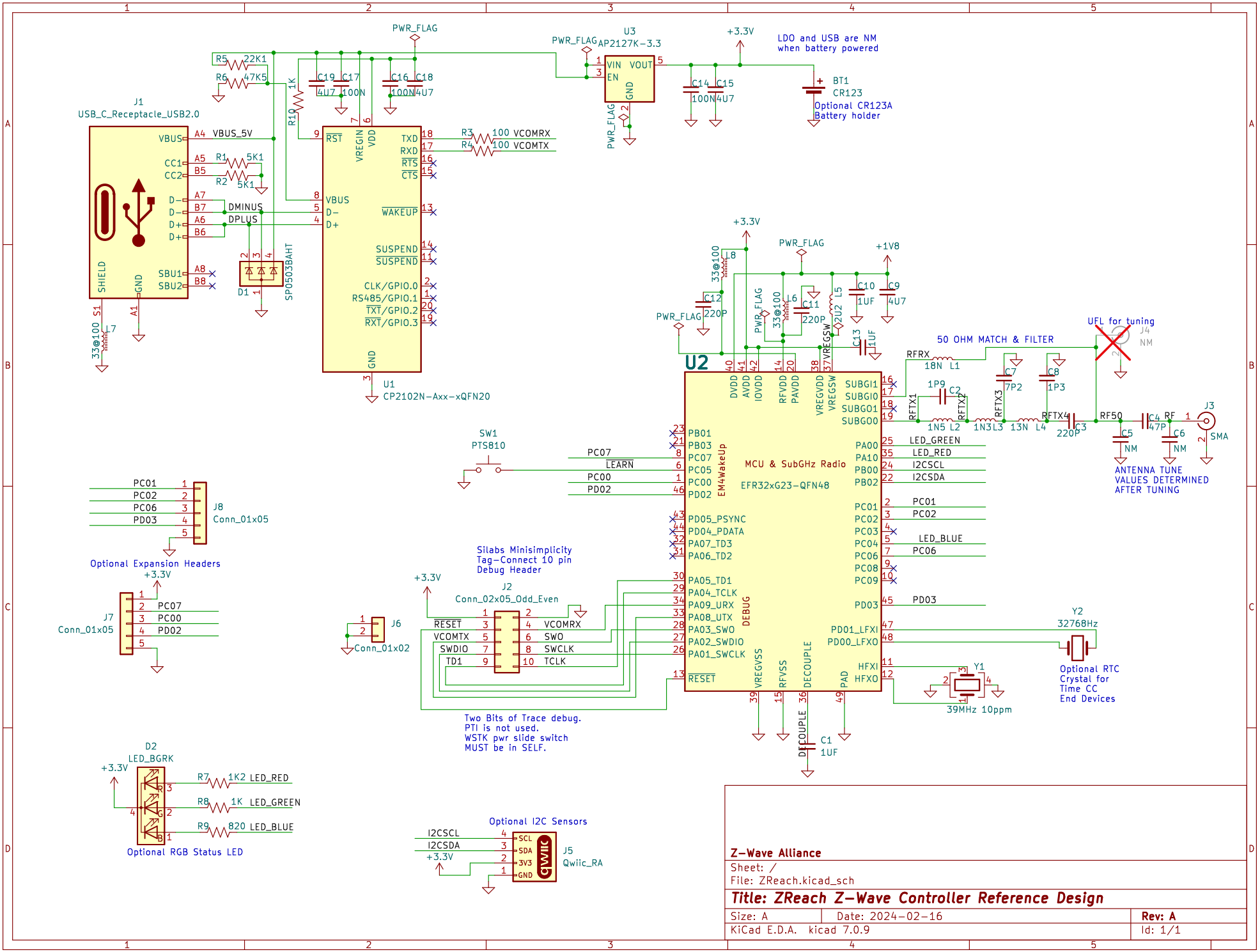
J1
USB_C_Receptacle_USB2.0
VBUS
CC1
CC2
D-
D-
D+
D+
SHIELD
GND
SBU1
SBU2
A4 VBUS_5V
A5 R1 5K1
B5 R2 5K1
A7 DMINUS
B7
A6 DPLUS
B6
A8
B8
A1
S1
33@100 L7
D1
SP0503BAHT
R5 22K1
R6 47K5
R10 1K
C19 C17
4U7 100N
C16 C18
100N 4U7
PWR_FLAG
U1
CP2102N-Axx-xQFN20
RST
VREGIN
VDD
VBUS
D-
D+
GND
TXD
RXD
RTS
CTS
WAKEUP
SUSPEND
SUSPEND
CLK/GPIO.0
RS485/GPIO.1
TXT/GPIO.2
RXT/GPIO.3
R3 100 VCOMRX
R4 100 VCOMTX
U3
AP2127K-3.3
VIN
VOUT
EN
GND
PWR_FLAG
+3.3V
C14 C15
100N 4U7
LDO and USB are NM
when battery powered
BT1
CR123
Optional CR123A
Battery holder
U2
EFR32xG23-QFN48
MCU & SubGHz Radio
EM4WakeUp
DEBUG
DVDD
AVDD
IOVDD
RFVDD
PAVDD
VREGVDD
VREGSW
VREGSW
SUBGI1
SUBGI0
SUBGO1
SUBGO0
PB01
PB03
PC07
PC05
PC00
PD02
PD05_PSYNC
PD04_PDATA
PA07_TD3
PA06_TD2
PA05_TD1
PA04_TCLK
PA09_URX
PA08_UTX
PA03_SWO
PA02_SWDIO
PA01_SWCLK
RESET
PA00
PA10
PB00
PB02
PC01
PC02
PC03
PC04
PC06
PC08
PC09
PD03
PD01_LFXI
PD00_LFXO
HFXI
HFXO
VREGVSS
RFVSS
DECOUPLE
PAD
LED_GREEN
LED_RED
I2CSCL
I2CSDA
LED_BLUE
PC06
PD03
C12 220P
L8 33@100
L6 33@100
C11 220P
L5 2U2
C13 1UF
C10 1UF
C9 4U7
+1V8
50 OHM MATCH & FILTER
RFRX
18N L1
1P9 C2
RFTX1
RFTX2
1N5 L2
1N3 L3
RFTX3
C7 7P2
13N L4
RFTX4
C8 1P3
C3 220P
RF50
C5 NM
C4 47P
C6 NM
RF
J3
SMA
UFL for tuning
J4
NM
ANTENNA TUNE
VALUES DETERMINED
AFTER TUNING
SW1
PTS810
PC07
LEARN
PC00
PD02
J8
Conn_01x05
PC01
PC02
PC06
PD03
Optional Expansion Headers
J7
Conn_01x05
PC07
PC00
PD02
J6
Conn_01x02
Silabs Minisimplicity
Tag-Connect 10 pin
Debug Header
J2
Conn_02x05_Odd_Even
RESET
VCOMTX
SWDIO
TD1
VCOMRX
SWO
SWCLK
TCLK
Two Bits of Trace debug.
PTI is not used.
WSTK pwr slide switch
MUST be in SELF.
Y2
32768Hz
Optional RTC
Crystal for
Time CC
End Devices
Y1
39MHz 10ppm
C1
1UF
D2
LED_BGRK
R7 1K2 LED_RED
R8 1K LED_GREEN
R9 820 LED_BLUE
Optional RGB Status LED
Optional I2C Sensors
I2CSCL
I2CSDA
SCL
SDA
3V3
GND
J5
Qwiic_RA
Z-Wave Alliance
Sheet: /
File: ZReach.kicad_sch
Title: ZReach Z-Wave Controller Reference Design
Size: A
Date: 2024-02-16
Rev: A
KiCad E.D.A. kicad 7.0.9
Id: 1/1