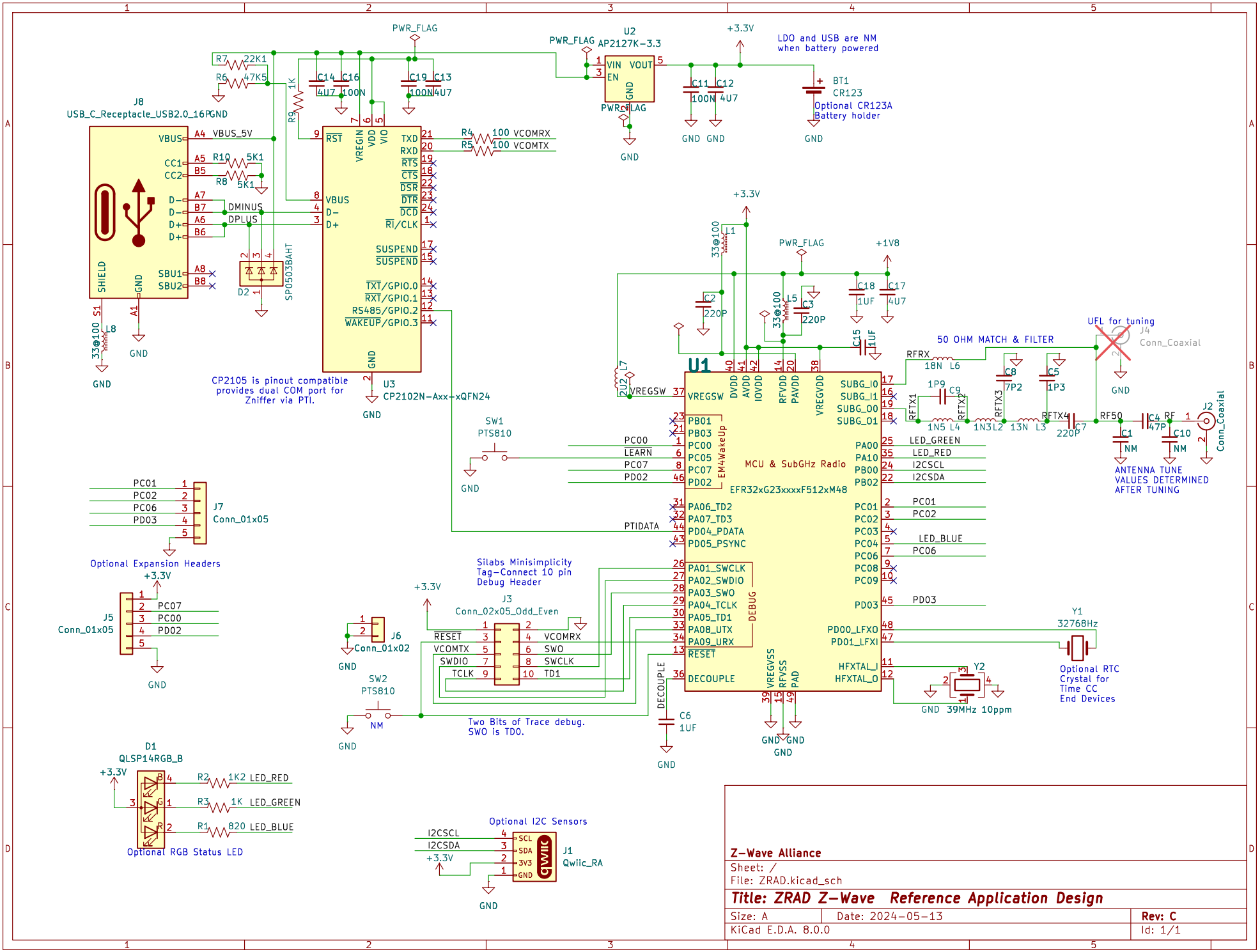

Z-Wave Alliance

Sheet: /

File: ZRAD.kicad_sch

Title: ZRAD Z-Wave Reference Application Design

Size: A	Date: 2024-05-13	Rev: C
KiCad E.D.A. 8.0.0		Id: 1/1