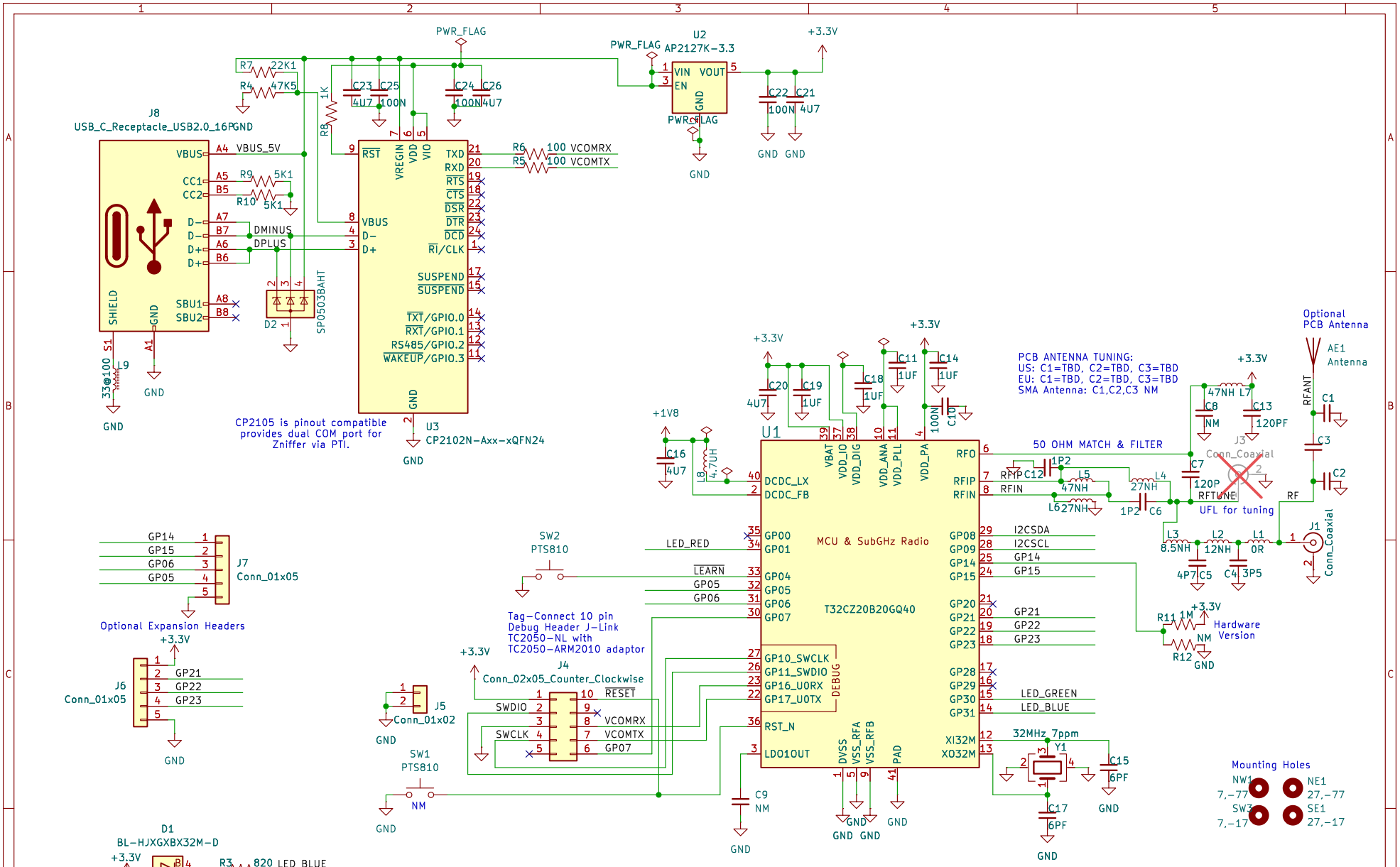
J8
USB_C_Receptacle_USB2.0_16P
VBUS_5V
DMINUS
DPLUS
SP0503BAHT
D2
U3
CP2102N-Axx-xQFN24
CP2105 is pinout compatible provides dual COM port for Zniffer via PTI.
U2
AP2127K-3.3
PWR_FLAG
+3.3V
+1V8
U1
MCU & SubGHz Radio
T32CZ20B20GQ40
50 OHM MATCH & FILTER
PCB ANTENNA TUNING:
US: C1=TBD, C2=TBD, C3=TBD
EU: C1=TBD, C2=TBD, C3=TBD
SMA Antenna: C1,C2,C3 NM
Optional PCB Antenna
AE1 Antenna
UFL for tuning
Hardware Version
32MHz 7ppm
Mounting Holes
Optional Expansion Headers
J7 Conn_01x05
J6 Conn_01x05
J5 Conn_01x02
J4 Conn_02x05_Counter_Clockwise
Tag-Connect 10 pin Debug Header J-Link TC2050-NL with TC2050-ARM2010 adaptor
SW2 PTS810
SW1 PTS810
D1 BL-HJXGXBX32M-D
Optional RGB Status LED
Optional I2C Sensors
J2 Qwiic_RA
Trident CZ20 Z-Wave MCU
Trident IoT
Sheet: /
File: ZRADTri.kicad_sch
Title: ZRAD Mini Z-Wave Reference Application Design CZ20
Size: A
Date: 2025-06-30
Rev: B
KiCad E.D.A. 9.0.2
Id: 1/1