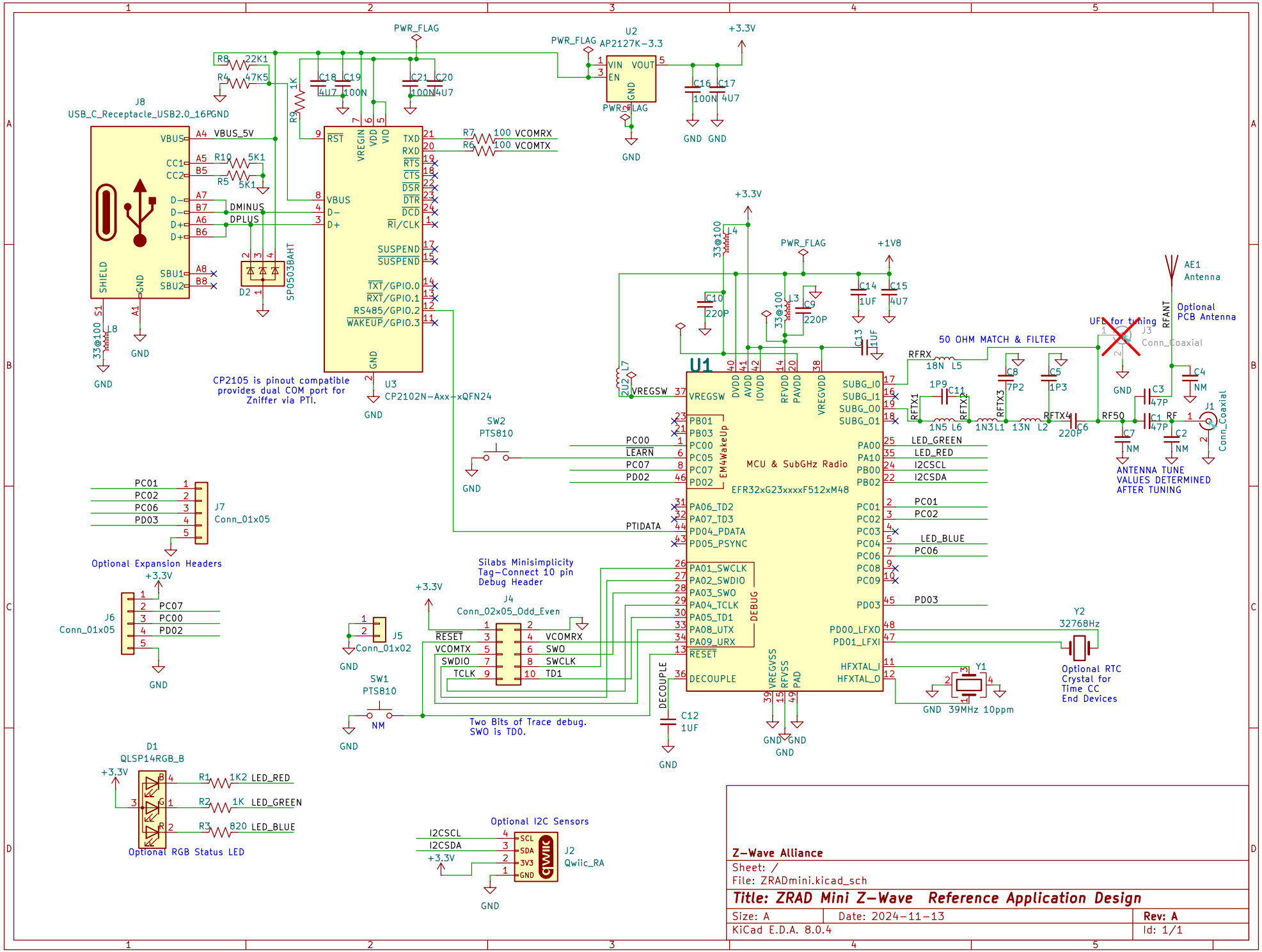
J8
USB_C_Receptacle_USB2.0_16P
VBUS_5V
DMINUS
DPLUS
SP0503BAHT
D2
U3
CP2102N-Axx-xQFN24
CP2105 is pinout compatible provides dual COM port for Zniffer via PTI.
U2
AP2127K-3.3
PWR_FLAG
+3.3V
+1V8
U1
MCU & SubGHz Radio
EFR32xG23xxxxF512xM48
50 OHM MATCH & FILTER
AE1
Antenna
Optional PCB Antenna
UFL for tuning
J3
Conn_Coaxial
J1
Conn_Coaxial
ANTENNA TUNE VALUES DETERMINED AFTER TUNING
SW2
PTS810
J7
Conn_01x05
Optional Expansion Headers
J6
Conn_01x05
Silabs Minisimplicity Tag-Connect 10 pin Debug Header
J4
Conn_02x05_Odd_Even
J5
Conn_01x02
SW1
PTS810
Two Bits of Trace debug. SWO is TDO.
Y2
32768Hz
Optional RTC Crystal for Time CC End Devices
Y1
39MHz 10ppm
D1
QLSP14RGB_B
Optional RGB Status LED
Optional I2C Sensors
J2
Qwiic_RA
Z-Wave Alliance
Sheet: /
File: ZRADmini.kicad_sch
Title: ZRAD Mini Z-Wave Reference Application Design
Size: A
Date: 2024-11-13
Rev: A
KiCad E.D.A. 8.0.4
Id: 1/1