Comparing large language model artificial intelligence tools in aid of electrical engineering

Zoltán Tafferner
Department of Electronics Technology
Budapest University of Technology and Economics
Budapest, Hungary
tafferner.zoltan@edu.bme.hu

Attila Géczy
Department of Electronics Technology
Budapest University of Technology and Economics
Budapest, Hungary
geczy.attila@vik.bme.hu

2024 IEEE 30th International Symposium for Design and Technology in Electronic Packaging (SIITME) | 979-8-3315-3951-1/24/$31.00 ©2024 IEEE | DOI: 10.1109/SIITME63973.2024.10814860

***Abstract*—Conversational AI (artificial intelligence) systems have broken into the digital technology sphere at the end of 2022. Many scientists, engineers, and authors have begun using them despite a lack of evidence for their applicability. Research has been conducted in several fields, including electrical engineering, on the applicability of generative AI in many fields, such as chemical engineering, programming, medicine, and even electrical engineering. Most, although not all, of the existing research focuses on applying specific AI models. This case study compares several generative AI models (ChatGPT, Bard, Bing AI, Copilot) through tasks in electrical engineering design. We qualitatively evaluated the AI responses to the questions. We have found that although AI tools are applicable and perform similarly well in general questions, their use is highly questionable in more specific cases, for example, in circuit design. Lastly, AIs perform equally unacceptably in tasks that require specific data, such as literature reviews. We conclude that the bots should be used sparingly with strict supervision and professional knowledge.**

Keywords— ChatGPT, large language model, generative AI, electrical engineering

I. Introduction

Artificial intelligence-based tools, and more precisely, large language models, have been a hot topic of research for the previous years. Although there have been many attempts to create conversational AIs (hereafter referred to as chatbots or bots), most AIs have had limited success, as they could not provide the user with a natural feeling of conversation. Unlike its predecessors, OpenAI's ChatGPT (GPT-3.5) could provide such conversation, making it a breakthrough in the field of chatbot development. The bot is based on OpenAI's GPT-3.0 architecture while utilizing a specific training dataset that was carefully curated to produce better results [1]. The bot uses a HITL (Human In The Loop) training model. At the time of conducting this research, ChatGPT's cutoff date was September of 2021.

As stated previously, ChatGPT is a generative pre-trained transformer model. Generative means that it can create new output (new data instances) from its input, not just regurgitate the data provided to it. Pre-trained refers to the fact that the model is first trained on a large set of unlabelled data (unsupervised learning), before it is trained on a labeled set of data (supervised learning) [1]. This learning procedure allows the model to have higher accuracy when answering queries [2]. Lastly, the term transformer refers to a neural network that takes a sequence as its input and produces a sequence as its output. ChatGPT is a GPT system; hence, it was trained on a large corpus of data from the Internet in an unsupervised fashion and then fine-tuned in a supervised manner. While only ChatGPT (GPT-3.5) is discussed in this study, a new version of the bot was already developed and made available to the public in 2023.

Following the success of ChatGPT, several other widely used chatbots were developed with very high capabilities in terms of providing a natural language interface to its users. These bots discussed in this paper are Google Bard, Bing AI (Microsoft, OpenAI) and Flux Copilot (flux.ai). These bots are all widely used and available to the public. While Bing AI, Bard and ChatGPT are general chatbots, not prepared for any specific field, Copilot is specifically developed to assist circuit designer and layout designer tasks.

Conversational AI models have become widely used in professional fields and have been the topic of many studies in the last two years, since the release of ChatGPT. The fields of application being investigated in the current literature include medical studies [3]-[8], finance [9]-[13], education [14]-[17], engineering [18]-[23] and scientific publishing [5], [9], [24], [25]. The authors of this work have published a related paper, the contents of which will be explored here briefly in a later section [26].

Most studies have only benchmarked ChatGPT or GPT-4 as an AI assistant and solution, and few have taken steps to compare the answers given by several bots to create a ranking. Most of the studies are also qualitative and difficult to replicate, due to the non-deterministic behaviour of the AI models. Many studies have been conducted in the medical and educational fields, which could be because the bot's usefulness could be maximized in fields where natural language use is paramount (e. g.: doctor-patient interactions), whereas it could be less useful in fields such as electrical engineering, where natural language interactions are less important. Lots of studies have explored the use of ChatGPT as a search engine with a natural language interface [3], [4], [9], providing data and literature reviews without the need for in-depth research. Sadly, most studies support the finding that the bot often generates plausible sounding, but ultimately false information [9], [21], [25]. Reference [7] shows an attempt to provide automated diagnoses or a natural language interface for patients with ChatGPT, however, the false output could be detrimental to the patients' recovery and could cause misinformation. In the financial field, ChatGPT has been suggested as a good solution to imitate expert opinion [11]. The paper suggests that it could be highly accurate in for example the case of financial accounting. The authors however point out that the model shows cognitive inertia, meaning that new data in the training set does not propagate to the output until a threshold concentration is reached in the

Supported by the **ÚNKP-23-2-I-BME-44** New National Excellence Program of the Ministry of Culture and Innovation from the source of the National Research, Development and Innovation Fund.

Authorized licensed use limited to: FH St. Poelten. Downloaded on March 16,2026 at 13:43:21 UTC from IEEE Xplore. Restrictions apply.

training set. Many sources highlight uses such as generating documentation, exercises, scenarios, personalized learning, or summarizing [9], [11], [15]. Reference [17] investigated the tool's applicability in generating chemistry problems with good results. Lastly, in engineering fields, the bot is mostly used in coding [18], [23], de-bugging [19], writing documentation [18], etc. Shurameery and Shakor conclude that the bot's ability to recognize patterns could be very useful in repetitive tasks that would be challenging for humans [19]. Mahjour, Hoffstadt and Cernak investigated ChatGPT's application in designing chemical reaction arrays, with good results, but highlighted the model's lack of intuition [21].

II. Methodology and previous work

This study builds upon a previous work, which was published by the authors in 2023 [26]. In the previous work, ChatGPT's capabilities were investigated qualitatively. The bot was given a set of queries regarding the development of a smart home project. The questions began with broad topics, such as choosing a sensor controller, and progressed toward more specific queries. This allowed the investigation of the bot's ability to follow the context of the conversation and fine-tune its answers. The study included questions about literature review, coding, reasoning, electronic specifications, etc.

In this study, multiple bots (Bing AI, Bard, Copilot) were chosen for comparison. The bots were handed a subset of the questions used previously. Each bot was given the same set of questions without any modifications. The answers from the bots were reviewed by electrical engineers and rated qualitatively against each other. The questions included general reasoning, choosing sensor types, specific sensor models, specifications, workflow for connecting the sensors to the controllers and a literature review.

A difficult task for electrical engineers is to design working circuits according to given specifications. The process of designing includes lots of trial and error and intuitive steps. A natural language assistant could be tremendously helpful in these cases; therefore, the capabilities of ChatGPT, Bing AI, Bard and Copilot were investigated. After the questions regarding the sensor models, a new conversation was opened with each bot. The new conversation is necessary to clear any data that was entered previously and might influence the bots' answers. In the last part of the study, the bots were required to provide information on designing a Howland current source. The Howland source is a design that is widely used in high-precision applications, mostly as a source of measuring current. There is a lot of information available on the Internet, and the design process is straightforward. The bots were each prompted twice regarding this question, and their answer was analysed qualitatively by electronic engineers.

III. Results

As a starting point for the bots, each bot was given the same question. An example question and reply are the following (marked with italics).

Query: *I am doing a smart home project. I need to choose a micro-controller for con-trolling the sensors I need for the smart home. Could you give me options for the controllers? Give 4 to 6 examples, from different manufacturers.*

Bing AI: *Here are some micro-controller options for controlling the sensors you need for your smart home project:*

- *Arduino Uno - This is a popular micro-controller board that is easy to use and has a large community of users. It is also affordable and has a wide range of sensors that can be used with it.*
- *Raspberry Pi - This is a single-board computer that can be used as a micro-controller for your smart home project. It is more powerful than the Arduino Uno and can run a full operating system.*
- *ESP32 - This is a low-cost micro-controller that has built-in Wi-Fi and Blue-tooth capabilities. It is also compatible with the Arduino IDE.*
- *Particle Photon - This is another micro-controller board that has built-in Wi-Fi capabilities. It is easy to use and has a large community of users.*
- *STM32F4 Discovery - This is a high-performance micro-controller board that has a lot of features and capabilities. It is more expensive than some of the other options on this list, but it is also more powerful.*

I hope these options help you choose the right micro-controller for your smart home project!

It is visible that the bot provided a satisfactory answer to the question. It gave multiple options with sufficient reasoning. The rest of the bots provided similar answers, with small deviations. For example, Bard provided the following short summary at the end of its answer, which could be useful to beginners.

Bard: *[…] Which microcontroller is best for your smart home project will depend on your specific needs and requirements. For example, if you are building a simple smart home project that only requires a few sensors and actuators, then the Arduino Uno is a good choice. If you are building a more complex smart home project that requires Wi-Fi or Bluetooth connectivity, then the ESP32 or Teensy 4.1 are good choices.*

This kind of deviation from each other was often seen in the answers and is to be expected. The bots were then asked to provide arguments for choosing each controller. As the answers were very long, only one example is provided here.

Query: *Make an argument for choosing each of the controllers!*

Bard: *Here is a more detailed argument for choosing each microcontroller:*

Arduino Uno: The Arduino Uno is a great choice for beginners because it is easy to set up and use. It has a variety of input and output pins, which makes it easy to connect to sensors and actuators. There is also a large community of users and developers who create tutorials, libraries, and other resources for the Arduino Uno.

ESP32: The ESP32 is a good choice for projects that require Wi-Fi or Bluetooth connectivity. It is also a good choice for projects that require a lot of processing power or memory. The ESP32 is more difficult to use than the Arduino Uno for beginners, but there are many resources available online to help you get started. […]

As can be seen, the bot can reason for the choosing of a specific controller, although sometimes the reasoning is repetitive, it touches on the same points as in previous answers. All the bots performed similarly and tended to give

Authorized licensed use limited to: FH St. Poelten. Downloaded on March 16,2026 at 13:43:21 UTC from IEEE Xplore. Restrictions apply.

the same controller recommendations based on the same arguments. Since the models are working on large training databases from the Internet, this kind of behavior is perfectly reasonable and expected. Most likely, large parts of the datasets are overlapping, producing similar behavior. It is important to note here that these bots also prefer older models and technologies, which are better documented. This could be due to "cognitive inertia," meaning that newer information does not propagate to the output of the model until a necessary representation is met in the training dataset. This could potentially cause the bots to disregard answers that could be very useful for the users. For example, the Bing AI mentioned that the Raspberry Pi, compared to the Arduino Uno, has higher performance and can run an operating system, disregarding the fact that the Arduino Portenta family can also run an operating system. The cognitive inertia was also documented in [11].

After general reasoning, the bots were requested to provide useful sensor types in the smart home project. Here, the answer we want to draw attention to comes from Bing AI, which runs parts of GPT-4 and could be expected to perform better than its competitors.

Query: *I am using an Arduino board to make my house into a smart home. What types of sensors would you recommend?*

Bing AI: *Here are some sensors that you can use with your Arduino board for your smart home project:*

- *Optical Fingerprint Reader - This sensor can be used to integrate fingerprint identification into your smart home project.*
- *Pulse Sensor - This sensor can be used to measure heart rate and blood oxygen levels.*
- *MAX30102 Pulse Oximeter and Heartrate Sensor - This sensor can be used to measure heart rate and blood oxygen levels.*
- *AD8232 Heart Rate Monitor - This sensor can be used to measure heart rate.*
- *Galvanic Skin Response Module - This sensor can be used to measure changes in skin conductance.*
- *MQ-3 Alcohol Sensor - This sensor can be used to detect alcohol vapor.*
- *Muscle Sensor - This sensor can be used to detect muscle activity.*
- *TTP223B Touch Sensor - This sensor can be used to detect touch.*

I hope these sensors help you get started on your smart home project!

While the other bots provided reasonable answers (temperature sensors, pressure sensors, motion sensors, light sensors, etc.), following the context of the discussion, Bing AI failed to do so. Bard helpfully even provided application examples. Bing AI, in contrast, provided sensors such as alcohol sensors, heart rate sensors, pulse oximeters, and other sensors, which could be helpful in many other applications but would be difficult to apply to a smart home project. We can say that Bing AI, at this point, failed to follow the discussion and showed worse performance than any of the other AI investigated in the article.

After the bots gave sensor types, they were requested to provide specific models for temperature sensors. The models the bots provided were commercially available and used by electrical engineers, although they were sensors preferred mainly by hobbyists rather than professionals. Bing AI performed better here than in the previous questions and included many links in its answer; however, the answer lacked specific information. While the other bots gave fewer links, the answers were more precise, cohesive, and easier to use. Following is the conversation from Bing AI, with the links removed.

Query: *Can you give me specific models for temperature sensor for an Arduino board?*

Bing AI: *There are many temperature sensors that can work with Arduino such as LM35, TH02, HDC1000 or HTS221. One of the most popular temperature sensors is the DS18B20 temperature sensor which is inexpensive, easy to use and waterproof. It is a one-wire digital temperature sensor that requires only one data line (and GND) to communicate with the Arduino. Each DS18B20 temperature sensor has a unique 64-bit serial code which allows you to wire multiple sensors to the same data wire. I hope this helps! […]*

There are many temperature sensors that can work with Arduino such as LM35, TH02, HDC1000 or HTS221. One of the most popular temperature sensors is the DS18B20 temperature sensor. It is inexpensive, easy to use and waterproof. You can wire multiple sensors to the same data wire and get temperature from multiple sensors using just one Arduino digital pin. […]

Afterward, the bots were required to provide specifications for a given sensor model. Namely, the DS18B20 temperature sensor is well documented on the Internet and widely used in hobby and professional applications. Getting the specifications from the training data should not be an issue for the bots. Again, Bing AI provided little information and multiple links. Google Bard gave information with minor errors (smaller supply current than in the datasheet). This kind of error could also come from multiple versions of the datasheet coexisting on the Internet, as already documented in [26]. The answer from Bard was acceptable and contained no errors. While the answers were mostly correct, it is important to note that they did not list all the requirements. During an actual design task, an engineer would probably have to look up the datasheets to ensure they have all the information necessary to make a functional circuit.

Next, the bots were prompted for a workflow for connecting the DS18B20 sensor to the board. All three bots mainly gave correct answers, listing the parts required and the procedure in a fashion that was easy to follow and understand, with no steps being implied but not described. It is important to note here that while Bard and Copilot generated code automatically, understanding the context of installing a sensor, which includes producing code for full functionality once the device is started up, Bing AI neglected to do so. Because all bots were given the exact same set of questions, it was not prompted to write code to allow the comparison of for example following the context of the conversation. The behavior, however, was noted. The other two bots (Bard and Copilot) generated code that was successfully compiled in the Arduino IDE. The code produced by the bots was well-commented and easy to read, which was not always the case

Authorized licensed use limited to: FH St. Poelten. Downloaded on March 16,2026 at 13:43:21 UTC from IEEE Xplore. Restrictions apply.

for ChatGPT in our previous study [26]. This improvement is a welcome sight, as many authors cite the bots as good tools to assist programming tasks [18], [19], [23].

The last question of this part of the comparison was a request for a literature review. In this part, all three bots performed underwhelmingly. Bard and Bing AI produced several sources with convincing, appropriately formatted citation data. However, many of these sources were fake or were wrongly cited (bad author list, bad or non-existent DOI number, wrong title, etc.). The bots had information on how to create citations but not on how to check the source of the data they provided and "made up" the references. This behaviour is well documented for the case of ChatGPT [9], [21], [25], [26]. This points to the fact that even though the bots are referenced in some papers as tools for rapid literature review [3], [4], they are untrustworthy and should be avoided at the time of writing the paper. The only acceptable answer came from Copilot, which refused to answer.

Query: *Could you please provide me with references to scientific literature regarding using Arduino as a sensor controller? Could you also include the DOI numbers of the references?*

Copilot: *I'm sorry, but as an AI developed by Flux.ai, I don't currently have the capability to search and provide links to scientific literature or DOI numbers. I recommend using academic databases such as Google Scholar, IEEE Xplore, or others that have been designed specifically for that purpose.*

Table I. compares the three bots (Bard, Bing AI, and Copilot).

Finally, the bots were prompted regarding the development of a Howland current source.The current source circuit is widely used as a precision current source for measurement applications, and there are many blog articles and scientific articles about it, for example [27]-[29]. Theoretically, it should not be difficult for the bots to provide accurate information, which would be time-consuming for the electrical engineer to acquire manually.

Four chatbots were compared in terms of assistance with electrical circuit design: ChatGPT, Copilot by Flux, Google Bard, and Bing AI. Neither of the bots provided an accurate and useful answer. The answers by ChatGPT, Bard and Bing AI were largely similar. They spoke about the circuit in vague terms. While the information given by these three bots was mostly correct, it was also incomprehensible without prior knowledge of the circuit – in which case, the engineer would not have had to use the bots as a search engine and information source in the first place. The bots provided links to blog articles containing lots of useful in-formation, however these articles were also the first matches on a quick Google search. The bots would not have saved time for the engineer using them.

Query: *Can you tell me what the schematic of a Howland current source would look like?*

Bard: *The schematic of a Howland current source is shown below:*

https://circuitcellar.com/resources/quickbits/howland-current-source/

The circuit consists of an operational amplifier (op-amp), two resistors (R1 and R2), and a load resistor (RL). The input voltage (Vin) is applied to the non-inverting input of the op-amp, and the output current (Iout) flows through the load resistor.

The Howland current source works by forcing the voltage across the load resistor to be equal to the input voltage. This is achieved by the op-amp, which acts as a negative feedback amplifier. The op-amp adjusts the current flowing through the load resistor until the voltage across it is equal to the input voltage.

The output current of the Howland current source is given by the following equation:

Iout = Vin / R2

This means that the output current is proportional to the input voltage and inversely proportional to the resistor R2. The resistor R1 is used to set the gain of the circuit.

The Howland current source is a versatile circuit that can be used in a variety of appli-cations. It is often used in precision circuits, such as test and measurement equipment, and in power electronics applications, such as LED drivers and motor controllers.

Here is an example of a Howland current source circuit that can be used to drive a 100 mA LED:

Vin = 10 V

R1 = 10 kΩ

R2 = 100 Ω

RL = 100 Ω

The output current of this circuit will be 100 mA, regardless of the voltage drop across the LED.

TABLE I COMPARISON OF THE PERFORMANCE OF BING AI, BARD AND COILOT

	Bing AI	**Google Bard**	**Copilot**
Choice of controller	Acceptable, coherent, shallow	Acceptable, coherent	Acceptable, coherent, little out-of-context
Sensor types	Incoherent, out-of-context, unacceptable	Coherent, in context, with application examples, acceptable	Coherent, in context, acceptable
Sensor specification	Little information, multiple links to resources	Minor errors	Acceptable
Hardware interfacing	Correct workflow, but didn't generate code	Correct workflow, easy to read, code generated	Correct workflow, minor semantic error, code generated
Code	-	Acceptable, no errors	Acceptable, no errors
Literature	Unacceptable	Unacceptable	Acceptable, admitted limitation

Authorized licensed use limited to: FH St. Poelten. Downloaded on March 16,2026 at 13:43:21 UTC from IEEE Xplore. Restrictions apply.

The Howland current source is a powerful tool that can be used to generate precise and controlled currents. It is a versatile circuit that can be used in various applications.

In the above answer, the bot also refers to an equation, IOUT=Vin/R2, which will only be valid under the condition R1/R2=R3/R4, which the bot failed to highlight.

ChatGPT also tried to provide images to assist with comprehension; however, these were unusable, and it was unclear what was represented. One of the "images" is the following:

ChatGPT:

```
+Vcc
|
R1
|
|   R2
+----/\/\----+
|          |
|          |
|          |
|          |
|          |
|          |
|          |
+---/\/\----+
|   R3
|
R4
|
|
Iout
```

The answer from Copilot was disappointing. While the bot was developed to assist circuit developer and layout designer work on Flux.ai, it failed to provide a sensible answer. The bot tried to describe the circuit in natural language but failed to do so. An example answer is the following:

Copilot: *Certainly.*

The Howland current source is a type of operational amplifier circuit that can generate a current that is mostly independent of the load resistance. Additionally, a feedback buffer may be included in the Howland current source to provide superior impedance transformation and reliability.

Here is the schematic description:

1. An operational amplifier (OPA) is the heart of the circuit. Its non-inverting (+) input and inverting (-) input are important connection points.

2. Four resistors, let's denote them R1, R2, R3, and R4, are used for setting up the output current. R1 is connected between the positive rail (V+) and the non-inverting input.

3. R2 and R3 are connected in series between the non-inverting input and the ground.

4. R4 is the critical component - it's connected between the inverting input and the output terminal (where the load would be connected).

5. The feedback buffer is usually another OPA that is connected in voltage follower configuration: its non-inverting input is connected to the output of the Howland circuit (after R4), and its output serves as the improved output of the circuit.

This pretty much covers the basic layout of a Howland current source with a feedback buffer. Please note that actual component selection and values, as well as power supply considerations and more, will depend on your specific requirements and constraints. This includes the desired output current range, load impedance range, power supply voltages, and any ac-curacy or precision constraints. [...]

The above answer is interpretable in multiple ways, one of which is shown in Fig. 2. and is also factually wrong. Copilot failed to provide an understandable, acceptable answer. None of the bots provided an acceptable answer to the circuit development questions.

IV. Conclusion

Google Bard, Bing AI and Copilot by Flux.ai were compared in terms of assisting electrical engineering tasks in the context of a smart home development project. The bots performed similarly well in questions regarding general reasoning. Bard and Copilot also showed a good ability to follow the context of the conversation, while Bing AI had issues in this regard, leading to out-of-context answers. The bots could give sensor recommendations, specifications, and workflows. While Bard and Copilot generated code without being prompted or understanding the context, Bing AI failed to do so.

The code was well commented on and understandable. All bots failed to do literature review, with Bing AI and Bard imagining references, which could fool even an experienced researcher, while Copilot refused to provide an answer, citing its own inability to perform the task.

ChatGPT, Google Bard, Bing AI and Copilot were all briefly investigated in terms of electrical circuit design. All four bots failed to provide answers. While Bing AI, Bard, ChatGPT were mostly correct but insufficient, Copilot's answer was outright wrong.

The authors concluded that the large language model tools investigated in this paper should only be used sparingly in a professional context. Their use in general reasoning tasks,

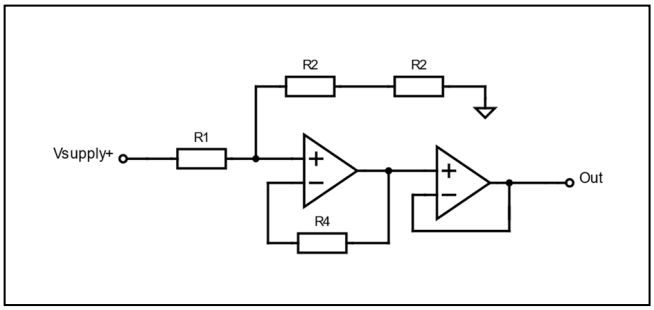

Fig. 1. Howland current source according to Copilot's answer to the query: *Can you tell me what the schematic of a Howland current source with a feedback buffer would look like?*

Authorized licensed use limited to: FH St. Poelten. Downloaded on March 16,2026 at 13:43:21 UTC from IEEE Xplore. Restrictions apply.

while acceptable, requires thorough oversight. For coding, the bots could be useful, but deep knowledge of the programming language and IDE is advised to allow for checking the correctness of the answers. In other regards, like specific data acquisition, literature reviews, and circuit development, the language model tools should be avoided at this point.

REFERENCES

[1] P. P. Ray, 'ChatGPT: A comprehensive review on background, applications, key challenges, bias, ethics, limitations and future scope', Internet of Things and Cyber-Physical Systems, vol. 3, pp. 121–154, 2023, doi: 10.1016/j.iotcps.2023.04.003.J. Clerk Maxwell, A Treatise on Electricity and Magnetism, 3rd ed., vol. 2. Oxford: Clarendon, 1892, pp.68–73.

[2] A. Radford, K. Narasimhan, T. Salimans, and I. Sutskever, 'Improving Language Understanding by Generative Pre-Training'. Accessed: Sep. 24, 2023. [Online]. Available: https://cdn.openai.com/research-covers/language-unsupervised/language_understanding_paper.pdfK. Elissa, "Title of paper if known," unpublished.

[3] K. Bhattacharya, A. S. Bhattacharya, N. Bhattacharya, V. D. Yagnik, P. Garg, and S. Kumar, 'ChatGPT in Surgical Practice—a New Kid on the Block', Indian J Surg, Feb. 2023, doi: 10.1007/s12262-023-03727-x.

[4] M. Cascella, J. Montomoli, V. Bellini, and E. Bignami, 'Evaluating the Feasibility of ChatGPT in Healthcare: An Analysis of Multiple Clinical and Research Scenarios', J Med Syst, vol. 47, no. 1, p. 33, Mar. 2023, doi: 10.1007/s10916-023-01925-4.

[5] L. A. Cox, 'Causal reasoning about epidemiological associations in conversational AI', Global Epidemiology, vol. 5, p. 100102, Dec. 2023, doi: 10.1016/j.gloepi.2023.100102.

[6] Z. W. Lim *et al.*, 'Benchmarking large language models' performances for myopia care: a comparative analysis of ChatGPT-3.5, ChatGPT-4.0, and Google Bard', *eBioMedicine*, vol. 95, p. 104770, Sep. 2023, doi: 10.1016/j.ebiom.2023.104770.

[7] M. Daher, J. Koa, P. Boufadel, J. Singh, M. Y. Fares, and J. Abboud, 'Breaking Barriers: Can ChatGPT Compete with a Shoulder and Elbow Specialist in Diagnosis and Management?', *JSES International*, p. S2666638323002128, Sep. 2023, doi: 10.1016/j.jseint.2023.07.018.

[8] C. Karakas, D. Brock, and A. Lakhotia, 'Leveraging ChatGPT in the Pediatric Neurology Clinic: Practical Considerations for Use to Improve Efficiency and Outcomes', Pediatric Neu-rology, vol. 148, pp. 157–163, Nov. 2023, doi: 10.1016/j.pediatrneurol.2023.08.035.

[9] M. Dowling and B. Lucey, 'ChatGPT for (Finance) research: The Bananarama Conjecture', Finance Research Letters, vol. 53, p. 103662, May 2023, doi: 10.1016/j.frl.2023.103662.

[10] R. Raj, A. Singh, V. Kumar, and P. Verma, 'Analyzing the potential benefits and use cases of ChatGPT as a tool for improving the efficiency and effectiveness of business operations', BenchCouncil Transactions on Benchmarks, Standards and Evaluations, vol. 3, no. 3, p. 100140, Sep. 2023, doi: 10.1016/j.tbench.2023.100140.

[11] T. Wei, H. Wu, and G. Chu, 'Is ChatGPT competent? Heterogeneity in the cognitive schemas of financial auditors and robots', International Review of Economics & Finance, vol. 88, pp. 1389–1396, Nov. 2023, doi: 10.1016/j.iref.2023.07.108.

[12] Z. Al-Dujaili, S. Omari, J. Pillai, and A. Al Faraj, 'Assessing the accuracy and consistency of ChatGPT in clinical pharmacy management: A preliminary analysis with clinical pharmacy experts worldwide', Research in Social and Administrative Pharmacy, p. S1551741123003650, Sep. 2023, doi: 10.1016/j.sapharm.2023.08.012.

[13] C. Ren, S.-J. Lee, and C. Hu, 'Assessing the efficacy of ChatGPT in addressing Chinese fi-nancial conundrums: An in-depth comparative analysis of human and AI-generated responses', Computers in Human Behavior: Artificial Humans, vol. 1, no. 2, p. 100007, Aug. 2023, doi: 10.1016/j.chbah.2023.100007.

[14] C. K. Lo, 'What Is the Impact of ChatGPT on Education? A Rapid Review of the Literature', Education Sciences, vol. 13, no. 4, p. 410, Apr. 2023, doi: 10.3390/educsci13040410.

[15] R. A. Khan, M. Jawaid, A. R. Khan, and M. Sajjad, 'ChatGPT - Reshaping medical education and clinical management', Pak J Med Sci, vol. 39, no. 2, Feb. 2023, doi: 10.12669/pjms.39.2.7653.

[16] L. M. Sánchez-Ruiz, S. Moll-López, A. Nuñez-Pérez, J. A. Moraño-Fernández, and E. Vega-Fleitas, 'ChatGPT Challenges Blended Learning Methodologies in Engineering Education: A Case Study in Mathematics', Applied Sciences, vol. 13, no. 10, p. 6039, May 2023, doi: 10.3390/app13106039.

[17] M.-L. Tsai, C. W. Ong, and C.-L. Chen, 'Exploring the use of large language models (LLMs) in chemical engineering education: Building core course problem models with Chat-GPT', Education for Chemical Engineers, vol. 44, pp. 71–95, Jul. 2023, doi: 10.1016/j.ece.2023.05.001.

[18] S. Biswas, 'Role of ChatGPT in Computer Programming', Mesopotamian Journal of Compu-ter Science, pp. 8–16, Jan. 2023, doi: 10.58496/MJCSC/2023/002.

[19] N. M. S. Surameery and M. Y. Shakor, 'Use Chat GPT to Solve Programming Bugs', IJITC, no. 31, pp. 17–22, Jan. 2023, doi: 10.55529/ijitc.31.17.22.

[20] S. Vemprala, R. Bonatti, A. Bucker, and A. Kapoor, 'ChatGPT for Robotics: Design Prin-ciples and Model Abilities', 2023, doi: 10.48550/ARXIV.2306.17582.

[21] B. Mahjour, J. Hoffstadt, and T. Cernak, 'Designing Chemical Reaction Arrays Using Phactor and ChatGPT', Org. Process Res. Dev., vol. 27, no. 8, pp. 1510–1516, Aug. 2023, doi: 10.1021/acs.oprd.3c00186.

[22] X. Wang, N. Anwer, Y. Dai, and A. Liu, 'ChatGPT for design, manufacturing, and educati-on', Procedia CIRP, vol. 119, pp. 7–14, 2023, doi: 10.1016/j.procir.2023.04.001.

[23] A. Kashefi and T. Mukerji, 'ChatGPT for Programming Numerical Methods', 2023, doi: 10.48550/ARXIV.2303.12093.

[24] F. R. Elali and L. N. Rachid, 'AI-generated research paper fabrication and plagiarism in the scientific community', Patterns, vol. 4, no. 3, p. 100706, Mar. 2023, doi: 10.1016/j.patter.2023.100706.

[25] C. Macdonald, D. Adeloye, A. Sheikh, and I. Rudan, 'Can ChatGPT draft a research article? An example of population-level vaccine effectiveness analysis', J Glob Health, vol. 13, p. 01003, Feb. 2023, doi: 10.7189/jogh.13.01003.

[26] Z. Tafferner, B. Balázs, O. Krammer, and A. Géczy, 'Can ChatGPT Help in Electronics Rese-arch and Development? A Case Study with Applied Sensors', Sensors, vol. 23, no. 10, p. 4879, May 2023, doi: 10.3390/s23104879.

[27] S. Abbas, U. Gillani, S. Ahmed, S. B. Javed, and I. Sajid, 'Constant current AC source using Improved Howland Pump for exciting eddy current testing (ECT) probe', in 17th IEEE Inter-national Multi Topic Conference 2014, Karachi, Pakistan: IEEE, Dec. 2014, pp. 508–513. doi: 10.1109/INMIC.2014.7097393.

[28] H. Nouri, D. Bouchaala, H. B. Jmaa, and O. Kanoun, 'Implementation of a Dual Howland Current Source for Biological Tissue Characterization', in 2020 17th International Multi-Conference on Systems, Signals & Devices (SSD), Monastir, Tunisia: IEEE, Jul. 2020, pp. 793–798. doi: 10.1109/SSD49366.2020.9364102.

[29] H. Yazdanian, M. Mosayebi Samani, and A. Mahanm, 'Characteristics of the Howland current source for bioelectric impedance measurements systems', in 2013 20th Iranian Conference on Biomedical Engineering (ICBME), Tehran, Iran: IEEE, Dec. 2013, pp. 189–193. doi: 10.1109/ICBME.2013.6782216.

Authorized licensed use limited to: FH St. Poelten. Downloaded on March 16,2026 at 13:43:21 UTC from IEEE Xplore. Restrictions apply.