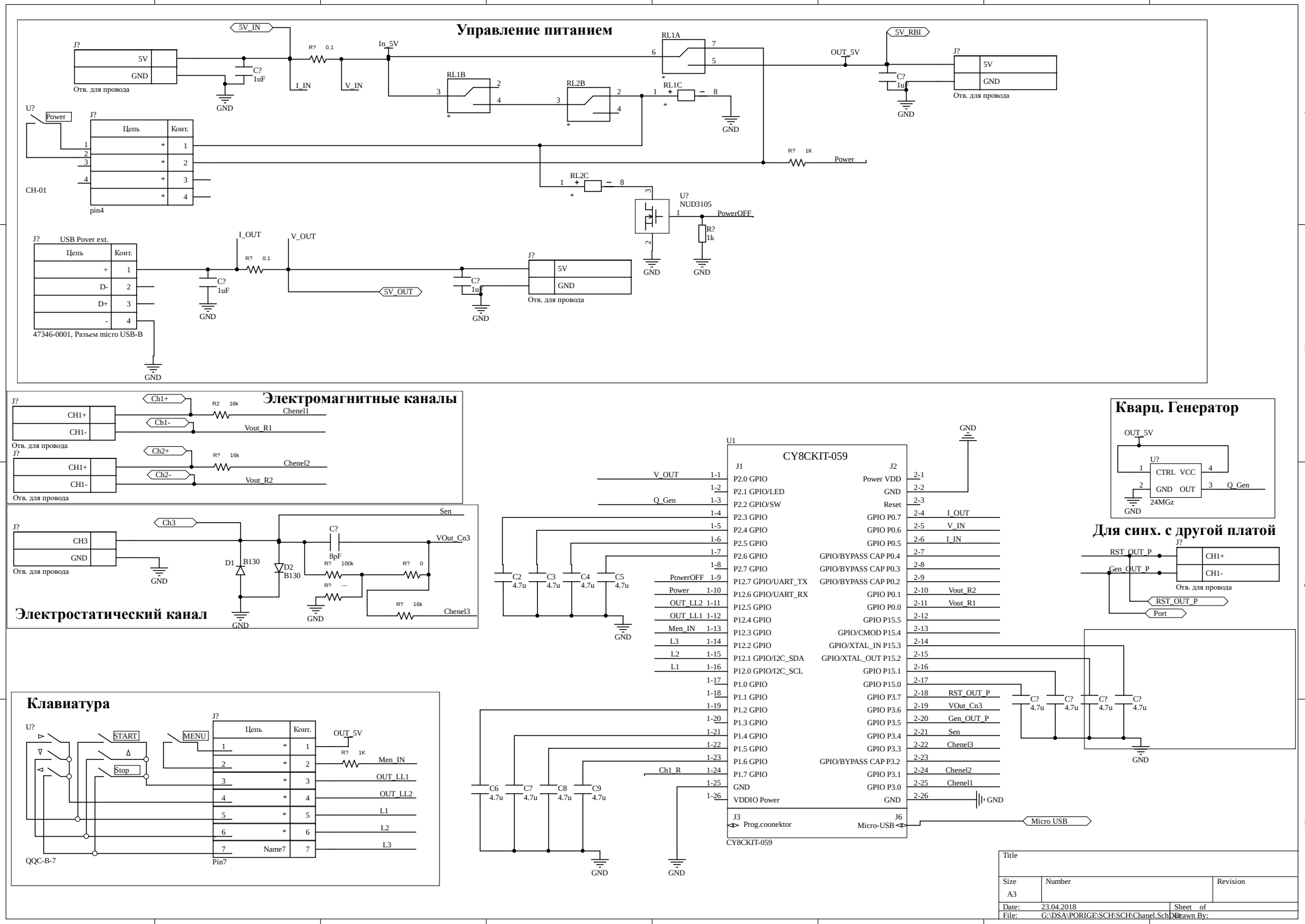
Управление питанием
5V_IN
J?
5V
GND
Отв. для провода
C? 1uF
R? 0.1
I_IN
V_IN
In_5V
RL1A
RL1B
RL2B
RL1C
RL2C
OUT_5V
5V_RBI
U? Power
CH-01
pin4
Цепь
Конт.
R? 1K
Power
U? NUD3105
PowerOFF
R? 1k
USB Pover ext.
47346-0001, Разъем micro USB-B
I_OUT
V_OUT
5V_OUT
Электромагнитные каналы
CH1+
CH1-
Ch1+
Ch1-
R2 16k
Chenel1
Vout_R1
Ch2+
Ch2-
R? 16k
Chenel2
Vout_R2
Электростатический канал
CH3
Ch3
Sen
VOut_Cn3
C? 8pF
D1 B130
D2 B130
R? 100k
R? 0
R? ---
R? 16k
Chenel3
Клавиатура
START
MENU
Stop
QQC-B-7
Name7
Pin7
Men_IN
OUT_LL1
OUT_LL2
L1
L2
L3
U1
CY8CKIT-059
J1
J2
P2.0 GPIO
P2.1 GPIO/LED
P2.2 GPIO/SW
P2.3 GPIO
P2.4 GPIO
P2.5 GPIO
P2.6 GPIO
P2.7 GPIO
P12.7 GPIO/UART_TX
P12.6 GPIO/UART_RX
P12.5 GPIO
P12.4 GPIO
P12.3 GPIO
P12.2 GPIO
P12.1 GPIO/I2C_SDA
P12.0 GPIO/I2C_SCL
P1.0 GPIO
P1.1 GPIO
P1.2 GPIO
P1.3 GPIO
P1.4 GPIO
P1.5 GPIO
P1.6 GPIO
P1.7 GPIO
GND
VDDIO Power
Power VDD
Reset
GPIO P0.7
GPIO P0.6
GPIO P0.5
GPIO/BYPASS CAP P0.4
GPIO/BYPASS CAP P0.3
GPIO/BYPASS CAP P0.2
GPIO P0.1
GPIO P0.0
GPIO P15.5
GPIO/CMOD P15.4
GPIO/XTAL_IN P15.3
GPIO/XTAL_OUT P15.2
GPIO P15.1
GPIO P15.0
GPIO P3.7
GPIO P3.6
GPIO P3.5
GPIO P3.4
GPIO P3.3
GPIO/BYPASS CAP P3.2
GPIO P3.1
GPIO P3.0
J3 Prog.coonektor
J6 Micro-USB
Micro USB
Ch1_R
Кварц. Генератор
CTRL VCC
GND OUT
Q_Gen
24MGz
Для синх. с другой платой
RST_OUT_P
Gen_OUT_P
Port
Title
Size A3
Number
Revision
Date: 23.04.2018
Sheet of
File: G:\DSA\PORIGE\SCH\SCH\Chanel.SchDoc
Drawn By: