1999

SERVICE MANUAL SUPPLEMENT

ELECTRIC POWERED INTERURBAN COMMUTER

EPIC

DaimlerChrysler Corporation

TABLE OF CONTENTS

SECTION 1	INTRODUCTION
SECTION 2	SUSPENSION
SECTION 5	BRAKES
SECTION 7	COOLING
SECTION 7A	MOTOR COOLING
SECTION 7B	BATTERY COOLING
SECTION 8	ELECTRICAL
SECTION 8A	BATTERY ENERGY MANAGEMENT SYSTEM
SECTION 8B	TRACTION BATTERY PACK
SECTION 8E	INSTRUMENT PANEL SYSTEMS
SECTION 8W	WIRING DIAGRAMS
SECTION 9	TRACTION MOTOR
SECTION 9A	POWERTRAIN CONTROLLER ASSEMBLY
SECTION 9B	TRACTION MOTOR
SECTION 19	POWER STEERING
SECTION 21	SPEED REDUCER
SECTION 24	HEATING AND AIR CONDITIONING

INTRODUCTION

TABLE OF CONTENTS

PAGE

NEW VEHICLE PREP 2

MAINTENANCE 3
AIR CONDITIONING REFRIGERANT 3
BATTERY COOLING SYSTEM 3
MAINTENANCE SCHEDULE 3
MOTOR OIL 3
PARTS AND LUBRICANT RECOMMENDATIONS 3
POWER STEERING FLUID 3
TRANSAXLE FLUID 3
RETURN OF BATTERIES 4

TOWING 5
WARNINGS AND CAUTIONS 5
RECOMMENDED TOWING EQUIPMENT 5

SAFETY 6

PAGE

NOTES, CAUTIONS AND WARNINGS 6
GENERAL SAFETY PRECAUTIONS 6
GENERAL ELECTRICAL WARNINGS 6
SPECIFIC SAFETY WARNINGS AND CAUTIONS 7
SAFETY PRECAUTIONS FOR WELDING ON THE EPIC 8
SERVICING SUB–ASSEMBLIES 8
VEHICLE MAINTENANCE PRECAUTIONS 9
ROAD TESTING A COMPLAINT VEHICLE 9
HOISTING RECOMMENDATIONS 9
SPECIFICATIONS 10

FEATURES 10
EPIC ACRONYMS 11

NEW VEHICLE PREP

MAINTENANCE

AIR CONDITIONING REFRIGERANT

The air conditioning system uses R–134a refrigerant. A special hindered polyester oil (ESTER) must be used with this system. Do not use standard PAG oil associated with other R–134a systems.

BATTERY COOLING SYSTEM

The traction battery pack and several underhood electronics are cooled by a coolant system which circulates the battery coolant through the components. The coolant is driven by an electrical pump and uses a coolant reservoir bottle to check and maintain proper fill level. Refer to section 7 in this supplement for checking and filling of coolant.

MAINTENANCE SCHEDULE

The maintenance schedule has been developed to give you maximum economy, dependability and performance from the vehicle. It is the owner's responsibility to make sure the vehicle is properly serviced according to the following recommendations.

The operator should make sure that the vehicle is fully charged before beginning daily operations.

The operator should check the vehicle for leaks, looking at the parking area after the vehicle has moved. If any fluids other than water condensation from the air conditioning system are found, the vehicle should be inspected immediately.

Toward the front of the vehicle, look for:

- Traction Motor fluid (red oil)
- Power steering fluid (clear to yellow oil)
- Transaxle fluid (brown oil)
- Windshield washer solvent (blue liquid)
- Air conditioning condensate (water)
- Battery pack coolant (green liquid)

Maintenance must be performed by authorized service personnel only. For non–electric vehicle components, follow the maintenance schedule and instructions found in the standard production minivan Owner's Manual.

The tires should be rotated every 8,000km (5,000 miles).

The following maintenance must be performed every 12,070 km (7,500 miles) or every 6 months:

TRANSAXLE FLUID

The transaxle is filled with 5W–30 engine oil. If it is necessary to add fluid to this unit, use only the oil specified by DaimlerChrysler.

The transaxle should be inspected for leaks and proper oil level when other under–vehicle service is performed. To inspect the transaxle oil level, position the vehicle on a level surface. Remove the fill plug from the transaxle side cover. The oil level should not be below 4 mm (3/16 in.) from the bottom of the oil fill opening.

The transaxle does not require periodic maintenance. The oil should be changed only when water contamination is suspected. If the oil has a foamy or milky appearance, it is probably contaminated.

- Check transaxle fluid level. Refer to Transaxle Fluid in this section.
- Check power steering fluid level. Refer to section 19 in this manual.
- Check battery pack coolant level. Refer to section 7 in this manual.
- General inspection of vehicle for loose wires, hoses, connectors and general vehicle integrity.
- Check tires for wear bar and pressure.

MOTOR OIL

The traction motor only uses oil that meets MIL–H–87257 hydraulic oil standards (Castrol® BR MIC 881, or equivalent). The traction motor should be inspected for leaks when other under vehicle service is performed.

PARTS AND LUBRICANT RECOMMENDATIONS

When service is required, DaimlerChrysler recommends that only Mopar® Brand parts, lubricants and chemicals be used. Mopar® provides the best engineered products for servicing DaimlerChrysler vehicles.

POWER STEERING FLUID

The power steering system uses standard Mopar® power steering fluid. Do not use automatic transmission fluid. The power steering system should be inspected for leaks when other under vehicle service is performed.

RETURN OF BATTERIES

In the event that it is determined that the traction batteries are no longer usable, one of the following alternative steps must be taken:

- If the traction batteries are under warranty, they must be returned to DaimlerChrysler for analysis and disposed of through the approved battery disposal system.
- If the traction batteries are no longer under warranty, they must be disposed of through an appropriate battery disposal system or through the dealership.

TOWING

WARNINGS AND CAUTIONS

WARNING: DO NOT LIFT OR TOW VEHICLE BY FRONT OR REAR BUMPER, OR BUMPER ENERGY ABSORBER UNITS.

WARNING: DO NOT ALLOW PASSENGERS TO RIDE IN A TOWED VEHICLE.

WARNING: DO NOT GO UNDER A LIFTED VEHICLE IF NOT SUPPORTED PROPERLY ON SAFETY STANDS.

WARNING: DO NOT DAMAGE ANY HIGH VOLTAGE LINES WHEN ATTACHING TOWING DEVICE TO VEHICLE.

WARNING: IN THE EVENT OF A BREAKDOWN, DO NOT TURN THE IGNITION TO THE ON POSITION. IF THE VEHICLE BEING TOWED REQUIRES STEERING, THE IGNITION SWITCH MUST BE IN THE OFF POSITION. THIS WILL LEAVE THE STEERING COLUMN IN THE UNLOCKED POSITION, BUT WILL NOT PROVIDE POWER ASSISTED STEERING.

CAUTION: Do not damage brake lines, shock absorbers, sway bars or any other under vehicle components when attaching towing device to vehicle.

CAUTION: Do not attach towing device to front or rear suspension components.

CAUTION: Do not secure vehicle to towing device by the use of front or rear suspension or steering components.

CAUTION: Remove or secure loose or protruding objects from a damaged vehicle before towing.

CAUTION: Refer to state and local rules and regulations before towing a vehicle.

RECOMMENDED TOWING EQUIPMENT

A tilting flat–bed type truck must be used to tow the vehicle any significant distance. Lifting the front end of the vehicle with conventional tow truck equipment will damage it. Towing equipment that lifts the vehicle by the front wheels is an acceptable substitute.

The vehicle may be towed if the gearshift lever is in the neutral position. If the transaxle is not operative, the vehicle must be towed with the front wheels off the ground.

To pull the vehicle (from the front) use a snatch strap, loop it around the front motor mount and down under the front bumper. DO NOT ATTEMPT TO LIFT THE FRONT END OF THE VEHICLE IN THIS MANNER!

SAFETY

NOTES, CAUTIONS AND WARNINGS

This Service Manual Supplement uses **NOTES, CAUTIONS** and **WARNINGS** to draw the technician's attention to useful and important information.

A **NOTE** provides added information to help complete a procedure or better understand the material covered.

A **CAUTION** is used to call attention to errors which can cause damage to the vehicle.

A **WARNING** is used for emphasis when an error or unsafe practice can cause personal injury and/or damage to the vehicle.

GENERAL SAFETY PRECAUTIONS

Because the EPIC is a new form of transportation to the industry, it presents a new set of **WARNINGS** and **CAUTIONS**. Many of them are new even to experienced automotive personnel.

Some areas of the EPIC are potentially dangerous even after the battery pack has been disconnected. It is important to exercise caution around the EPIC even if it does not have the battery pack installed or connected.

The work area around the EPIC must be marked off with safety cones to keep unnecessary personnel out of the work area and to protect the technicians working on the vehicle. Unnecessary personnel around the vehicle during service pose a threat to the safety of all involved.

WARNING: DO NOT ALLOW UNNECESSARY PERSONNEL IN THE WORK AREA. UNNECESSARY PERSONNEL PUTS EVERYONE INVOLVED AT GREATER RISK OF INJURY OR ELECTROCUTION OR COMPONENT DAMAGE.

WARNING: THE EPIC IS POWERED BY BOTH AC AND DC VOLTAGES THAT CAN INFLICT SEVERE PERSONAL INJURY OR DEATH.

All personnel who interact with the EPIC must understand the responsibilities that accompany their jobs. Personnel should perform only those tasks they have been trained to do.

The EPIC is a safe and reliable vehicle, provided all of the safety precautions are observed. This Service Manual is designed to emphasize these cautions in order to prevent accidents.

GENERAL ELECTRICAL WARNINGS

Always follow specific precautions when working around the EPIC. Be sure to understand these precautions before servicing any component on the vehicle.

WARNING: NEVER TOUCH A PERSON WHO HAS BEEN ELECTROCUTED. FIRST, DEACTIVATE THE ELECTRICITY AT THE SOURCE. IF THAT IS NOT POSSIBLE, MOVE THE PERSON AWAY FROM THE ELECTRICAL SOURCE WITH A NONCONDUCTIVE OBJECT (EG., RUBBER GLOVES, DRY WOOD, ETC.)

WARNING: ALWAYS WEAR THE SPECIFIED PROTECTIVE CLOTHING AND USE INSULATED VOLTAGE RATED SPECIAL SERVICE TOOLS AND EQUIPMENT WHEN WORKING WITH THE EPIC. FAILURE TO DO SO CAN CAUSE INJURY OR DEATH.

WARNING: ALWAYS WORK WITH ANOTHER INDIVIDUAL WHEN WORKING AROUND HIGH–VOLTAGE. WORKING ALONE CAN PREVENT EMERGENCY PERSONNEL FROM BEING CONTACTED IN THE EVENT OF AN EMERGENCY.

WARNING: WHEN SERVICING THE EPIC ELECTRIC VEHICLE, IT IS CRITICAL THAT PERSONNEL WEAR EYE PROTECTION AND REMOVE ALL METAL JEWELRY SUCH AS WATCHBANDS, RINGS AND BRACELETS THAT MIGHT MAKE AN INADVERTENT ELECTRICAL CONTACT.

WARNING: WHENEVER POSSIBLE WORK WITH ONLY ONE HAND IN CONTACT WITH THE VEHICLE. THIS WILL MINIMIZE THE EFFECT OF HIGH VOLTAGE SHOCK TO THE BODY. FAILURE TO OBSERVE THIS RULE CAN LEAD TO SEVERE BODILY INJURY OR DEATH

GENERAL ELECTRICAL WARNINGS (Continued)

WARNING: TAKE THE TIME TO BE SAFE, DON'T RUSH THROUGH A JOB. FAILURE TO TAKE THE PROPER SAFETY PRECAUTIONS MAY LEAD TO BODILY INJURY OR DEATH.

WARNING: MOST ELECTRICAL ACCIDENTS ARE THE RESULT OF INCORRECT OR CARELESS ACTIONS, NOT FAULTY EQUIPMENT. FAILURE TO FOLLOW THE CORRECT PROCEDURES EXACTLY MAY RESULT IN BODILY INJURY OR DEATH.

CAUTION: If you are not trained for an EPIC task, DO NOT attempt the job. Get the EPIC trained service technician to perform the required powertrain related maintenance.

SPECIFIC SAFETY WARNINGS AND CAUTIONS

Handled improperly, the batteries and high voltage present in this vehicle can be dangerous. Follow these precautions during service, charging and recharging operations to avoid personal injury or damage to the vehicle.

Before attempting to attach diagnostic equipment or perform service repair procedures, always disconnect the traction battery tub by switching the service disconnect switch and removing the C1 high voltage connector from the Powertrain Controller Assembly (PCA).

While driving the vehicle, battery pack voltage can range from 240 VDC to 410 VDC. During charging, battery pack voltage can range from 325 VDC to 430 VDC.

WARNING: THIS VEHICLE CONTAINS 28 12–VOLT (NOMINAL) BATTERIES CONNECTED IN SERIES. ALWAYS DISCONNECT THE SERVICE DISCONNECT SWITCH BEFORE ATTEMPTING ANY SERVICE PROCEDURES. FAILURE TO DISCONNECT THE SERVICE DISCONNECT SWITCH WHEN SERVICING THE VEHICLE CAN LEAD TO SEVERE PERSONAL INJURY OR DEATH BY ELECTROCUTION OR COMPONENT DAMAGE.

WARNING: DISCONNECT THE VEHICLE BATTERY PACK AT THE SERVICE DISCONNECT SWITCH PRIOR TO DISCONNECTING OR REMOVING ANY HIGH VOLTAGE COMPONENTS. RECONNECT AFTER VERIFYING SAFE CONNECTIONS ARE MADE. FAILURE TO FOLLOW THESE INSTRUCTIONS COULD RESULT IN SERIOUS PERSONAL INJURY OR DEATH.

WARNING: WHEN HANDLING BATTERIES OR WORKING UNDERNEATH THE VEHICLE, WEAR GOGGLES OR FACE SHIELD, RUBBER GLOVES, AND PROTECTIVE CLOTHING. FAILURE TO TAKE THE APPROPRIATE SAFETY PRECAUTIONS COULD RESULT IN SEVERE PERSONAL INJURY.

WARNING: THE VOLTAGE OF THE TRACTION MOTOR BATTERY PACK IS 336 VOLTS DC (NOMINAL). DO NOT ATTEMPT TO SERVICE THIS VEHICLE WITHOUT SPECIAL TRAINING. SEVERE SHOCKS CAN BE RECEIVED IF THE POWERTRAIN EQUIPMENT IS TAMPERED WITH.

WARNING: THE BATTERIES RELEASE POTENTIALLY FLAMMABLE GASES DURING CHARGING THAT COULD ACCUMULATE TO DANGEROUS LEVELS WITHIN NON–VENTILATED SPACES. DO NOT CHARGE THE VEHICLE IN A SMALL GARAGE OR CLOSED AREA WITHOUT VENTILATION.

WARNING: DO NOT ATTEMPT ANY VEHICLE MAINTENANCE WITH THE SERVICE DISCONNECT SWITCH IN THE ON POSITION.

WARNING: THE BATTERY PACK MAY GENERATE HYDROGEN GAS THAT IS FLAMMABLE AND EXPLOSIVE. KEEP FLAMES AND SPARKS AWAY FROM THE VEHICLE DURING OR IMMEDIATELY AFTER CHARGING!

WARNING: DO NOT ATTEMPT ANY SERVICE PROCEDURES WHILE THE VEHICLE IS CHARGING. PERFORMING REPAIR PROCEDURES WHILE CHARGING COULD CAUSE PERSONAL INJURY OR DEATH.

SPECIFIC SAFETY WARNINGS AND CAUTIONS (Continued)

WARNING: THE BATTERY TUB SERVICE AREA MUST BE DRY AND FREE OF ANY METAL DEBRIS. THE SERVICE AREA MUST ALSO BE ISOLATED FROM CONCRETE OR ELECTRICALLY CONDUCTIVE FLOORS SO THAT THE TECHNICIAN IS NOT STANDING ON OR IN CONTACT WITH ANY CONDUCTIVE SURFACE.

WARNING: DO NOT WEAR WRIST WATCHES, BELT BUCKLES, BRACELETS, RINGS, OR ANY LOOSE METAL JEWELRY WHILE WORKING ON THE VEHICLE.

WARNING: ONLY USE INSULATED TOOLS WHICH ELECTRICALLY ISOLATE YOURSELF FROM HIGH VOLTAGE AT ALL TIMES. HAND TOOLS MUST HAVE INSULATED HANDLES OR GRIPS. TOOLS SUCH AS SCREW DRIVERS, NUT DRIVERS, SOCKET WRENCH EXTENSIONS, ETC. MUST HAVE INSULATED SHAFTS.

WARNING: DO NOT ATTEMPT TO PHYSICALLY TOUCH BOTH ENDS OF THE BATTERY STRING (LOW TO HIGH SIDE) AT THE SAME TIME. THIS CONDITION WILL RESULT IN FATAL ELECTRICAL SHOCK.

WARNING: USE ONLY A HIGH IMPEDANCE DIGITAL VOLT–OHMMETER (DVOM) OTC 700 SERIES METER OR EQUIVALENT.

WARNING: ELECTRICAL CURRENT GREATER THAN FIVE (5) MILLIAMPERES CAN BE HAZARDOUS OR IN SOME CASES FATAL. THE AMOUNT OF CURRENT YOUR BODY WILL CONDUCT IS DEPENDENT UPON YOUR BODY'S RESISTANCE TO ELECTRICAL CURRENT AND THE APPLIED VOLTAGE OR POTENTIAL DIFFERENCE. THIS ELECTRIC POWERED VEHICLE HAS TREMENDOUS ELECTRICAL CAPACITY, BOTH IN VOLTAGE AND IN AVAILABLE CURRENT. A HIGH VOLTAGE CONDITION EXISTS WITH EITHER CHARGED OR DISCHARGED BATTERIES. ONE END OF ANY BATTERY OR STRING OF BATTERIES IS AT A HIGH POTENTIAL AND THE OTHER END IS AT A LOW POTENTIAL. NEVER PUT YOURSELF OR ANY CONDUCTIVE OBJECT BETWEEN THIS "POTENTIAL DIFFERENCE."

CAUTION: If a battery is ruptured or otherwise damaged to the point that it is leaking, it is to be considered defective and must be replaced. If any liquid is found leaking from a battery, always assume that this liquid is hazardous and corrosive. Neutralize the spill with white vinegar and dispose as a hazardous waste.

CAUTION: Before performing any vehicle maintenance, fully set the vehicle parking brake and block the front wheels, both front and rear. It is especially important to block the front wheels of this front–wheel drive electric powered vehicle. It is possible for certain combinations of failures to allow the vehicle to provide power to the powertrain.

SAFETY PRECAUTIONS FOR WELDING ON THE EPIC

In order to ensure safety while welding on the EPIC, the following precautions should be taken:

(1) Disable the battery pack by turning the service disconnect switch to Off.

(2) Disconnect and isolate the auxiliary battery negative cable.

(3) Make certain the shop ventilation system is on.

(4) Use a fan to blow away any potential gas from the welding site.

(5) Wait at least one hour after driving or charging the vehicle before attempting to weld any components.

(6) Disconnect both the Powertrain Controller Assembly (PCA) C1 and C5 connectors.

(7) Disconnect the C4 connector to the Battery Interface Center (BIC).

SERVICING SUB–ASSEMBLIES

Most system components are intended to be serviced as assemblies. Attempting to remove or repair certain assembly sub–components may result in personal injury and/or improper system operation. Only those components with approved repair and installation procedures in the service manual should be serviced.

VEHICLE MAINTENANCE PRECAUTIONS

Before disconnecting and removing any System Controller Unit (PCA) replacement units, make certain that:

(1) The service disconnect switch is turned to Off.
(2) The auxiliary battery negative cable is disconnected and isolated.
(3) The vehicle ignition switch is Off.
(4) The PCA C1 and C5 input power connectors are disconnected.

Failure to do so could cause damage to the PCA unit being replaced or to other PCA components.

When testing voltage or continuity at any interconnection, use the terminal side (not the wire end) of the connector. Do not probe a wire through the insulation; this will damage it and eventually cause it to fail because of corrosion.

Be careful when performing electrical testing to prevent accidental shorting of connector terminals. Such mistakes can damage fuses or components. Also, a second code could be set, making diagnosis of the original problem more difficult.

ROAD TESTING A COMPLAINT VEHICLE

Some complaints will require a test drive as part of the repair verification procedure. The purpose of the test drive is to try to duplicate the original code or symptom condition.

CAUTION: Before road testing a vehicle, be sure that all components are reassembled. During the test drive, do not try to read the scan tool screen while in motion. Do not hang the scan tool from the rear view mirror or operate it yourself. Have an assistant available to operate the scan tool.

HOISTING RECOMMENDATIONS

Refer to the Owner's Manual provided with the vehicle for proper emergency jacking procedures.

WARNING: THE HOISTING AND JACK LIFTING POINTS PROVIDED ARE FOR A COMPLETE VEHICLE. WHEN THE TRACTION MOTOR, BATTERY PACK, OR REAR SUSPENSION IS REMOVED FROM A VEHICLE, THE CENTER OF GRAVITY IS ALTERED, MAKING SOME HOISTING CONDITIONS UNSTABLE. PROPERLY SUPPORT OR SECURE VEHICLE TO HOISTING DEVICE WHEN THESE CONDITIONS EXIST.

WARNING: DO NOT POSITION HOISTING DEVICE ON TRACTION BATTERY TUB, HIGH VOLTAGE WIRING OR HIGH VOLTAGE COMPONENTS. HIGH VOLTAGE WIRING IS DIFFERENTIATED BY AN ORANGE STRIPED HARNESS. DAMAGE TO VEHICLE AND PERSONAL INJURY COULD RESULT.

CAUTION: Do not position hoisting device on suspension components or front crossmember. Damage to vehicle can result.

CAUTION: Do not use stand up props to support vehicle. The EPIC's higher weight may cause these props to fail.

NOTE: Because of the EPIC's higher weight, failure to lift the vehicle at designated locations may cause an unstable and dangerous situation.

To hoist or jack vehicle, refer to the following figure:

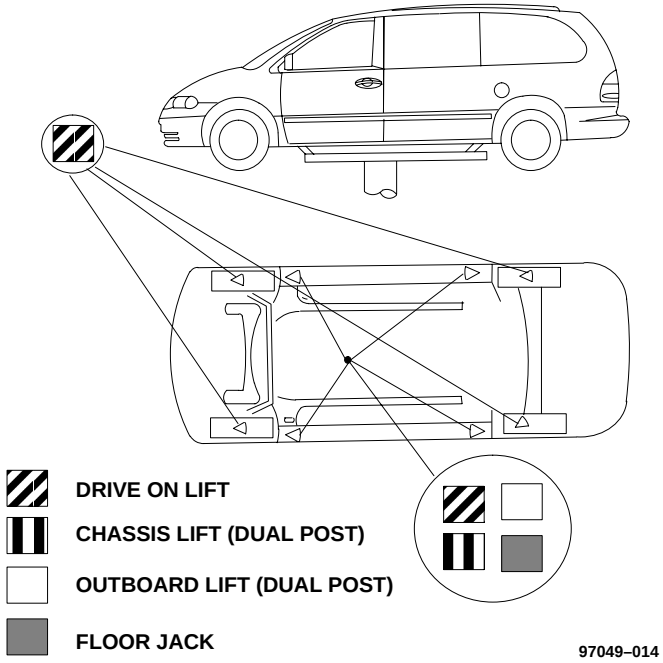

Fig. 1 Hoisting and Jacking Points

SPECIFICATIONS

DIMENSIONS
- Wheelbase – 113.3 in.
- Overall Length – 186.3 in.
- Overall Width – 75 in.
- Ground Clearance – 5.5 in.

POWERTRAIN
- 3 Phase A.C. Induction Motor
  –75 HP continuous, 100 HP peak
  –Oil Cooled

TRANSAXLE
- Single speed (with Park, Reverse, Neutral, and Drive positions)
- Front wheel drive

POWERTRAIN CONTROLLER
- Powertrain Controller Assembly (PCA)
- Onboard Diagnostics

POWER
- 336 Volt (Nominal) Sealed Nickel Metal Hydride Battery Pack (28 batteries in 14 modules) located underneath vehicle

RANGE
- 80–90 miles estimated combined city/highway

ACCELERATION
- 0–60 MPH – 17.0 seconds

TOP SPEED
- 80 MPH

PAYLOAD
- 5 Passenger + 175 lbs. or 925 lbs. total cargo capacity

GVW
- 5800 lbs.

CURB WEIGHT
- 4875 lbs.

FEATURES

CHASSIS
- Front Wheel Drive
- Power Brakes – Dual Hydraulic
  – ABS
  – Vented Front Disk
  – Self Adjusting Rear Drum
- Regenerative Braking System
- Power Steering – Electric Powered Hydraulic Steering (EPHS)
- 15” Wheels
- P205/75R15XL Momentum All Season Radial, 50 psi, Low Rolling Resistance Tires

EXTERIOR
- Breakaway Exterior Mirrors
- Center High Mounted Stop Lamp (CHMSL)
- Energy Absorbing Front and Rear Fascias
- Right Sliding Door with Child Guard Lock
- Halogen Headlights
- Solar Glass ahead of B–pillars; Solar Privacy Glass behind B–pillars

INTERIOR
- Electric Air Conditioning/Heat Pump
- AM/FM Radio with Integral Digital Clock
- Energy Absorbing Steering Column
- Dual Airbags
- Halogen Headlights
- Electric Heater/Defroster with Side Window Demisters
- Intermittent Windshield Wipers
- Heated Backlight
- Electric Wiper De–Icer

MISCELLANEOUS
- Fully Certified
  – Meets NHTSA Crash–Worthiness Requirements
  – Meets California Zero – Emission Vehicle Requirements
- Meets or Exceeds All DOT Standards

NOTE: Specifications and features are believed to be correct at the time of publication. DaimlerChrysler reserves the right to make product changes without notice or obligation.

EPIC ACRONYMS

A/C	Air Conditioning
APC	Auxiliary Power Converter
BEMS	Battery Energy Management System
BIC	Battery Interface Center
BMM	Battery Monitoring Modules
CCD	Chrysler Collision Detection
CHMSL	Center High Mounted Stop Lamp
CVC	Chassis Vector Controller
DBS	Dielectric Breakdown Sensor
DOD	Depth Of Discharge
EPHS	Electric Powered Hydraulic Steering
EBL	Electric Back Light
EMI	Electromagnetic Interference
EPIC	Electric Powered Interurban Commuter
ESD	Electrostatic Discharge
EVSE	Electric Vehicle Supply Equipment
EXV	Electronic Expansion Valve
EWD	Electric Wiper De-Icer
HVAC	Heating Ventilation Air Conditioning
I/P	Instrument Panel
IGBT	Insulated Gate Bipolar Transistor
LED	Light Emitting Diode
LVPS/APC	Low Voltage Power Supply/Auxiliary Power Converter
MCAN	Motorola Controller Area Network
MCM	Main Control Module
PCA	Powertrain Controller Assembly
PMC	Pump Motor Controller
PTC	Positive Temperature Coefficient
PWM	Pulse Width Modulation
SCI	Serial Communications Interface
SOC	State Of Charge
SG	Specific Gravity
TRS	Transmission Range Sensor
TXV	Thermal Expansion Valve
VCMM	Voltage Current Measurement Module

THIS PAGE INTENTIONALLY LEFT BLANK

SUSPENSION

TABLE OF CONTENTS

	PAGE
DESCRIPTION	1
OPERATION	1
DIAGNOSIS AND TESTING	3
PRE–WHEEL ALIGNMENT INSPECTION	6
ALIGNMENT SPECIFICATIONS	7

DESCRIPTION

This section includes specifications that are unique to the EPIC minivan. Please refer to the standard 1999 NS service manual for information not found in this section.

OPERATION

The suspension used in the EPIC is similar to the All–Wheel Drive gas version of the NS. The rear suspension utilizes leaf spring spacers to compensate for the additional weight of the battery pack (Fig. 1).

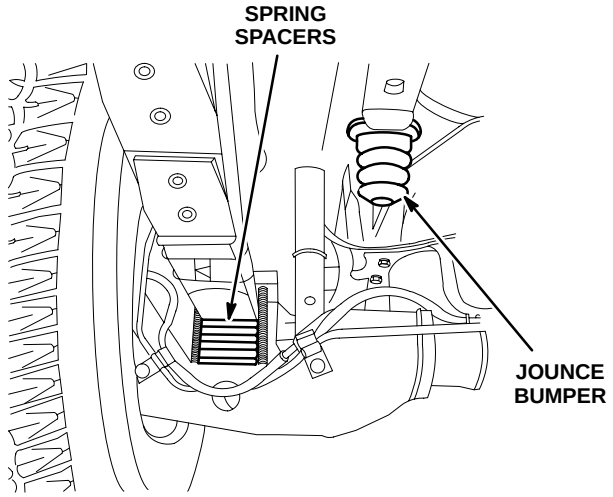

Fig. 1 Rear Suspension Spacers

Wheel alignment is the proper adjustment of all the interrelated suspension angles affecting the running and steering of the front and rear wheels of the vehicle.

The method of checking front and rear wheel alignment will vary depending on the type of equipment being used. The instructions furnished by the manufacturer of the equipment should always be followed, with the exception that the wheel alignment specifications recommended by DaimlerChrysler should always be used. The DaimlerChrysler recommended alignment specifications are listed in Specifications at the end of this group.

There are six basic factors which are the foundation to front wheel alignment. These are vehicle height, caster, camber, toe–in, steering axis inclination and toe–out turns. Of the six basic factors, only toe–in is normally mechanically adjustable on the vehicle (Fig. 2).

OPERATION (Continued)

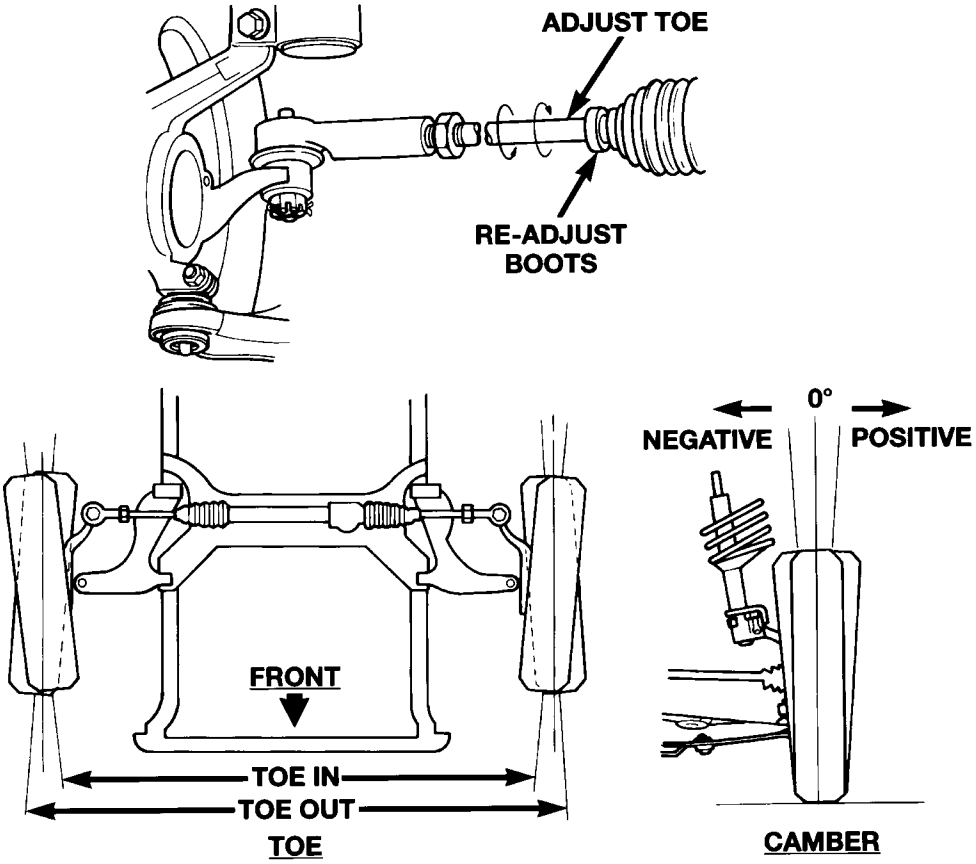

Fig. 2 Front Suspension Alignment Angles

Camber adjustment is allowed in the event that a vehicle is involved in an accident and after repairs are made meeting manufacturers tolerance specifications, the camber setting will not meet manufacturers specifications. If camber adjustment is required, refer to the following Service Camber Adjustment Procedure for the required steps to be followed.

CAUTION: Do not attempt to modify any suspension or steering components to meet vehicle alignment specifications, by heating and/or bending.

Alignment checks and adjustments should be made in the following sequence.

(1) Camber
(2) Toe

Camber is the number of degrees the top of the wheel and tire assembly is tilted inboard or outboard from a true vertical line. Inboard tilt is negative camber. Outboard tilt is positive camber.

Excessive camber is a tire wear factor: negative camber causes wear on the inside of the tires tread surface, while positive camber causes wear to the outside of the tires tread surface. See Front Wheel Drive Specifications for **Camber** settings.

Toe is measured in degrees or inches and is the distance the front edges of the tires are closer (or farther apart) than the rear edges. See Front Wheel Drive Specifications for **Toe** settings.

DIAGNOSIS AND TESTING

CONDITION	POSSIBLE CAUSE	CORRECTION
Front End Whine On Turns	1. Defective wheel bearing 2. Incorrect wheel alignment 3. Worn tires	1. Replace wheel bearing 2. Check and reset wheel alignment 3. Replace tires
Front End Growl Or Grinding On Turns	1. Defective wheel bearing 2. Engine mount grounding 3. Worn or broken C/V joint 4. Loose wheel lug nuts 5. Incorrect wheel alignment 6. Worn tires 7. Front strut pin in upper strut mount	1. Replace wheel bearing 2. Check for motor mount hitting frame rail and reposition motor as required. 3. Replace C/V joint 4. Verify wheel lug nut torque 5. Check reset wheel alignment 6. Replace tires 7. Replace the front strut upper mount and bearing
Front End Clunk or Snap On Turns	1. Loose lug nuts 2. Worn or broken C/V joint 3. Worn or loose tie rod 4. Worn or loose ball joint 5. Worn/loose control arm bushing 6. Loose stabilizer bar 7. Loose strut mount to body attachment 8. Loose crossmember bolts	1. Verify wheel lug nut torque 2. Replace C/V joint 3. Tighten or replace tie rod end 4. Tighten or replace ball joint 5. Replace control arm bushing 6. Tighten stabilizer bar to specified torque 7. Tighten strut attachment to specified torque 8. Tighten crossmember bolts to specified torque
Front End Whine With Vehicle Going Straight At A Constant Speed	1. Defective wheel bearing 2. Incorrect wheel alignment 3. Worn tires 4. Worn or defective transaxle gears or bearings	1. Replace wheel bearing 2. Check and reset wheel alignment 3. Replace tires 4. Replace transaxle gears or bearings
Front End Growl Or Grinding With Vehicle Going Straight At A Constant Speed	1. Motor mount grounding 2. Worn or broken C/V joint	1. Reposition motor as required 2. Replace C/V joint
Front End Whine When Accelerating or Decelerating	1. Worn or defective transaxle gears or bearings	1. Replace transaxle gears or bearings

CONDITION	POSSIBLE CAUSE	CORRECTION
Front End Clunk When Accelerating Or Decelerating	1. Worn or broken engine mount	1. Replace engine mount
	2. Worn or defective transaxle gears or bearings	2. Replace transaxle gears or bearings
	3. Loose lug nuts	3. Verify wheel lug nut torque
	4. Worn or broken C/V joint	4. Replace C/V joint
	5. Worn or loose ball joint	5. Tighten or replace ball joint
	6. Worn or loose control arm bush ing	6. Replace control arm bushing
	7. Loose crossmember bolts	7. Tighten crossmember bolts to specified torque
	8. Worn tie rod end	8. Replace tie rod end
Road Wander	1. Incorrect tire pressure	1. Inflate tires to recommended pressure
	2. Incorrect front or rear wheel toe	2. Check and reset wheel toe
	3. Worn wheel bearings	3. Replace wheel bearing
	4. Worn control arm bushings	4. Replace control arm bushing
	5. Excessive friction in steering gear	5. Replace steering gear
	6. Excessive friction in steering shaft coupling	6. Replace steering coupler
	7. Excessive friction in strut upper bearing	7. Replace strut bearing
Lateral Pull	1. Unequal tire pressure	1. Inflate all tires to recommended pressure
	2. Radial tire lead	2. Perform lead correction procedure
	3. Incorrect front wheel camber	3. Check and reset front wheel camber
	4. Power steering gear imbalance	4. Replace power steering gear
	5. Wheel braking	5. Correct braking condition causing lateral pull

CONDITION	POSSIBLE CAUSE	CORRECTION
Excessive Steering Free Play	1. Incorrect steering gear adjustment	1. Adjust or replace steering gear
	2. Worn or loose tie rod ends	2. Replace or tighten tie rod ends
	3. Loose steering gear mounting bolts	3. Tighten steering gear bolts to specified torque
	4. Loose or worn steering shaft coupler	4. Replace steering shaft coupler
Excessive Steering Effort	1. Low tire pressure	1. Inflate all tires to recommended pressure
	2. Lack of lubricant in steering gear	2. Replace steering gear
	3. Low power steering fluid level	3. Fill power steering fluid reservoir to correct level
	4. Loose power steering pump drive belt	4. Correctly adjust power steering pump drive belt
	5. Lack of lubricant in ball joints	5. Lubricate or replace ball joints
	6. Steering gear malfunction	6. Replace steering gear
	7. Lack of lubricant in steering coupler	7. Replace steering coupler

PRE-WHEEL ALIGNMENT INSPECTION

Before any attempt is made to change or correct the wheel alignment factors, the following part inspection and the necessary corrections should be made to the parts which influence the steering of the vehicle.

(1) Check and inflate all tires to recommended pressure. All tires should be the same size and in good condition and have approximately the same wear. Note the type of tread wear which will aid in diagnosing, see Wheels and Tires, Group 22 in the standard NS service manual.

(2) Check front wheel and tire assembly for radial runout.

(3) Inspect lower ball joints and all steering linkage for looseness.

(4) Check for broken or sagged front and rear springs.

(5) Check vehicle ride height to verify it is within specifications.

(6) Alignment **MUST** only be checked after the vehicle has the following areas inspected and/or adjusted. Recommended tire pressures (50 psi), battery pack attached properly underneath the vehicle, no passenger or luggage compartment load and is on a level floor or a properly calibrated alignment rack.

ALIGNMENT SPECIFICATIONS

All alignment specifications are to be checked and adjusted with the vehicle at its correct ride height. Refer to the ride height specifications listed in the following alignment specifications chart.

SPECIFICATION	ALIGNMENT ANGLE
* FRONT INDIVIDUAL CAMBER IN DEGREES . . .	+0.15° +/– 0.40°
Front Side to Side Camber Difference Not to Exceed	0.00° – 0.50° MAX
** FRONT INDIVIDUAL CASTER IN DEGREES . . .	+1.40 °+/– 1.00°
Front Side to Side Caster Difference Not to Exceed	0.00° – 1.00° MAX
*** FRONT INDIVIDUAL TOE RIGHT/LEFT	+0.05 °+/– 0.10°
FRONT TOTAL TOE . . . . . Specified in Degrees	+0.10 °+/– 0.20°
FRONT SIDE TO SIDE TOE DIFFERENTIAL	0.00° – 0.06° MAX
**** REAR INDIVIDUAL CAMBER IN DEGREES . .	–0.10°+/– 0.25°
REAR INDIVIDUAL TOE RIGHT/LEFT	0.00°+/– 0.40°
**** REAR TOTAL TOE . . . . . Specified in Degrees TOE OUT: When Backed On Alignment Rack Is TOE IN When Driving	0.00°+/– 0.40°
**** REAR THRUST ANGLE	0.00°+/– 0.30°
STEERING WHEEL ANGLE	0.00°+/– 2.50°
FRONT RIDE HEIGHT (MEASURED AT TOP OF FENDER WHEEL OPENING)	783.5 mm +/– 10.0 mm
FRONT RIDE HEIGHT SIDE TO SIDE DIFFERENTIAL	0.0 mm 12.5 mm MAX
[illegible]	802.0 mm +/– 10.0 mm
REAR RIDE HEIGHT SIDE TO SIDE DIFFERENTIAL	0.0 mm 12.5 mm MAX

* Camber is adjustable using Mopar Camber Adjustable Service Kit. Refer to the Mopar Parts Catalog for the required service kit part number.

** Caster is not adjustable. If found to be out of specification, check for proper ride heights and damaged/worn out suspension components and replace as necessary.

*** Toe–In is positive

**** Toe, Camber, and thrust angle are not adjustable. If found to be out of specification check for proper ride heights and damaged/worn out suspension components and replace as necessary.

***** When measuring ride heights: 1) Ensure that the tire pressures are correct. 2) Jounce the vehicle at the bumper several times and release at the bottom of the stroke. 3) Measure from the ground to the outboard, lower, center section of the fender wheel well opening. Ride heights are not adjustable. If found to be out of specification, check for damaged/worn out suspension components and replace as necessary.

THIS PAGE INTENTIONALLY LEFT BLANK

BRAKES

TABLE OF CONTENTS

	PAGE
DESCRIPTION	**1**
OPERATION	**1**
MASTER CYLINDER	1
POWER BRAKE BOOSTER	1
VACUUM PUMP/MOTOR ASSEMBLY	1
VACUUM PUMP/MOTOR RELAY MODULE	2
ABS–HYDRAULIC CONTROL UNIT (Integrated)	2
PROPORTIONING VALVE	2
REGENERATIVE BRAKING	2
MASTER CYLINDER PRESSURE SENSORS	2
TONE WHEELS	3
SPEED SENSORS	3
DIAGNOSIS AND TESTING	**4**
PUMP WILL NOT RUN	4
PUMP RUNS CONTINUOUSLY	6
COMPONENT SERVICE	**7**
MASTER CYLINDER PRESSURE SENSORS	7
VACUUM PUMP/MOTOR ASSEMBLY	7
VACUUM PUMP/MOTOR RELAY MODULE	8
TORQUE SPECIFICATIONS	**9**

DESCRIPTION

The hydraulic brake system of the EPIC is the same as the short wheel base NS from the proportioning valve forward, except for the master cylinder and proportioning valve. The hydraulic brake system from the proportioning valve to the rear wheel cylinders is the same as the All Wheel Drive NS. Refer to the 1999 standard NS service manual for additional information.

OPERATION

MASTER CYLINDER

The master cylinder of the EPIC operates exactly like that of the gasoline version, with one exception. The primary and secondary ports of the master cylinder include pressure sensors that monitor brake line pressure. The two pressure sensors are identical to each other and can be replaced as separate components. The primary and secondary hydraulic lines connect to the master cylinder. If either primary or secondary pressure is out of range, and no open circuit is detected, the Powertrain Controller Assembly (PCA) uses the higher of the two values. The Red Brake Lamp is turned On in this case. If both values are out of range, the Service Required Lamp is turned On. Fault codes from the PCA will direct the technician to the faulty sensor.

POWER BRAKE BOOSTER

The Power Brake Booster operates like the gasoline version, with one difference. The vacuum is supplied to the Power Brake Booster by an electric Vacuum Pump/Motor assembly. A vacuum hose connects the power brake booster to the vacuum pump. A relay module controls the operation of the Pump/Motor assembly.

VACUUM PUMP/MOTOR ASSEMBLY

The Vacuum Pump/Motor assembly supplies vacuum to the Power Brake Booster.

The Vacuum Pump/Motor assembly is bolted to the traction motor cross member with a plastic bracket. The Vacuum Pump/Motor assembly is connected to the Power Brake Booster by a vacuum hose.

VACUUM PUMP/MOTOR ASSEMBLY (Continued)

The Vacuum Pump/Motor assembly has two 2-way connectors. One 2-way connector supplies 12 volts and ground to the Vacuum Pump/Motor. The other 2-way connector supplies a sense line and ground to the Vacuum Pump Switch from the Vacuum Pump/Motor Relay Module, and a vacuum signal from the pump/motor assembly to the relay module. The Vacuum Pump/Motor assembly is controlled by the Vacuum Pump/Motor Relay Module. The Vacuum Pump/Motor and Vacuum Switch can only be serviced as an assembly.

VACUUM PUMP/MOTOR RELAY MODULE

The Vacuum Pump/Motor Relay Module controls the Vacuum Pump/Motor assembly. The Relay Module looks like a combo flasher relay and is located behind the junction box (under the dash).

ABS–HYDRAULIC CONTROL UNIT (Integrated)

The Hydraulic Control Unit (HCU) is found in the same location as the gasoline version. The HCU used with the Teves Mark 20 ABS is different from the HCU used on previous Chrysler products with ABS. The HCU used on the Teves Mark 20 ABS system is called an integrated HCU, because the HCU and the Controller Antilock Brakes (CAB) are integrated into one unit. This differs from previous Chrysler products with ABS, where the HCU and the CAB were separate components located in different areas of the vehicle. The EPIC uses the same HCU as the a standard NS without traction control, with one difference. The HCU wiring harness on the EPIC has a “T–tap” that allows the PCA to monitor ABS activity.

CAUTION: The only parts of the HCU that can be replaced (serviced) are the CAB and HCU mounting bracket. The remaining components of the HCU are not serviceable. No attempt should ever be made to remove or service any other parts of the HCU. This is due to the concern of contamination entering the HCU while performing a service procedure.

CAUTION: At no time when servicing the HCU should a 12-volt power source be applied to any electrical connector of the HCU.

PROPORTIONING VALVE

The proportioning valve of the EPIC has the same appearance as the standard NS with ABS. The proportioning valve is not needed for optimal braking performance. Therefore the proportioning valve of the EPIC has no internal springs, seats, seals or valving. It is an empty shell and can only be serviced as an assembly.

NOTE: If the brake lines from the HCU to the proportioning valve need to be replaced, the battery pack may need to be removed. See “Battery Pack Removal and Installation Procedure,” section 8B of this manual.

REGENERATIVE BRAKING

The Regenerative Braking system recharges the traction battery pack by using the traction motor as a generator during braking. The traction motor is mechanically attached to the wheels at all times, in all gears, including neutral. If the motor is turned by an external source (wheel momentum as vehicle is driven), it creates voltage like a generator. When the vehicle is moving and the operator presses on the brake pedal, the master cylinder pressure sensors send a signal to the PCA. The PCA receives the signal from the pressure sensors and vehicle speed sensors, and allows the voltage generated by the motor to flow to the battery pack, to assist in recharging. In the event of an ABS stop the REGEN is disabled during the stop, and reinitiated after the stop. This is done for maximum ABS effectiveness.

MASTER CYLINDER PRESSURE SENSORS

The Master Cylinder Pressure Sensors are located on the master cylinder and can be changed separately. They sense brake pedal pressure and send a signal to the PCA. The PCA reads this signal and adjusts REGEN current to the battery pack accordingly. The sensor wires are marked for the specific primary or secondary locations.

TONE WHEELS

The ABS rear Tone Wheels on the EPIC are the same as the standard gasoline version. The rear Tone Wheels are serviced using a specific tool to pull the Bearing/Tone Wheel assembly.

SPEED SENSORS

The rear Speed Sensors on the EPIC are the same as the All Wheel Drive (AWD) gasoline version.

DIAGNOSIS AND TESTING

VACUUM PUMP/MOTOR ASSEMBLY DIAGNOSIS

PUMP WILL NOT RUN

STEP	ACTION	YES	NO
1	DISABLE THE TRACTION BATTERY PACK BY TURNING THE SERVICE DISCONNECT SWITCH TO OFF. REMOVE POWER DISTRIBUTION CENTER (PDC) COVER AND LOCATE VACUUM PUMP FUSE. IS THE VACUUM PUMP 30 AMP FUSE BLOWN?	REPLACE FUSE AND VERIFY VACUUM PUMP OPERATION.	GO TO STEP 2.
2	LOCATE AND CHECK 10 AMP FUSE #12 IN JUNCTION BLOCK. IS 10 AMP FUSE BLOWN?	REPLACE FUSE AND VERIFY SYSTEM OPERATION.	GO TO STEP 3.
3	TURN IGNITION SWITCH TO RUN. DISCONNECT VACUUM LINE AT THE VACUUM PUMP. DOES THE VACUUM PUMP RUN?	REPAIR PINCHED OR BLOCKED. VACUUM LINE OR VACUUM CHECK VALVE AND VERIFY SYSTEM OPERATION.	GO TO STEP 4.
4	DISCONNECT VACUUM PUMP SWITCH. DOES THE VACUUM PUMP RUN?	BAD VACUUM. SWITCH MUST REPLACE VACUUM PUMP/MOTOR ASSEMBLY.	GO TO STEP 5.
5	CHECK FOR 12 VOLTS AT VACUUM PUMP CONNECTOR C2 PIN 1. **VACUUM PUMP -C2** CAV / COLOR / FUNCTION 1 / RD / VACUUM PUMP RELAY OUTPUT 2 / BK / GROUND 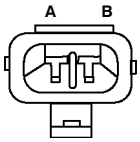 ARE 12 VOLTS PRESENT AT VACUUM PUMP?	GO TO STEP 6.	GO TO STEP 7.
6	CHECK FOR CONTINUITY TO GROUND AT VACUUM PUMP CONNECTOR C2 PIN 2. IS CONTINUITY TO GROUND PRESENT ?	REPLACE VACUUM PUMP AND VERIFY SYSTEM OPERATION.	REPAIR GROUND CIRCUIT AS NECESSARY AND VERIFY SYSTEM OPERATION.
7	UNPLUG CONNECTOR AT VACUUM PUMP RELAY MODULE. CHECK VACUUM PUMP/MOTOR RELAY MODULE PIN 2 FOR 12 VOLTS. **VACUUM PUMP -C2** CAV / COLOR / FUNCTION 1 / RD / VACUUM PUMP RELAY OUTPUT 2 / BK / GROUND 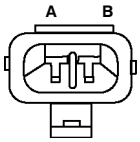 **VACUUM PUMP RELAY MODULE** CAV / COLOR / FUNCTION 2 / RD / VACUUM PUMP MOTOR FEED 5 / YL / FUSED B (+) 6 / BK / GROUND 8 / WT / FUSED IGN. (RUN) 9 / RD / VACUUM PUMP SWITCH FEED 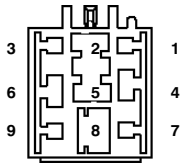 ARE 12 VOLTS PRESENT AT VACUUM PUMP/MOTOR RELAY MODULE?	LOCATE AND REPAIR OPEN IN CIRCUIT FROM VACUUM PUMP RELAY MODULE CONNECTOR PIN 2 TO VACUUM PUMP CONNECTOR PIN 1, AND VERIFY SYSTEM OPERATION.	GO TO STEP 8.

VACUUM PUMP/MOTOR ASSEMBLY DIAGNOSIS

PUMP WILL NOT RUN CONTINUED

STEP	ACTION	YES	NO
8	CHECK CONNECTOR PIN 5 FOR 12 VOLTS. **VACUUM PUMP RELAY MODULE** CAV / COLOR / FUNCTION 2 / RD / VACUUM PUMP MOTOR FEED 5 / YL / FUSED B (+) 6 / BK / GROUND 8 / WT / FUSED IGN. (RUN) 9 / RD / VACUUM PUMP SWITCH FEED 3 2 1 6 5 4 9 8 7 ARE 12 VOLTS PRESENT ?	GO TO STEP 9.	LOCATE AND REPAIR OPEN IN CIRCUIT FROM CONNECTOR PIN 5 TO PDC, AND VERIFY SYSTEM OPERATION.
9	CHECK CONNECTOR PIN 8 FOR 12 VOLTS. ARE 12 VOLTS PRESENT?	GO TO STEP 10.	LOCATE AND REPAIR BREAK IN CIRCUIT FROM CONNECTOR PIN 8 TO JUNCTION BLOCK, AND VERIFY SYSTEM OPERATION.
10	CHECK FOR CONTINUITY TO GROUND AT CONNECTOR PIN 6. IS THERE CONTINUITY TO GROUND PRESENT?	REPLACE VACUUM PUMP RELAY MODULE AND VERIFY SYSTEM OPERATION.	LOCATE AND REPAIR OPEN IN CIRCUIT FROM CONNECTOR PIN 6 TO GROUND AND VERIFY SYSTEM OPERATION.

VACUUM PUMP/MOTOR ASSEMBLY DIAGNOSIS

PUMP RUNS CONTINUOUSLY

STEP	ACTION	YES	NO
1	DISABLE THE TRACTION BATTERY PACK BY TURNING THE SERVICE DISCONNECT SWITCH TO OFF. TURN IGNITION KEY TO RUN. REMOVE HOSE FROM VACUUM PUMP AND PLACE THUMB OVER HOLE IN NIPPLE ON VACUUM PUMP. DOES VACUUM PUMP SHUT OFF?	LOCATE LEAK IN SYSTEM, REPAIR AS NECESSARY, AND VERIFY SYSTEM OPERATION.	GO TO STEP 2.
2	INSTALL JUMPER ACROSS VACUUM SWITCH CONNECTOR C1 PIN 1 TO PIN 2. **VACUUM PUMP -C1** CAV / COLOR / FUNCTION 1 / RD / VACUUM PUMP RELAT OUT-PUT 2 / BK / GROUND 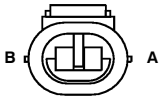 DOES VACUUM PUMP SHUT OFF?	REPLACE VACUUM PUMP/ MOTOR ASSEMBLY.	REPLACE VACUUM PUMP/MOTOR RELAY MODULE AND VERIFY SYSTEM OPERATION.

COMPONENT SERVICE

MASTER CYLINDER PRESSURE SENSORS

REMOVAL

(1) Disable the traction battery pack by turning the high voltage service disconnect switch to Off.
(2) Disconnect and remove the auxiliary battery.
(3) Disconnect PCA C3 connector.
(4) Disconnect master cylinder pressure sensor connector(s) (Fig. 1).

NOTE: The master cylinder pressure sensor connectors are marked. If not they must be marked and installed in correct master cylinder port location.

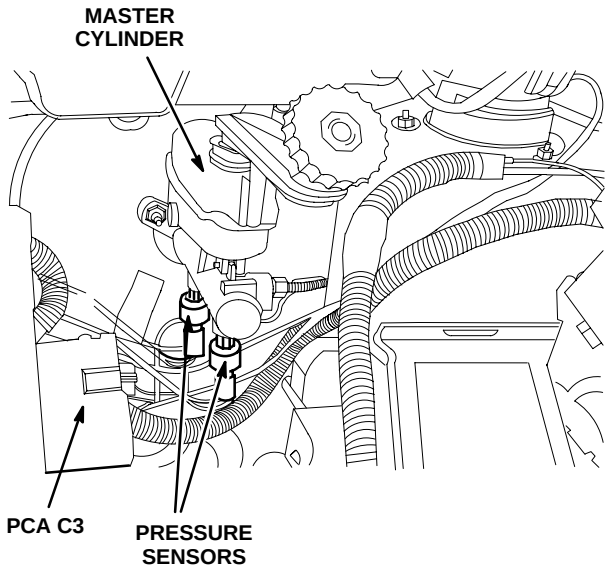

Fig. 1 Master Cylinder Pressure Sensors

NOTE: Place an absorbent towel under pressure sensors during the procedure to contain any brake fluid spillage.

(5) Unscrew pressure sensor(s) and remove.

INSTALLATION

(1) Install master cylinder pressure sensor(s) and finger tighten.
(2) Have someone assist by slowly pressing and holding the brake pedal one time to force any air out of the system. Torque to 12 N•m (110 in. lbs.).

NOTE: Place an absorbent towel under pressure sensors during this procedure to contain any brake fluid spillage.

NOTE: The master cylinder pressure sensor connectors are marked. If not they must be marked and installed in correct master cylinder port location.

(3) Install connector(s).
(4) Connect PCA C3 connector.
(5) Install auxiliary battery.
(6) Connect auxiliary battery cables.
(7) Enable the traction battery pack by turning the high voltage service disconnect switch to On.

VACUUM PUMP/MOTOR ASSEMBLY

REMOVAL

(1) Disable the traction battery pack by turning the high voltage service disconnect switch to Off.
(2) Disconnect and remove the auxiliary battery.
(3) Disconnect PCA C3 connector and route harness as to lay on top of PCA.
(4) Disconnect PCA C2 connector.
(5) Disconnect vacuum pump/motor assembly connectors (2).
(6) Remove lower bolt from vacuum pump/motor assembly mounting bracket.
(7) Remove upper bolt from vacuum pump/motor assembly mounting bracket.
(8) Remove vacuum hose at brake power booster.
(9) Remove vacuum pump/motor assembly (Fig. 2).

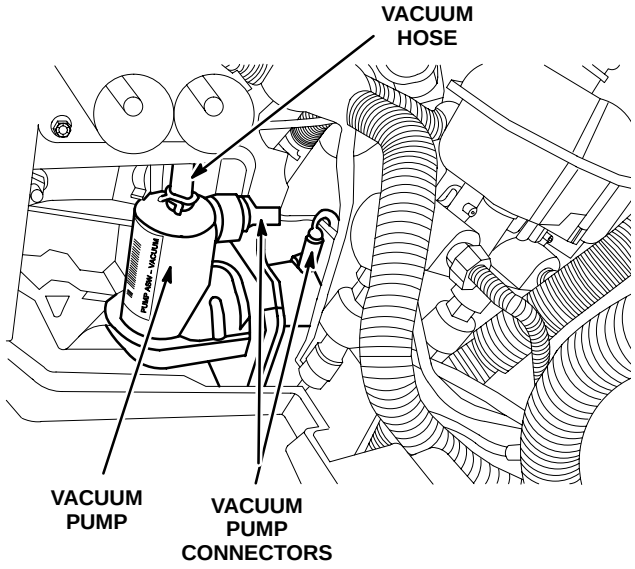

Fig. 2 Vacuum Pump/Motor Assembly

VACUUM PUMP/MOTOR ASSEMBLY (Continued)

INSTALLATION

(1) Install vacuum pump/motor assembly.
(2) Install upper vacuum pump/motor assembly bolt and leave loose enough to move assembly to ease installation of lower bolt.
(3) Install vacuum hose to brake power booster.
(4) Install lower vacuum pump/motor assembly bolt and torque to 15 N•m (135 in. lbs.).
(5) Torque upper vacuum pump/motor assembly bolt to 15 N•m (135 in. lbs.).
(6) Install vacuum pump/motor assembly connectors (2).
(7) Install PCA C2 connector.
(8) Install PCA C3 connector.
(9) Install auxiliary battery.
(10) Enable the traction battery pack by turning the high voltage service disconnect switch to On.

VACUUM PUMP/MOTOR RELAY MODULE

REMOVAL

(1) Disable the traction battery pack by turning the high voltage service disconnect switch to Off.
(2) Disconnect and isolate auxiliary battery negative cable.
(3) Remove Junction Block (refer to gasoline version service manual) (Fig. 3).

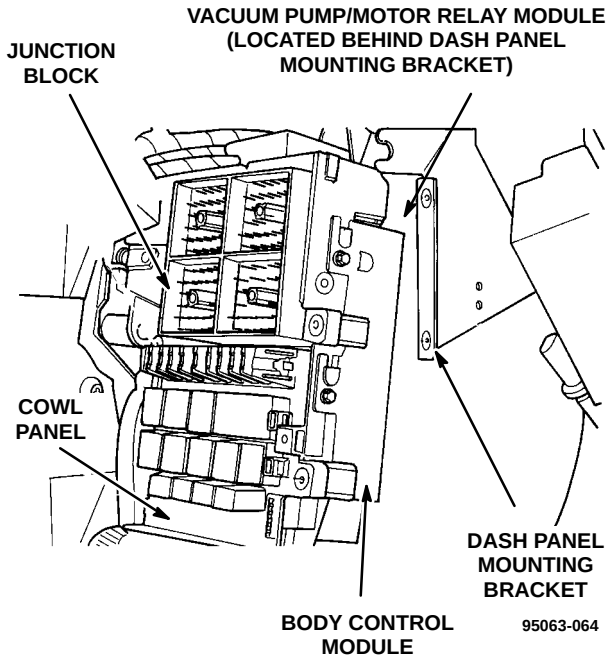

Fig. 3 Vacuum Pump/Motor Relay Module

(4) Remove Body Control Module (BCM) (refer to gasoline version service manual).
(5) Disconnect 9 way connector at Vacuum Pump/Motor Relay Module.
(6) Remove mounting nut.
(7) Remove Vacuum Pump/Motor Relay Module (Fig. 4).

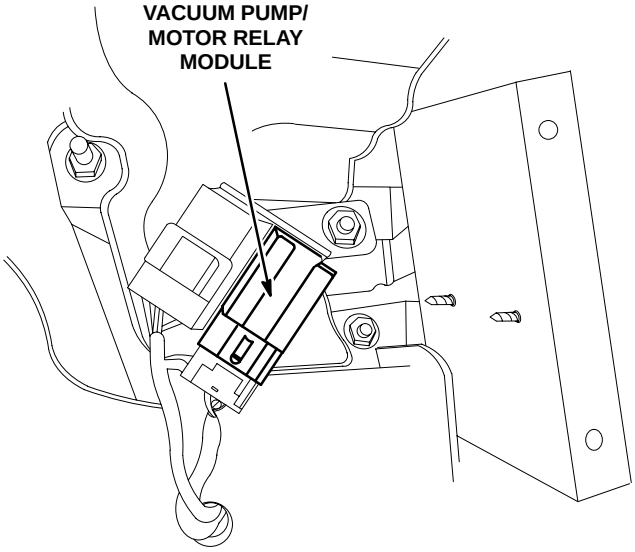

Fig. 4 Vacuum Pump/Motor Relay Module

INSTALLATION

(1) Install Vacuum Pump/Motor Relay Module.
(2) Install mounting nut. Torque to 22 N•m (200 in. lbs.).
(3) Install BCM.
(4) Install Junction Block.
(5) Connect auxiliary battery negative cable.
(6) Enable the traction battery pack by turning the high voltage service disconnect switch to On.

TORQUE SPECIFICATIONS

DESCRIPTION	TORQUE
Master Cylinder Pressure Sensors	12 N•m (110 in. lbs.)
Vacuum Pump/Motor Mounting Bolts	15 N•m (135 in. lbs.)
Vacuum Pump/Motor Relay Module Mounting Nut	22 N•m (200 in. lbs.)

THIS PAGE INTENTIONALLY LEFT BLANK

COOLING

TABLE OF CONTENTS

PAGE PAGE

MOTOR COOLING **7A**
BATTERY COOLING **7B**

THIS PAGE INTENTIONALLY LEFT BLANK

MOTOR COOLING 7A

TABLE OF CONTENTS

PAGE

DESCRIPTION **1**
OPERATION **1**

COMPONENT SERVICE **2**
COOLING MODULE 2
FAN ASSEMBLY MODULE 2
OIL COOLER 3
OIL COOLING PUMP 4

TORQUE SPECIFICATIONS **5**

DESCRIPTION

The traction motor cooling system provides cooling to control the temperature of the stator in the traction motor and provides lubrication to the traction motor.

OPERATION

The oil pump circulates oil through the cooling module and the traction motor. Castrol Brayco® Micronic–881 oil is used. Oil flows from the pump to the traction motor. After the oil leaves the motor, it is cooled by flowing through the oil cooler which is part of the cooling module assembly. The following are specifications for the oil pump:

- 1/4 HP at 3600 RPM
- 3.5 GPM (40 psi @ 25%)
- Weight: 11 lbs.

COMPONENT SERVICE

COOLING MODULE

REMOVAL

(1) Disable the traction battery pack by turning the high voltage service disconnect switch to Off.
(2) Disconnect and isolate the auxiliary battery negative cable.
(3) Drain turbine oil.
(4) Discharge A/C system (see “HVAC Service” in this manual).
(5) Remove valance panel over top of cooling module.
(6) Remove screws attaching cooling module to upper crossmember.
(7) Detach hood release cable.
(8) Unbolt power steering reservoir from upper crossmember.
(9) Remove upper crossmember.
(10) Disconnect the wiring harness connector on the left side of the fan module.
(11) Loosen oil cooler hose clamps and remove oil cooler hoses from oil pump and PCA.
(12) Disconnect A/C lines from filter/dryer and compressor.
(13) Remove cooling module (Fig. 1).

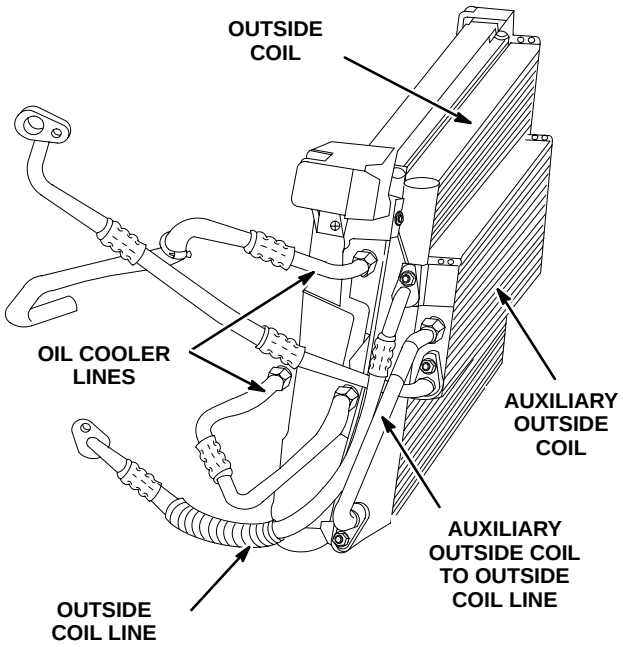

Fig. 1 Cooling Module

INSTALLATION

(1) Install cooling module.
(2) Connect A/C lines to filter/dryer and compressor.
(3) Connect oil cooler hoses to oil pump and PCA and tighten clamps.
(4) Connect wiring harness connector to fan module.
(5) Install upper crossmember.
(6) Install screws attaching cooling module to crossmember.
(7) Install hood release cable.
(8) Install power steering reservoir.
(9) Install valance panel over top of cooling module.
(10) Fill turbine oil. Refer to “Oil Fill Procedure” in powertrain group 9.
(11) Connect auxiliary battery negative cable.
(12) Enable the traction battery pack by turning the high voltage service disconnect switch to On.
(13) Charge A/C System (see “HVAC Charging” in this manual).

FAN ASSEMBLY MODULE

REMOVAL

(1) Disable the traction battery pack by turning the high voltage service disconnect switch to Off.
(2) Disconnect and isolate the auxiliary battery negative cable.
(3) Remove the upper core support shield.
(4) Unbolt power steering reservoir.
(5) Remove the upper core support.
(6) Disconnect the fan connector.
(7) Remove the fan assembly/module (fig. 2).

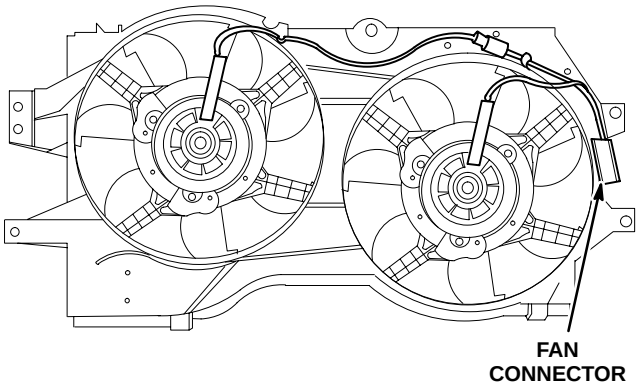

Fig. 2 Fan Assembly Module

INSTALLATION

(1) Install the fan assembly/module.

FAN ASSEMBLY MODULE (Continued)

(2) Connect the fan connector.
(3) Install the upper core support.
(4) Install the power steering reservoir.
(5) Install upper core support shield.
(6) Connect the auxiliary negative cable.
(7) Enable the traction battery pack by turning the high voltage service disconnect switch to On.

OIL COOLER

REMOVAL

(1) Disable the traction battery pack by turning the high voltage service disconnect switch to Off.
(2) Disconnect and isolate the auxiliary battery negative cable.
(3) Remove cooling module (Refer to “Cooling Module Removal” this section).
(4) Remove screws attaching A/C lines to block on outside coil. Be careful not to damage O ring seals.
(5) Remove oil cooler lines by using a flare nut wrench to loosen tube nuts then removing them.
(6) Remove upper clips (2) that attach the fan module to the cooling module support frame.
(7) Remove fan module by pulling out of lower clips.
(8) Remove A/C outside coil mounting screws (4).
(9) Remove A/C outside coil.
(10) Remove oil cooler mounting screws (4).
(11) Remove oil cooler (Fig. 3).

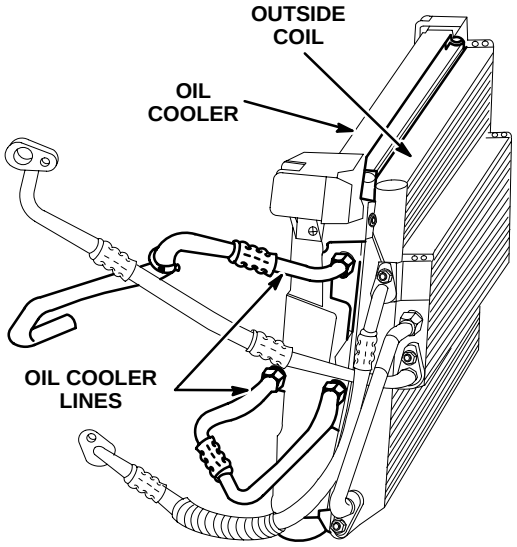

Fig. 3 Oil Cooler

INSTALLATION

(1) Install oil cooler.
(2) Install oil cooler mounting screws (4). Torque to 5.1 ± 1.1 N•m (45 ± 10 in. lbs.).
(3) Install A/C outside coil.
(4) Install A/C outside coil mounting screws (4). Torque to 5.1 ± 1.1 N•m (45 ± 10 in. lbs.).
(5) Install air seals.
(6) Install fan module into lower clips.
(7) Install upper fan module clips.
(8) Install oil cooler lines and tighten.
(9) Install A/C lines and tighten.
(10) Install cooling module.
(11) Fill turbine oil. Refer to “Oil Fill Procedure” in powertrain group 9.
(12) Connect auxiliary battery negative cable.
(13) Enable the traction battery pack by turning the high voltage service disconnect switch to On.
(14) Charge A/C System (see HVAC charging in this manual).

OIL COOLING PUMP

DESCRIPTION

The oil pump is a variable speed electric motor driven pump that attaches to the powertrain assembly. The oil pump, motor and controller are serviced as an assembly. The motor is a 1/4 hp @3600 rpm DC variable voltage electric motor. The system holds 4.5 quarts of Castrol BR MIC 881 (or equivalent) hydraulic oil.

REMOVAL

(1) Disable the traction battery pack by turning the high voltage service disconnect switch to Off.
(2) Disconnect and isolate the auxiliary battery negative cable.
(3) Raise vehicle on a hoist.
(4) Remove splash shield.
(5) Disconnect hoses from pump.
(6) Remove pressure switch connection.
(7) Disconnect high voltage connection to pump.
(8) Disconnect low voltage connection to pump.
(9) Remove oil pump (Fig. 4).

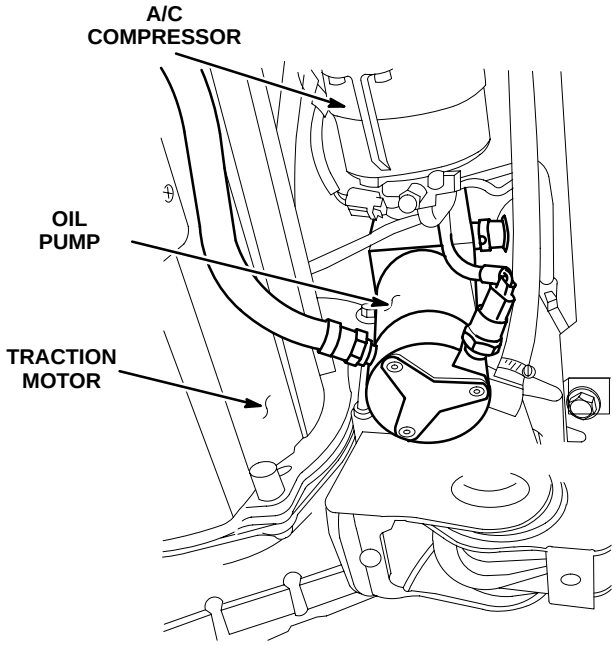

Fig. 4 Oil Pump

INSTALLATION

(1) Install oil cooling pump. Torque bolts (4) to 31 N•m (275 in. lbs.).
(2) Connect low voltage connection to pump.
(3) Connect high voltage connection to pump.
(4) Install pressure switch connection.
(5) Connect hoses to pump.
(6) Install splash shield.
(7) Lower vehicle.
(8) Check and adjust oil level.
(9) Connect the auxiliary battery negative cable.
(10) Enable the traction battery pack by turning the high voltage service disconnect switch to On.
(11) Recharge refrigerant system as described in this manual.

TORQUE SPECIFICATIONS

DESCRIPTION	TORQUE
A/C Out Door Coilb Mounting Screwsb	5.1 ± 1.1 N•m (45 ± 10 in. lbs.)
A/C Linesb	20.3 ± 3.4 N•m (180 ± 30 in. lbs.)
Compressor to Heat Exchanger Module Line Nutb	20 N•m (180 in. lbs.)
Heat Exchanger Module TXV Block Retaining Nutb	14 N•m (125 in. lbs.)
Heat Exchanger Mounting Nutsb	10 N•m (95 in. lbs.)
Oil Cooler Mounting Screwsb	5.1 ± 1.1 N•m (45 ± 10 in. lbs.)
Oil Cooling Pump Mounting Boltsb	31 N•m (275 in. lbs.)
Receiver Drier to Heat Exchanger Line Nutb	20 N•m (180 in. lbs.)

THIS PAGE INTENTIONALLY LEFT BLANK

BATTERY COOLING 7B

TABLE OF CONTENTS

PAGE

DESCRIPTION **1**
OPERATION **1**
STANDARD PROCEDURES **3**
BATTERY PACK COOLING SYSTEM FILL PROCEDURE 3
BATTERY PACK COOLING SYSTEM PRESSURE TEST PROCEDURE – INSIDE BATTERY TUB 4
COMPONENT SERVICE **5**
BATTERY PACK COOLANT INLET CROSS CAR MANIFOLD ASSEMBLY 5
BATTERY PACK COOLANT INLET FORE/AFT MANIFOLD ASSEMBLY 6
BATTERY PACK COOLANT OUTLET CROSS CAR MANIFOLD ASSEMBLY 7
BATTERY PACK COOLANT OUTLET FORE/AFT MANIFOLD ASSEMBLY 9
COOLANT PUMP 11
CRADLE INLET TUBE 12
CRADLE OUTLET TUBE 12
OUTER TUB INLET TUBE ASSEMBLY 13
OUTER TUB OUTLET TUBE ASSEMBLY 13
TORQUE SPECIFICATIONS **14**
SPECIAL TOOLS **14**

DESCRIPTION

The traction battery cooling system is designed around the coolant. The coolant must accept heat from the passages inside the battery and carry this heat out of the battery tub where the cooling module and heat exchanger can give it up to the air.

The use of battery tub manifolds, the coolant pump and other related components requires special corrosion protection. Mopar® Antifreeze or the equivalent is recommended for the best cooling without corrosion, when mixed to a freeze point of –37° C (–35°F) to –59°C (–50° F). If it loses color or becomes contaminated, drain, flush and replace with fresh properly mixed solution.

WARNING: ANTIFREEZE IS AN ETHYLENE GLYCOL BASED COOLANT AND IS HARMFUL IF SWALLOWED OR INHALED. IF SWALLOWED, DRINK TWO GLASSES OF WATER AND INDUCE VOMITING. IF INHALED, MOVE TO FRESH AIR AREA. SEEK MEDICAL ATTENTION IMMEDIATELY. DO NOT STORE IN OPEN OR UNMARKED CONTAINERS. WASH SKIN AND CLOTHING THOROUGHLY AFTER COMING IN CONTACT WITH ETHYLENE GLYCOL. KEEP OUT OF REACH OF CHILDREN. DISPOSE OF GLYCOL BASE COOLANT PROPERLY. CONTACT YOUR DEALER OR GOVERNMENT AGENCY FOR LOCATION OF COLLECTION CENTER IN YOUR AREA. AVOID COOLING MODULE FAN WHEN MOTOR COMPARTMENT RELATED SERVICE IS PERFORMED, PERSONAL INJURY CAN RESULT.

OPERATION

Coolant is used to maintain the temperatures of the following components:

- A/C compressor controller
- Auxiliary Power Converter (APC) cold plate
- Insulated Gate Bipolar Transistor (IGBT)
- Traction battery pack

Coolant is circulated through the system by the battery pack coolant pump. After the coolant exits the pump, it flows into the Powertrain Controller Assembly (PCA). Once inside the PCA, the coolant is routed through the IGBT cold plate and then through the APC cold plate. Coolant then exits the PCA and enters the A/C compressor controller. From there, coolant enters the heat exchanger where, if required, it can be cooled by the A/C refrigerant. After the heat exchanger, the coolant then enters the battery pack and passes through each of the 14 battery modules. The coolant then exits the battery pack and enters the coolant pump, where the cycle is repeated (fig. 1).

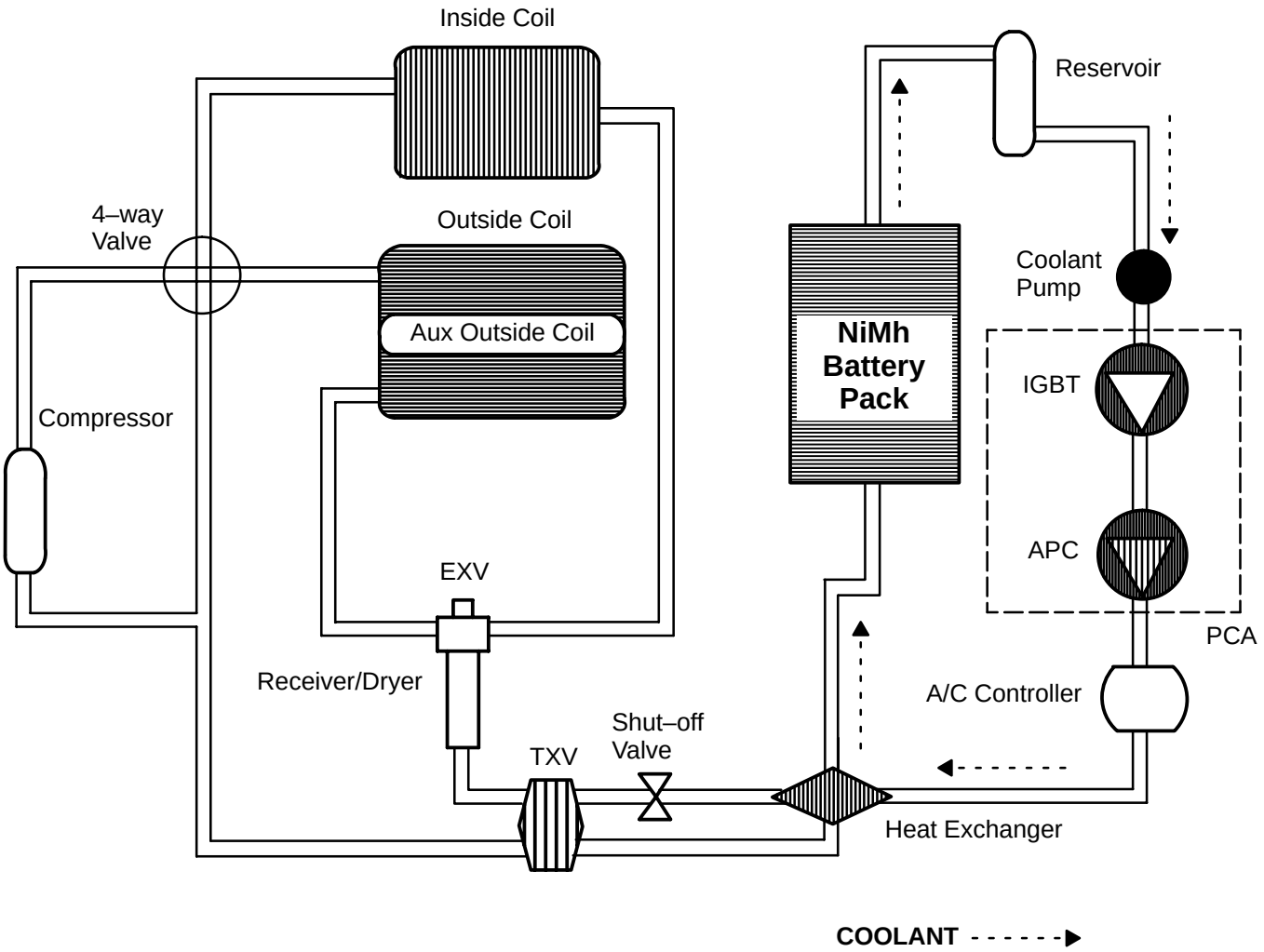

View Cool Mode Animation

View Heat Mode Animation

Fig. 1 Battery Pack Coolant System

STANDARD PROCEDURES

BATTERY PACK COOLING SYSTEM FILL PROCEDURE

To check the coolant level, make sure the vehicle has not been charged or run for at least four hours, and is on a level surface. Remove the coolant dip stick and verify the level is within the fill level indicator holes (fig. 2).

The traction battery coolant system must be filled with approximately four gallons of a 50/50 concentration of distilled water and Mopar® Antifreeze (green in color) or equivalent. The Mopar® Antifreeze must not be mixed with other (orange in color) coolants. It is recommended that the battery coolant system be pressure tested prior to filling. Refer to “Battery Pack Cooling System Pressure Test Procedure” in this section.

The following procedure is used to fill an empty battery pack coolant system.

(1) Fill the battery pack coolant reservoir to the top with a 50/50 concentration of distilled water and Mopar® Antifreeze or equivalent.

(2) Remove the bleeder valve on the A/C compressor controller. Using a wrench, support fitting attached to the controller (fig. 3).

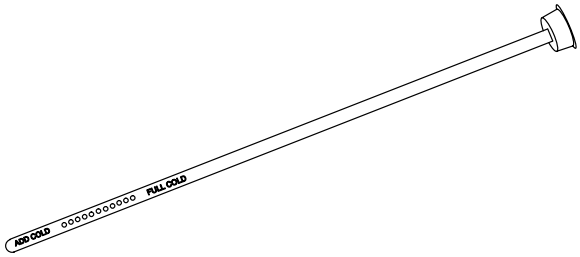

Fig. 2 Battery Coolant Dipstick

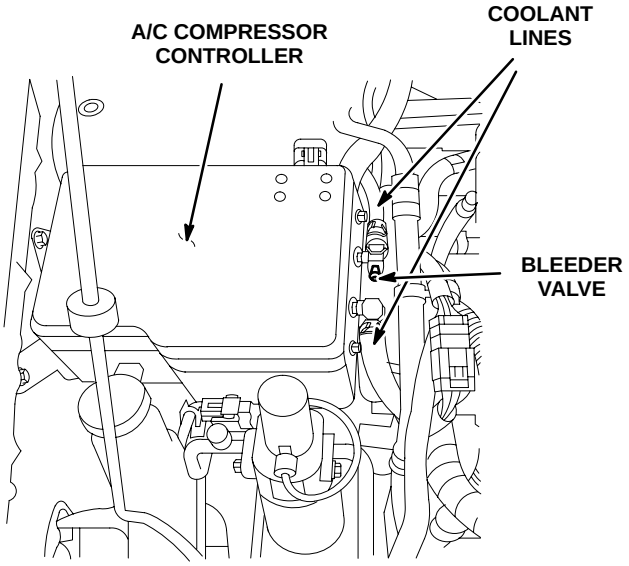

Fig. 3 A/C Compressor Controller Bleeder Valve

(3) Attach one end of 3/8 inch inside diameter hose on the A/C compressor controller bleeder fitting, and feed the other end into the battery pack coolant reservoir (fig. 4).

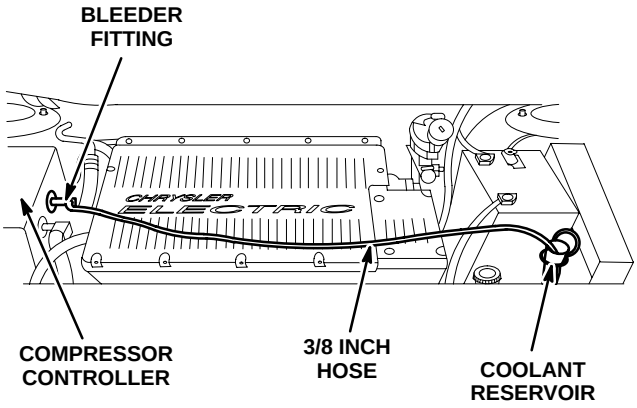

Fig. 4 3/8 Hose

(4) Place a funnel into the top of the coolant reservoir.

NOTE: The coolant system has a capacity of approximately four gallons of coolant. Be sure to have an adequate supply of coolant available when performing the following steps.

BATTERY PACK COOLING SYSTEM FILL PROCEDURE (Continued)

(5) Have an assistant start the vehicle. Pour the coolant into the reservoir as soon as the pump begins to run. If the reservoir becomes too low, the pump will stop.

(6) Stop pouring coolant into the reservoir when coolant begins to flow through the bypass hose.

(7) Stop vehicle and check the coolant level using the dipstick. Adjust the coolant level as necessary.

(8) Remove bypass hose and install A/C compressor controller bleeder valve while supporting fitting.

(9) Start the vehicle and allow the battery pack coolant pump to run (approximately five minutes) to purge air from the system.

(10) Install battery pack coolant reservoir cap and check level (fig. 5). Add coolant as necessary.

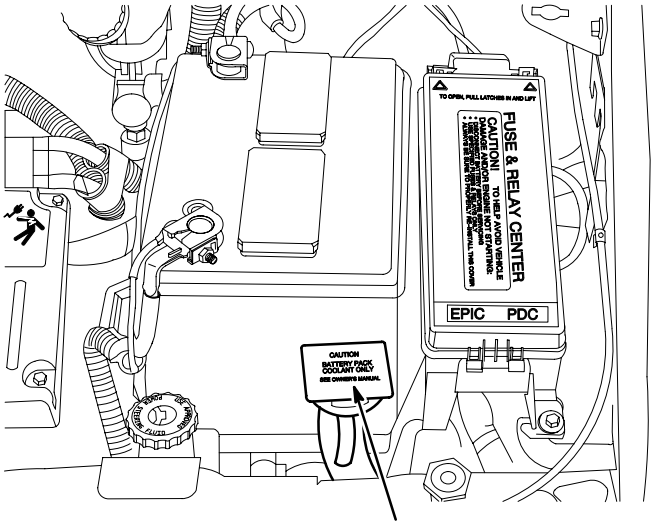

Fig. 5 Battery Pack Coolant Reservoir Cap

BATTERY PACK COOLING SYSTEM PRESSURE TEST PROCEDURE – INSIDE BATTERY TUB

The traction battery coolant system components inside the battery tub must be pressure tested prior to installing the battery pack. The following procedure covers the components that are in the traction battery pack.

(1) Connect hose/plug to either the battery pack coolant inlet or outlet tube nipple (fig 6).

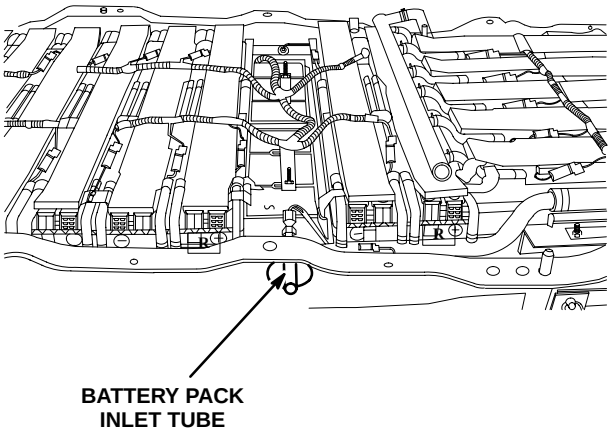

Fig. 6 Hose/Plug Connection

(2) Connect the pressure regulator assembly to the opposite nipple.

CAUTION: Pressurizing the system at greater than 5 psi may damage the traction battery cooling jackets.

(3) Connect the shop air line to the pressure regulator fitting and turn the toggle switch to the ON position.

(4) Once the system is pressurized, turn the pressure regulator assembly toggle switch to the OFF position and disconnect the shop air hose.

(5) Monitor the pressure gage for approximately five minutes. If the pressure does not drop, proceed to step 6. If the pressure does drop, proceed to step 7.

(6) Turn the toggle switch on the pressure regulator assembly to the ON position to relieve the air pressure. Disconnect pressure regulator assembly and hose/plug.

(7) Connect shop air hose to the pressure regulator assembly and turn the toggle switch to the ON position.

(8) Listen for an air leak near all of the connections in the tub. Apply air leak detection fluid if necessary to find the source of the leak.

COMPONENT SERVICE

BATTERY PACK COOLANT INLET CROSS CAR MANIFOLD ASSEMBLY

REMOVAL

(1) Disable the traction battery pack by turning the high voltage service disconnect switch to Off.
(2) Disconnect and isolate the auxiliary battery negative cable.
(3) Remove the traction battery tub from the vehicle. Refer to “Traction Battery Tub Removal” procedures in this manual.
(4) Remove battery tub cover bolts (18).
(5) Remove battery tub cover.
(6) Disconnect high voltage fuse (fig. 7).

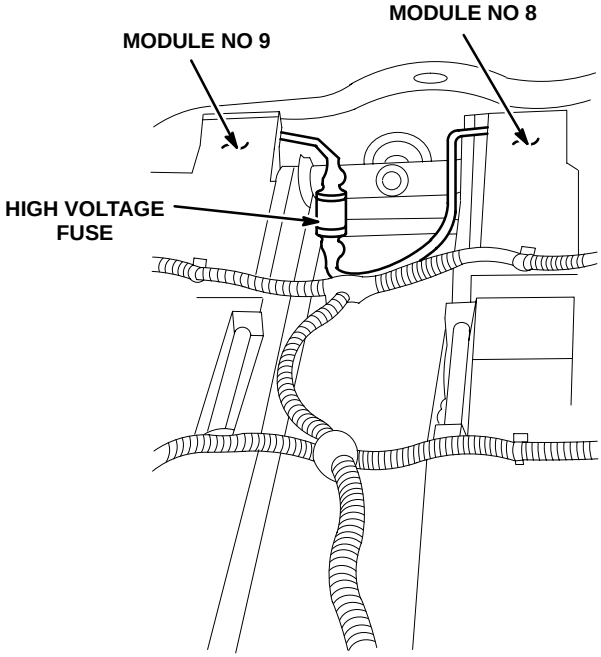

Fig. 7 High Voltage Fuse

WARNING: REMOVE BUS BARS CONNECTING BATTERY MODULES BEFORE PERFORMING ANY WORK ON THE BATTERY MANIFOLDS

(7) Remove all of the bus bars connecting the battery modules (fig. 8).

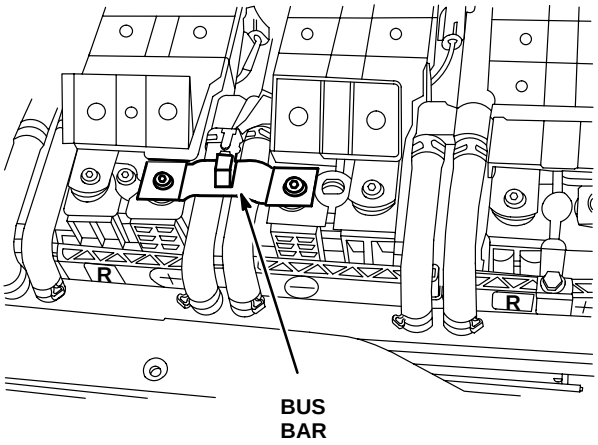

Fig. 8 Battery Bus Bar

(8) Remove hose clamps and coolant jumper tubes (10) at the manifold (Fig. 9).

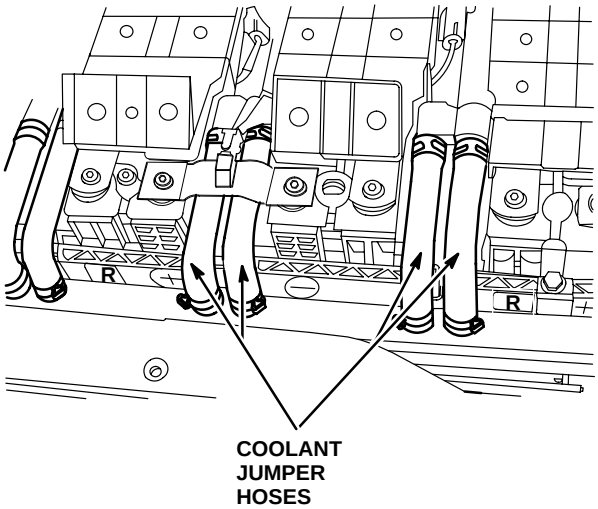

Fig. 9 Coolant Jumper Tubes

BATTERY PACK COOLANT INLET CROSS CAR MANIFOLD ASSEMBLY (Continued)

(9) Remove inlet cross car to inlet fore/aft connector hose clamp and hose at the cross car manifold (Fig. 10).

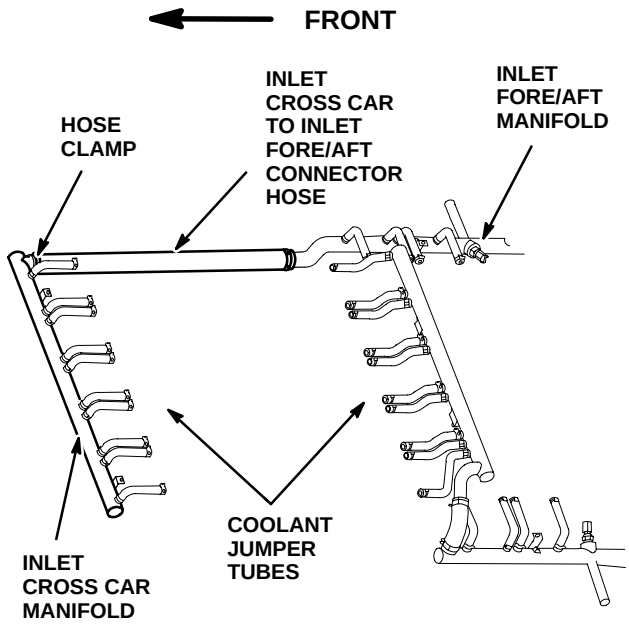

Fig. 10 Inlet Cross Car to Fore/Aft Inlet Manifold Connector Hose

(10) Remove bolts connecting manifold to battery modules (2).
(11) Remove manifold.

INSTALLATION

(1) Install manifold.
(2) Install bolts connecting manifold to battery modules (2). Torque to 10 N•m (90 in. lbs.).
(3) Install cross car to fore/aft connector hose and clamp at the cross car manifold.
(4) Install coolant jumper tubes and clamps (10) at the manifold.
(5) Install all of the bus bars connecting the battery modules. Torque to 10.5 N•m (93 in. lbs.).
(6) Connect high voltage fuse.
(7) Install tub cover and bolts. Torque to 7 N•m (68 in. lbs.).
(8) Install traction battery tub. Refer to “Traction Battery Tub Installation” procedures in this manual.
(9) Connect auxiliary battery negative cable.
(10) Enable the traction battery pack by turning the high voltage service disconnect switch to On.

BATTERY PACK COOLANT INLET FORE/AFT MANIFOLD ASSEMBLY

REMOVAL

(1) Disable the traction battery pack by turning the high voltage service disconnect switch to Off.
(2) Disconnect and isolate the auxiliary battery negative cable.
(3) Remove the traction battery tub from the vehicle. Refer to “Traction Battery Tub Removal” procedures in this manual.
(4) Remove battery tub cover bolts (18).
(5) Remove battery tub cover.
(6) Disconnect high voltage fuse (fig. 12)

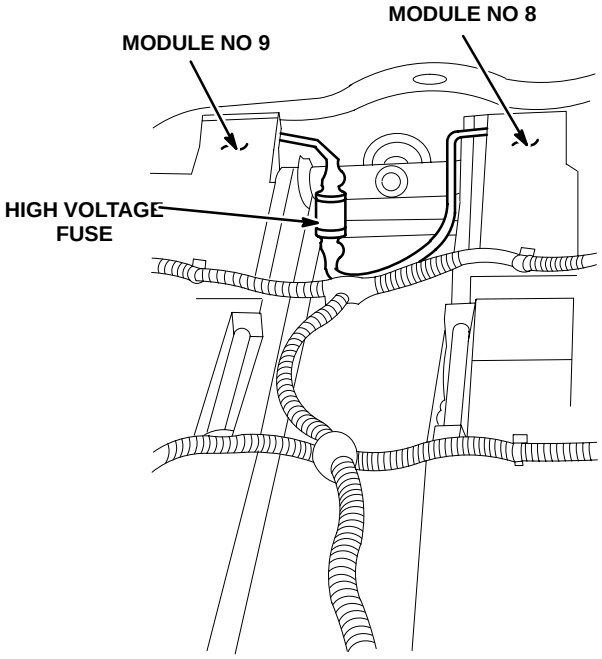

Fig. 11 High Voltage Fuse

BATTERY PACK COOLANT INLET FORE/AFT MANIFOLD ASSEMBLY (Continued)

WARNING: REMOVE BUS BARS CONNECTING BATTERY MODULE BEFORE PERFORMING ANY WORK ON THE BATTERY MANIFOLDS.

(7) Remove all of the bus bars connecting the battery modules (fig. 12).

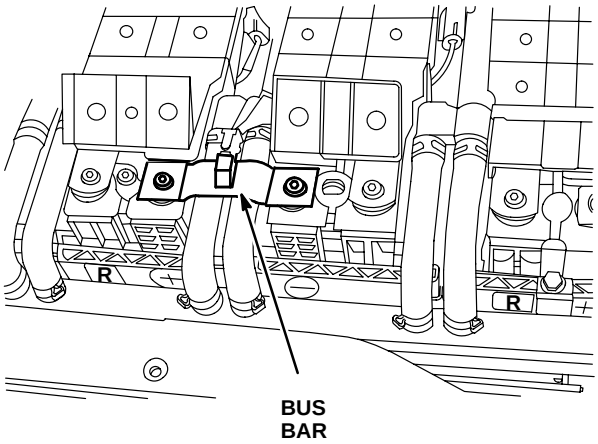

Fig. 12 Battery Bus Bar

(8) Remove hose clamps and coolant jumper tubes (20) at the manifold (Fig. 13).

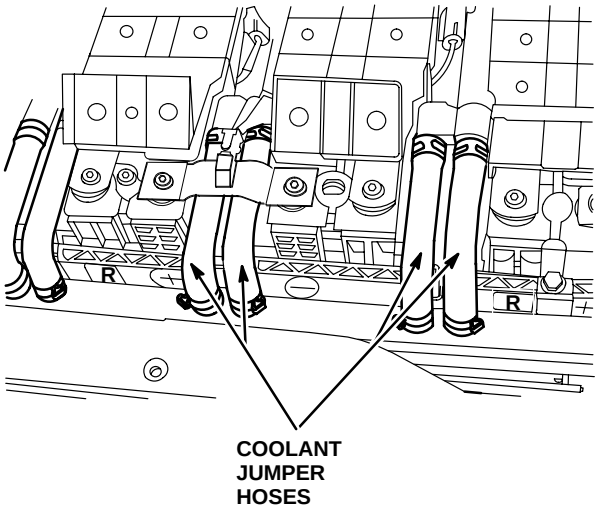

Fig. 13 Coolant Jumper Tubes

(9) Remove inlet cross car to inlet fore/aft connector hose clamp and hose at the fore/aft manifold (Fig. 14).

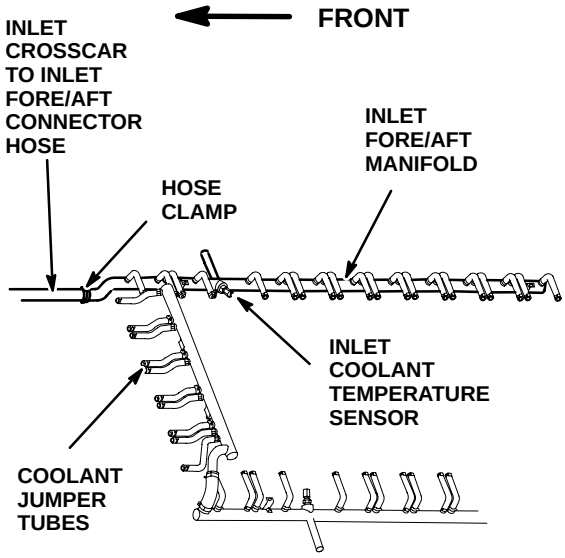

Fig. 14 Inlet Cross Car to Fore/Aft Inlet Manifold Connector Hose

(10) Remove inlet coolant temperature sensor.
(11) Remove bolts connecting manifold to battery modules (2).
(12) Remove manifold.

INSTALLATION

(1) Install manifold.
(2) Install bolts connecting manifold to battery modules (2). Torque to 10 N•m (90 in. lbs.).
(3) Install inlet coolant temperature sensor. Torque to 18 N•m (160 in. lbs.).
(4) Install cross car to fore/aft connector hose and clamp at the fore/aft manifold.
(5) Install coolant jumper tubes and clamps (20) at the manifold.
(6) Install all of the bus bars connecting the battery modules. Torque to 10.5 N•m (93 in. lbs.).
(7) Connect high voltage fuse.
(8) Install tub cover and bolts. Torque to 7 N•m (68 in. lbs.).
(9) Install the traction battery tub. Refer to “Traction Battery Tub Installation” procedures in this manual.
(10) Connect auxiliary battery negative cable.
(11) Enable the traction battery pack by turning the high voltage service disconnect switch to ON.

BATTERY PACK COOLANT OUTLET CROSS CAR MANIFOLD ASSEMBLY

REMOVAL

(1) Disable the traction battery pack by turning the high voltage service disconnect switch to OFF.

(2) Disconnect and isolate the auxiliary battery negative cable.

(3) Remove the traction battery tub from the vehicle. Refer to “Traction Battery Tub Removal” procedures in this manual.

(4) Remove battery tub cover bolts (18).

(5) Remove battery tub cover.

(6) Disconnect high voltage fuse (fig. 15).

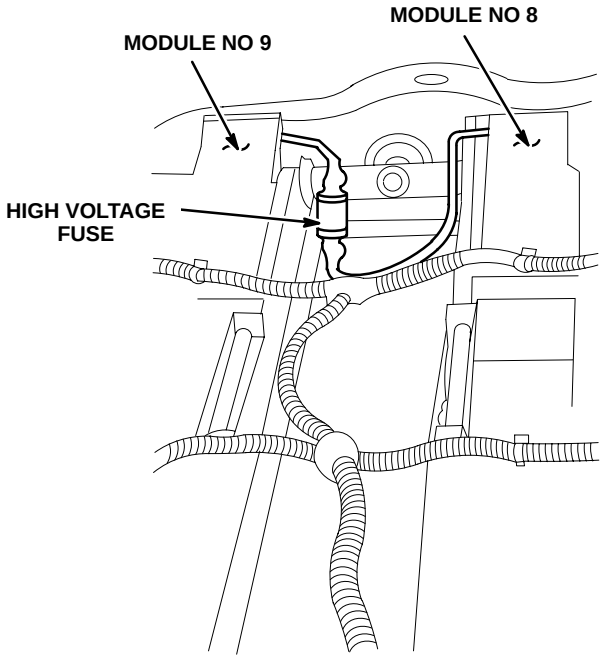

Fig. 15 High Voltage Fuse

WARNING: REMOVE BUS BARS CONNECTING BATTERY MODULE BEFORE PERFORMING ANY WORK ON THE BATTERY MANIFOLDS.

(7) Remove all of the bus bars connecting the battery modules (fig. 16).

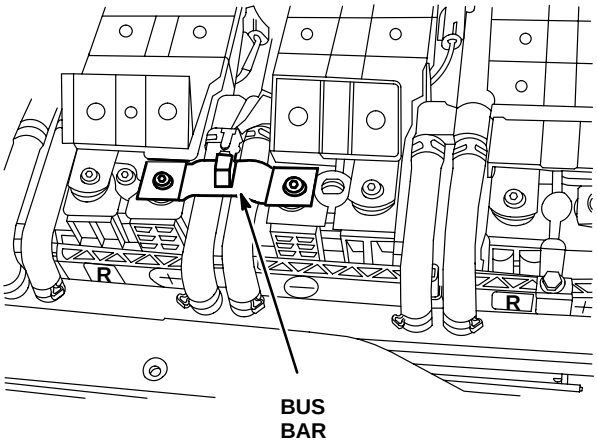

Fig. 16 Battery Bus Bar

(8) Remove hose clamps and coolant jumper tubes (10) at the manifold (Fig. 17).

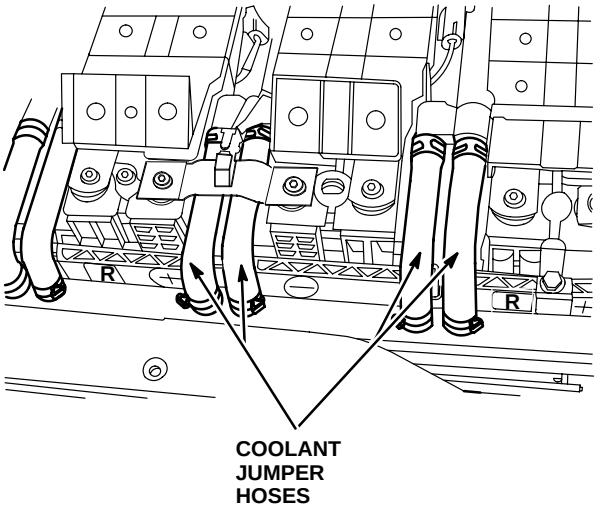

Fig. 17 Coolant Jumper Tubes

BATTERY PACK COOLANT OUTLET CROSS CAR MANIFOLD ASSEMBLY (Continued)

(9) Remove outlet cross car to outlet fore/aft connector hose clamp and hose at the cross car manifold (Fig. 18).

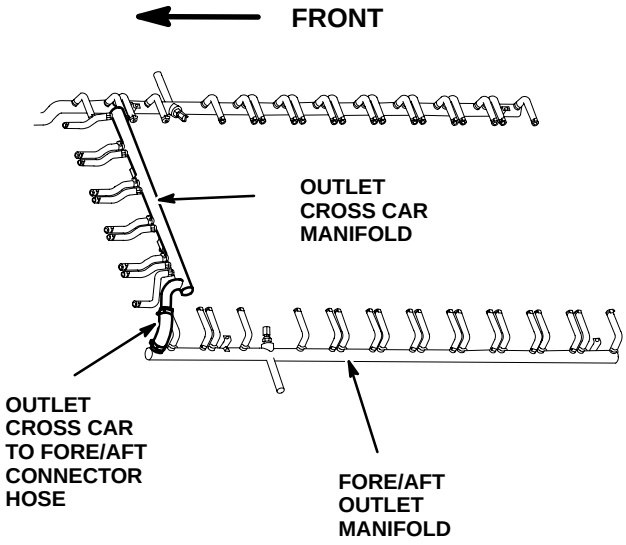

Fig. 18 Outlet Cross Car to Fore/Aft Outlet Manifold Connector Hose

(10) Remove fasteners underneath manifold connecting manifold to battery modules.
(11) Remove manifold.

INSTALLATION

(1) Install manifold.
(2) Install fasteners connecting manifold to battery modules.
(3) Install cross car to fore/aft connector hose and clamp at the cross car manifold.
(4) Install coolant jumper tubes and clamps (10) at the manifold.
(5) Install all of the bus bars connecting the battery modules. Torque to 10.5 N•m (93 in. lbs.).
(6) Connect high voltage fuse.
(7) Install tub cover and bolts. Torque to 7 N•m (68 in. lbs.).
(8) Install the traction battery tub. Refer to "Traction Battery Tub Installation" procedures in this manual.
(9) Connect auxiliary battery negative cable.
(10) Enable the traction battery pack by turning the high voltage service disconnect switch to ON.

BATTERY PACK COOLANT OUTLET FORE/ AFT MANIFOLD ASSEMBLY

REMOVAL

(1) Disable the traction battery pack by turning the high voltage service disconnect switch to OFF.
(2) Disconnect and isolate the auxiliary battery negative cable.
(3) Remove the traction battery tub from the vehicle. Refer to "Traction Battery Tub Removal" procedures in this manual.
(4) Remove battery tub cover bolts (18).
(5) Remove battery tub cover.
(6) Disconnect high voltage fuse (fig. 19).

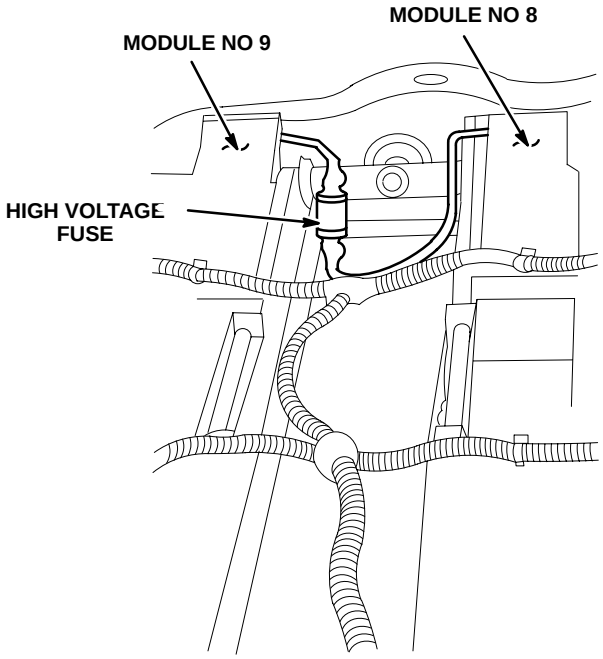

Fig. 19 High Voltage Fuse

WARNING: REMOVE ALL BUS BARS CONNECTING BATTERY MODULES BEFORE PERFORMING ANY WORK ON THE BATTERY MANIFOLDS.

BATTERY PACK COOLANT OUTLET FORE/AFT MANIFOLD ASSEMBLY (Continued)

(7) Remove all of the bus bars connecting the battery modules (fig. 20).

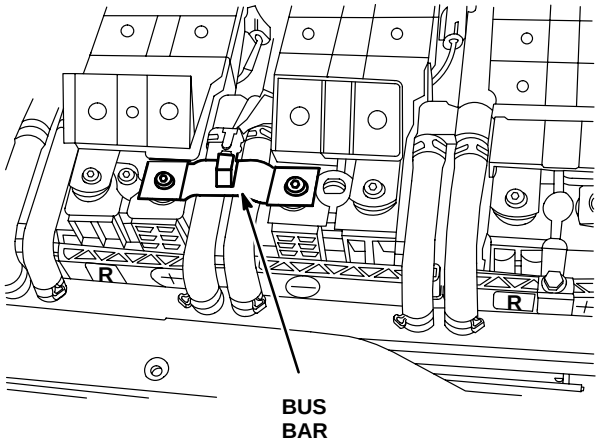

Fig. 20 Battery Bus Bar

(8) Remove hose clamps and coolant jumper tubes (20) at the manifold (Fig. 21).

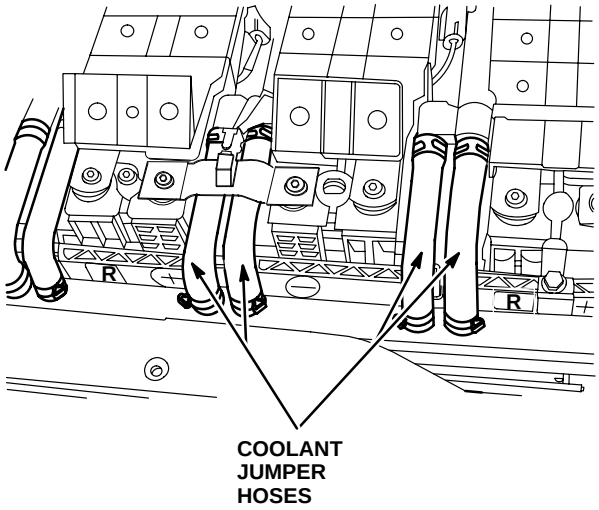

Fig. 21 Coolant Jumper Tubes

(9) Remove outlet cross car to outlet fore/aft connector hose clamp and hose at the fore/aft manifold (Fig. 22).

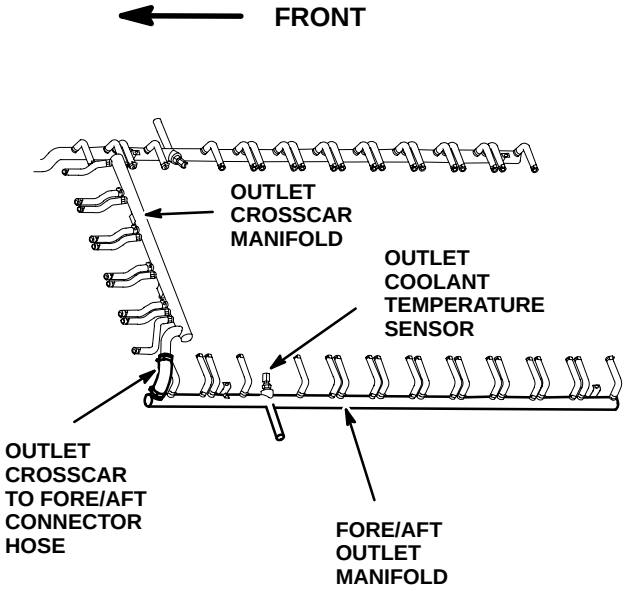

Fig. 22 Outlet Cross Car to Fore/Aft Outlet Manifold Connector Hose

(10) Remove outlet coolant temperature sensor.
(11) Remove bolts connecting manifold to battery modules (2).
(12) Remove manifold.

INSTALLATION

(1) Install manifold.
(2) Install bolts connecting manifold to battery modules (2). Torque to 10 N•m (90 in. lbs.).
(3) Install outlet coolant temperature sensor. Torque to 18 N•m (160 in. lbs.).
(4) Install cross car to fore/aft connector hose and clamp at the fore/aft manifold.
(5) Install coolant jumper tubes and clamps (20) at the manifold.
(6) Install all of the bus bars connecting the battery modules. Torque to 10.5 N•m (93 in. lbs.).
(7) Connect high voltage fuse.
(8) Install tub cover and bolts. Torque to 7 N•m (68 in. lbs.).

BATTERY PACK COOLANT OUTLET FORE/AFT MANIFOLD ASSEMBLY (Continued)

(9) Install the traction battery pack. Refer to "Traction Battery Pack Installation" procedures in this manual.
(10) Connect auxiliary battery negative cable.
(11) Enable the traction battery pack by turning the high voltage service disconnect switch to ON.

COOLANT PUMP

DESCRIPTION

The coolant pump is attached to a bracket located on the left front frame rail behind the cooling module. The battery pack coolant system is filled with a 50% ethylene glycol and a 50% distilled water mixture.

OPERATION

The function of the coolant pump is to circulate coolant through the traction battery pack, powertrain controller assembly and A/C compressor controller maintaining optimum temperatures for operation.

REMOVAL

(1) Disable the traction battery pack by turning the high voltage service disconnect switch to OFF.
(2) Disconnect and isolate the auxiliary battery negative cable.
(3) Raise vehicle on a hoist. Refer to "Lifting Procedure" in this manual.
(4) Pinch coolant hoses (2) near pump.
(5) Disconnect high voltage connectors (2) from bottom of pump (fig. 23).
(6) Disconnect coolant pressure sensor connector from top of pump.

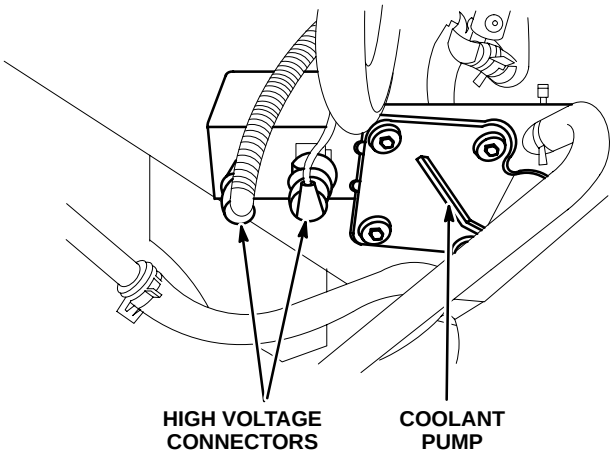

Fig. 23 Coolant Pump

(7) Remove ground strap from frame rail.
(8) Remove mounting bolts (4).
(9) Remove reservoir hose at motor.
(10) Slide motor off mounting bracket.
(11) Mark supply hose for orientation.
(12) Remove supply hose at motor.

INSTALLATION

(1) Install supply hose.
(2) Install coolant pump.
(3) Install mounting bolts. Torque to 12 N•m (105 in. lbs.).
(4) Install reservoir hose.
(5) Install ground strap.
(6) Connect oil pressure connector.
(7) Connect high voltage connectors (2).
(8) Release hose pinching tools.
(9) Lower vehicle.
(10) Connect auxiliary battery negative cable.
(11) Enable the traction battery pack by turning the high voltage service disconnect switch to On.
(12) Fill coolant and check level. Refer to "Coolant Fill Procedure" in this group.

CRADLE INLET TUBE

REMOVAL

(1) Disable the traction battery pack by turning the high voltage service disconnect switch to Off.
(2) Disconnect and isolate the auxiliary battery negative cable.
(3) Remove the traction battery pack from the vehicle. Refer to “Traction Battery Pack Removal” procedures in this manual.
(4) Pinch off hoses at both ends of cradle inlet tube (fig. 24).

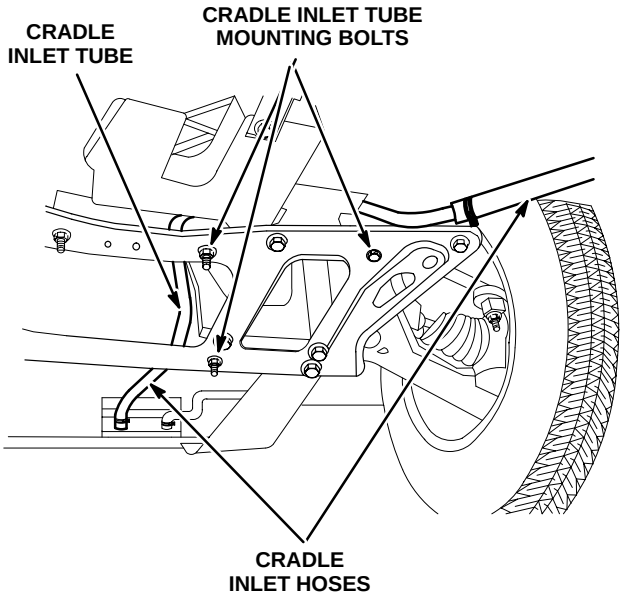

Fig. 24 Cradle Inlet Tube

(5) Remove hose clamps and hoses connected to cradle inlet tube and plug hoses.
(6) Remove bolts (3) attaching tube to cradle.
(7) Remove cradle inlet tube.

INSTALLATION

(1) Install cradle inlet tube.
(2) Install bolts (3) attaching cradle inlet tube to cradle.
(3) Connect hoses to cradle inlet tube.
(4) Install hose clamps.
(5) Connect auxiliary battery negative cable.
(6) Enable the traction battery pack by turning the high voltage service disconnect switch to On.
(7) Fill battery cooling system. Refer to ‘‘Battery Cooling System Fill Procedure” in this group.

CRADLE OUTLET TUBE

REMOVAL

(1) Disable the traction battery pack by turning the high voltage service disconnect switch to Off.
(2) Disconnect and isolate the auxiliary battery negative cable.
(3) Remove the traction battery pack from the vehicle. Refer to “Traction Battery Pack Removal” procedures in this manual.
(4) Pinch off hoses at both ends of cradle outlet tube (fig. 25).

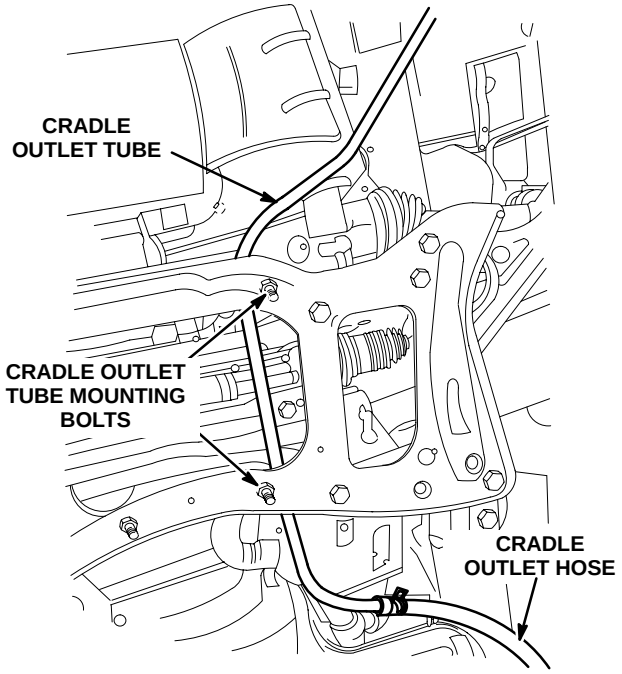

Fig. 25 Cradle Outlet Tube

(5) Remove hose clamps and hoses connected to cradle inlet tube and plug hoses.
(6) Remove bolts (2) attaching tube to cradle.
(7) Remove cradle inlet tube.

INSTALLATION

(1) Install cradle inlet tube.
(2) Install bolts (2) attaching cradle inlet tube to cradle.
(3) Connect hoses to cradle inlet tube.
(4) Install hose clamps.
(5) Connect auxiliary battery negative cable.
(6) Enable the traction battery pack by turning the high voltage service disconnect switch to ON.
(7) Fill battery cooling system. Refer to ‘‘Battery Cooling System Fill Procedure” in this group.

OUTER TUB INLET TUBE ASSEMBLY

REMOVAL

(1) Disable the traction battery pack by turning the high voltage service disconnect switch to OFF.
(2) Disconnect and isolate the auxiliary battery negative cable.
(3) Remove the traction battery pack from the vehicle. Refer to “Traction Battery Pack Removal” procedures in this manual.
(4) Pinch off hoses at both ends of outer tub inlet tube (fig. 26).
(5) Remove hose clamps and hoses connected to outer tub inlet tube and plug hoses.
(6) Remove bolts (2) attaching tube to body.
(7) Remove outer tub inlet tube.

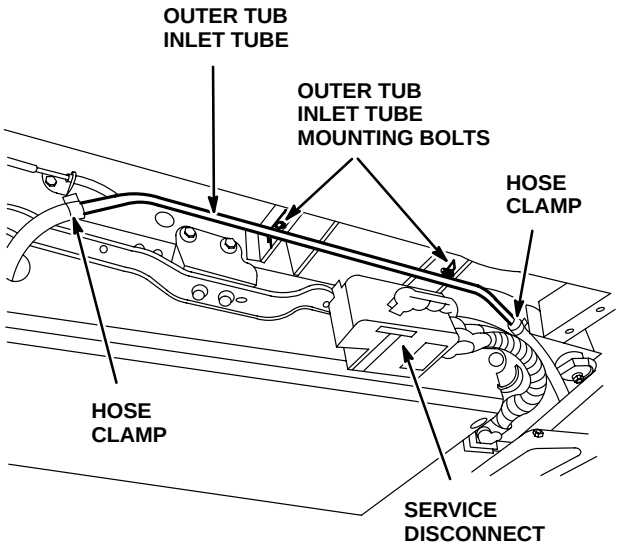

Fig. 26 Outer Tub Inlet Tube

INSTALLATION

(1) Install outer tub inlet tube.
(2) Install bolts (2) attaching outer tub inlet tube to body.
(3) Connect hoses to outer tub inlet tube.
(4) Install hose clamps.
(5) Connect auxiliary battery negative cable.
(6) Enable the traction battery pack by turning the high voltage service disconnect switch to ON.
(7) Fill battery cooling system. Refer to ‘‘Battery Cooling System Fill Procedure” in this group.

OUTER TUB OUTLET TUBE ASSEMBLY

REMOVAL

(1) Disable the traction battery pack by turning the high voltage service disconnect switch to OFF.
(2) Disconnect and isolate the auxiliary battery negative cable.
(3) Remove the traction battery pack from the vehicle. Refer to “Traction Battery Pack Removal” procedures in this manual.
(4) Pinch off hoses at both ends of outer tub outlet tube (fig. 27).
(5) Remove hose clamps and hoses connected to outer tub outlet tube and plug hoses.
(6) Remove bolts (2) attaching tube to body.
(7) Remove outer tub outlet tube.

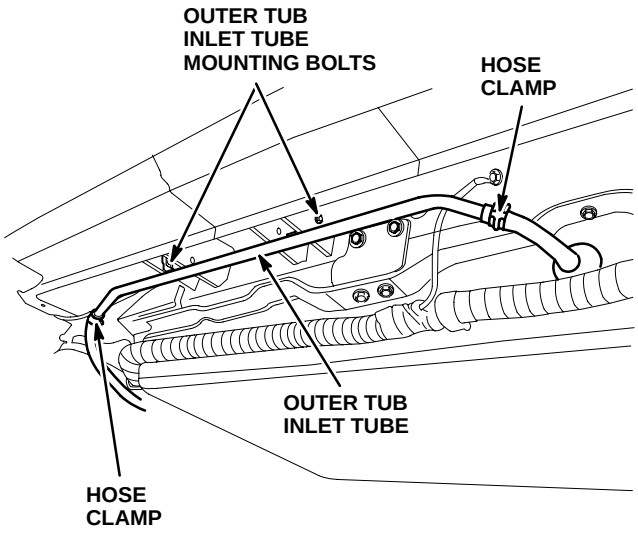

Fig. 27 Outer Tub Outlet Tube

INSTALLATION

(1) Install outer tub outlet tube.
(2) Install bolts (2) attaching outer tub outlet tube to body.
(3) Connect hoses to outer tub outlet tube.
(4) Install hose clamps.
(5) Connect auxiliary battery negative cable.
(6) Enable the traction battery pack by turning the high voltage service disconnect switch to ON.
(7) Fill battery cooling system. Refer to ‘‘Battery Cooling System Fill Procedure” in this group.

TORQUE SPECIFICATIONS

DESCRIPTION	TORQUE
Coolant Pump Mounting Bolts	12 N•m (105 in. lbs.)
Coolant Manifold Mounting Bolts	10 N•m (90 in. lbs.)

SPECIAL TOOLS

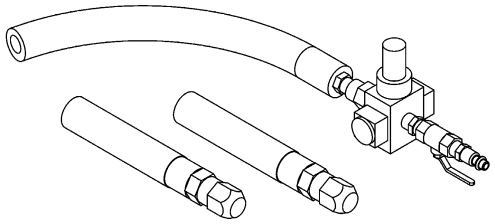

Coolant Purge Tool

TRACTION MOTOR

TABLE OF CONTENTS

PAGE

POWERTRAIN CONTROLLER ASSEMBLY (PCA) 9A

PAGE

TRACTION MOTOR 9B

THIS PAGE INTENTIONALLY LEFT BLANK

POWERTRAIN CONTROLLER ASSEMBLY (PCA) 9A

TABLE OF CONTENTS

PAGE

DESCRIPTION 2
OPERATION 2
VEHICLE START UP 3
VEHICLE SHUT DOWN 4

DIAGNOSIS AND TESTING 5
DIAGNOSTIC TESTS 5
NO START CONDITION 103
NO CHARGE CONDITION 104

COMPONENT SERVICE 105
ACCELERATOR PEDAL 105
AUXILIARY POWER CONVERTER (APC) COLD PLATE 105
AUXILIARY POWER CONVERTER (APC) FILTER STAGE ASSEMBLY 106
AUXILIARY POWER CONVERTER (APC) POWER STAGE ASSEMBLY 108
CHASSIS VECTOR CONTROLLER (CVC) CIRCUIT BOARD 109
CURRENT SENSOR 110
FILTER ASSEMBLY 111
GATE DRIVE CIRCUIT BOARD 112

PAGE

HIGH VOLTAGE EMI LINE FILTERS 113
HIGH VOLTAGE FUSES 114
INSULATED GATE BIPOLAR TRANSISTOR (IGBT) 114
INSULATED GATE BIPOLAR TRANSISTOR (IGBT) COLD PLATE 116
INSULATED GATE BIPOLAR TRANSISTOR (IGBT) SNUBBER CAPACITORS 117
L1 INDUCTOR 118
LOW VOLTAGE POWER SUPPLY/ AUXILIARY POWER CONVERTER (LVPS/APC) CIRCUIT BOARD 119
POWER DISTRIBUTION BOX (PDB) 120
POWERTRAIN CONTROLLER ASSEMBLY (PCA) 121
POWERTRAIN CONTROLLER ASSEMBLY (PCA) COOLING FAN 123
POWERTRAIN CONTROLLER ASSEMBLY (PCA) MOTHER BOARD 124
RELAY DRIVE ASSEMBLY 126
TORQUE SPECIFICATIONS 129

DESCRIPTION

The information contained in this section covers the Powertrain Controller Assembly (PCA) and the PCA components. The PCA performs many of the same functions as the Powertrain Control Module (PCM) found in the gasoline version.

OPERATION

High voltage from the traction battery pack enters the Battery Interface Center (BIC), where the safety relays isolate the high voltage from the rest of the vehicle. When the safety relays close, current from the battery pack enters the PCA through the C1 connector and travels to the PCA relay drive assembly, the Auxiliary Power Converter (APC) assembly, and the Power Distribution Box (PDB).

The relay drive assembly contains (among other components) precharge resistors and the PCA main relay. Before the PCA main relay can close, the low (downstream) side of the relay must be precharged to a voltage similar to that of the battery pack to avoid a damaging high voltage arc within the main relay. When the main relay is closed, current is routed in two directions. The first direction is to the Power Distribution Box, which supplies high voltage to several vehicle components.

The second direction is through the big blue capacitor and L1 inductor assemblies and then to the Insulated Gate Bipolar Transistors (IGBT's). The IGBT's are used to convert the DC power from the battery pack to three–phase AC that is used to power the traction motor. The big blue capacitor and L1 inductor assemblies filter out switching noise from the IGBT's.

The APC converts the high voltage from the battery pack to low voltage that is used by the internal PCA circuit boards as well as other vehicle accessories. Because the APC is upstream of the PCA main relay, the APC can function when the PCA main relay is open (vehicle OFF).

The Power Distribution Box contains high voltage fuses for most of the high voltage components in the vehicle. Because the Power Distribution Box receives high voltage both before and after the PCA main relay, some components can receive high voltage with the PCA main relay open. The following chart illustrates which components are upstream and downstream of the PCA main relay:

PDB FUSED COMPONENT	UPSTREAM/ DOWNSTREAM OF PCA MAIN RELAY
Power Steering Pump	Downstream
Oil Pump	Downstream
PTC Heater	Upstream
Battery Pack Coolant Pump	Upstream
A/C Compressor Controller	Upstream

The flow charts on the following pages show the order of operation the vehicle modules perform during vehicle start up and shut down.

VEHICLE START UP

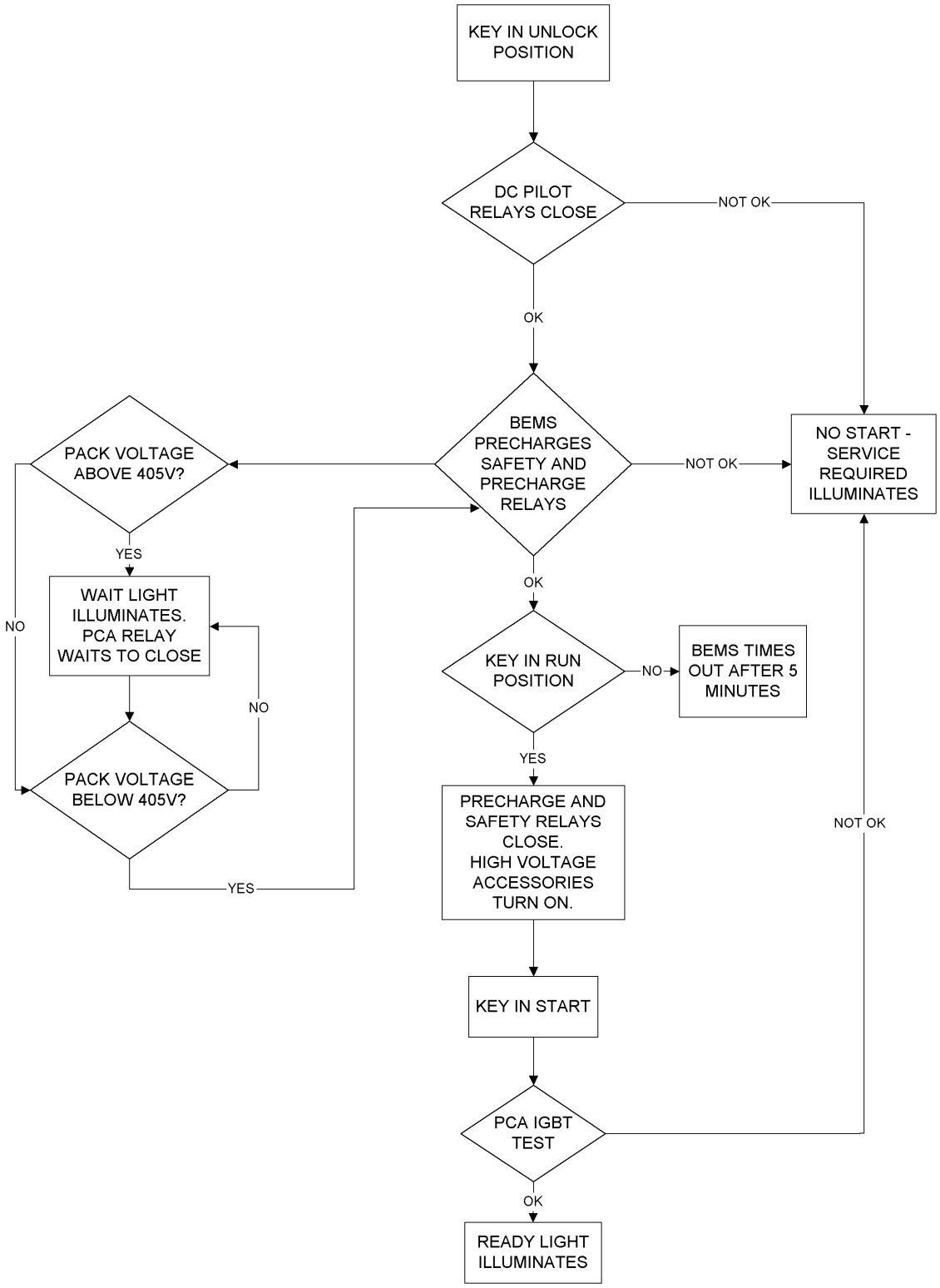

VEHICLE SHUT DOWN

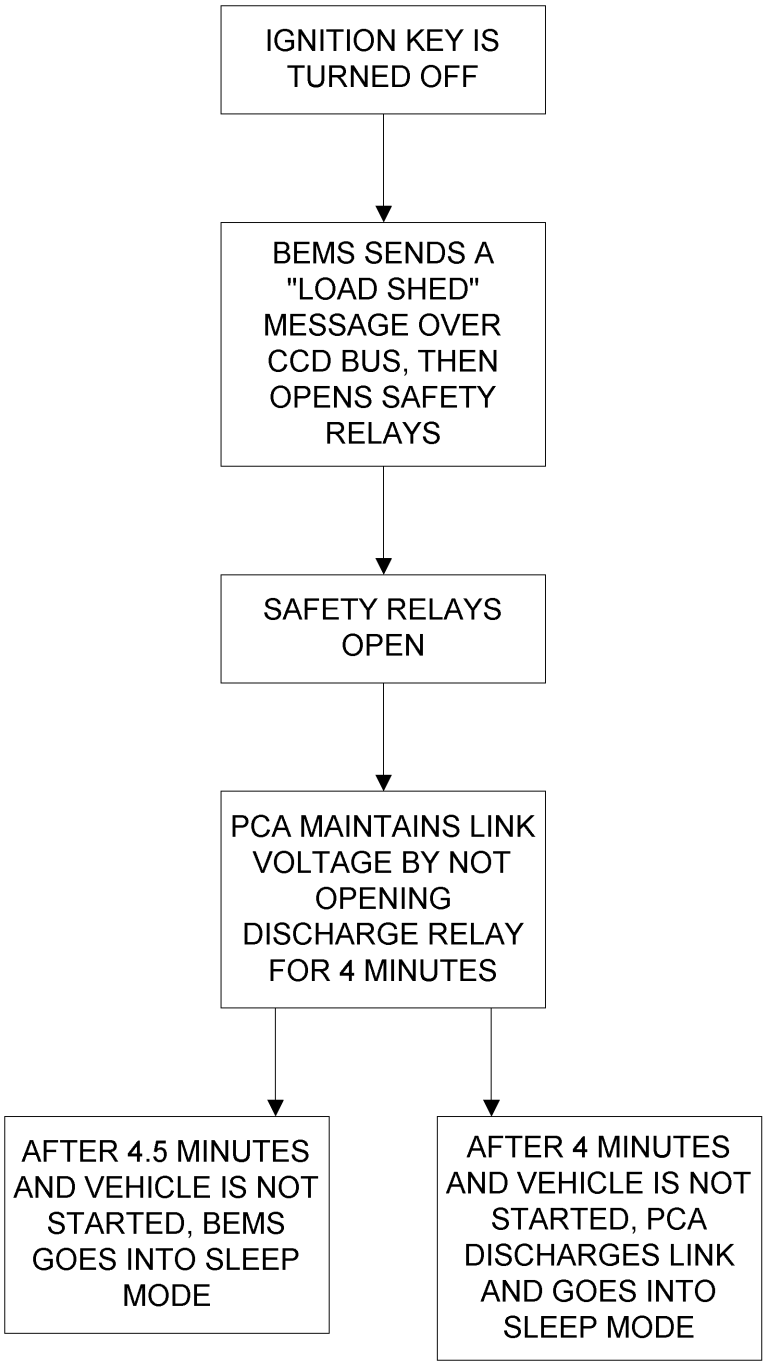

DIAGNOSIS AND TESTING

DIAGNOSTIC TESTS

DIAGNOSTIC PROCEDURE	TEST
PRE–DIAGNOSTIC CHECKOUT	TEST 1
ABS REGEN FAULT ($1B)	TEST 2
ACCELERATOR TOLERANCE FAULT ($43)	TESTS 37 & 38
AMBIENT TEMPERATURE OUT OF RANGE ($30)	BEMS TEST(INCOMPLETE)
AUTO SAFETY SHUTDOWN ($52)	TEST 1
AUXILIARY BATTERY TEMP/VOLT ($37)	TEST 19
BRAKE SENSOR–1 & 2 FAULT ($46)	TESTS 4 & 5
BRAKE SENSOR–1 FAULT ($44)	TEST 4
BRAKE SENSOR–2 FAULT ($45)	TEST 5
BRAKE TOLERANCE FAULT ($47)	TESTS 4 & 5
CAPACITOR PRECHARGE TEST FAILURE ($02)	TEST 6
CHARGE PLUG FAULT ($27)	TEST 1
COLD PLATE TEMPERATURE OUT OF RANGE ($0F)	TEST 7
CURRENT SENSOR TEST ($13)	TEST 9
CVC FAILURE	REPLACE CVC BOARD*
DISCHARGE FAULT ($07)	TEST 10
DISCHARGE INTERRUPT ($1F)	TEST 11
DISCHARGE SIGNAL FAULT ($1C)	TEST 12
GATE DRIVE DISABLE FAULT ($26)	REPLACE GATE DRIVE BOARD*
HIGH TEMPERATURE ($18)	TEST 13
HIGH VOLTAGE INPUT FAULT ($15)	TEST 14
IGBT TEST FAILED ($05)	TEST 15
IGNITION LATCH FAULT ($54)	CALL EPIC HOT LINE*
LAMP DRIVER FAULT	TEST 16
LINK FAULT ($06)	TEST 17
LINK–VOLTS OUT OF RANGE ($23)	TEST 18
LOW AUXILIARY BATTERY ($20)	TEST 19
MAIN RELAY FAILURE	TEST 20
MAX OVERCURRENT ($22)	TEST 21
NEGATIVE 15V FAULT ($34)	TEST 22
NO CCD MESSAGE BEMS ($4C)	BEMS TEST 1
NO CCD MESSAGE HVAC ($4E)	HVAC TEST 1

* Perform Test 1. If DTC is still present, perform indicated action.

DIAGNOSTIC PROCEDURE	TEST
NO CCD MESSAGE POWER STEERING ($4D)	POWER STEERING TEST 1
NO RESPONSE FROM PCA	TEST 23
NO RESPONSE OVER CCD BUS FROM PCA	TEST 24
OIL PRESSURE FAULT ($1E)	TEST 25
OIL PUMP PWM FAILURE ($11)	TEST 26
OIL SWITCH FAULT (STUCK CLOSED) ($50)	TEST 27
OVER CURRENT ($19)	TEST 28
PCA PILOT FAULT ($24)	TEST 29
PILOT DROPOUT FAULT ($25)	TEST 30 (INCOMPLETE)
POSITIVE 15V FAULT ($33)	TEST 31
POWER BRIDGE PWM TEST FAULT ($12)	TEST 32
PRECHARGE RELAY FAILURE ($03)	TEST 33
PRND FAULT ($1A)	TEST 34
R/D LOSS FAULT ($14)	TEST 35
RESOLVER COUNT FAILURE	REPLACE CVC BOARD*
SAFETY RELAY OPEN FAULT ($17)	TEST 24
SERVICE REQUIRED BEMS™ ($48)	BEMS TEST 1
SERVICE REQUIRED HVAC ($4A)	HVAC TEST 1
SERVICE REQUIRED PCA ($4B)	TEST 1
SERVICE REQUIRED POWER STEERING ($49)	POWER STEERING TEST 1
STUCK RELAY FAULT ($36)	TEST 36
STUCK THROTTLE ($53)	REPLACE ACCELERATOR PEDAL ASSEMBLY*
THROTTLE POSITION SENSOR–1 & 2 FAULT ($42)	TESTS 37 & 38
THROTTLE POSITION SENSOR–1 FAULT ($40)	TEST 37
THROTTLE POSITION SENSOR–2 FAULT ($41)	TEST 38
THROTTLE STUCK HIGH	TESTS 37 & 38
TRACTION BATTERY VOLTAGE OUT OF RANGE ($01)	TEST 39
TRACTION MOTOR TEMPERATURE OUT OF RANGE	TEST 40
VERIFICATION TEST	TEST VER 1A

* Perform Test 1. If DTC is still present, perform indicated action.

TEST 1 – PRE–DIAGNOSTIC CHECKOUT

NOTE: Ensure that the Auxiliary Battery is properly charged to perform diagnostics.

1. Connect the Scan Tool to the Data Link Connector (DLC).

2. With the Scan Tool, read and record all trouble codes from BEMS™, PCA, HVAC and Power Steering. If a “No Response” from a system is present on the scan tool, refer to the Diagnosis and Testing module in the appropriate section of this service manual.

3. With the Scan Tool, erase all trouble codes.

4. Road test vehicle or charge vehicle depending on complaint condition.

5. After road test or charge, read all trouble codes using the Scan Tool.
   a. If no trouble codes have been set, return vehicle to customer.
   . b. If there are multiple modules requesting the service required lamp, perform diagnosis on trouble codes by module in the following order:
      i. BEMS™
      ii. PCA
      iii. HVAC
      iv. Power Steering

6. If the vehicle does not start or does not charge, refer to the “No Start Condition” or “No Charge Condition” tests at the end of this section.

7. The following codes, if set alone, indicate that a certain condition has occurred and does not indicate a PCA fault condition. Perform the action described.

DESCRIPTION	POSSIBLE CAUSE
CHARGE PLUG FAULT	VERIFY CHARGE PORT DOOR IS CLOSED AND SWITCH IS OPERATING PROPERLY.
AUTO SAFETY SHUTDOWN	THIS CODE IS SET WHEN THE CVC ISSUES A SAFETY RELAY OPEN REQUEST TO THE BEMS. WHEN THE KEY HAS BEEN TURNED TO ON FOR FOUR MINUTES, BUT NOT TO THE START POSITION, THE BEMS OPENS THE SAFETY RELAY WHICH CAUSES THIS DTC TO SET. CYCLE KEY TO OFF AND ATTEMPT TO START VEHICLE.

NOTE: If the Scan Tool screen is blank, perform the following:

I. Disconnect the scan tool from the data link connector (DLC).

II. Ensure that there is a good ground circuit at DLC cavity 4.

III. Ensure that there is a 12–volt supply at cavity 16. If there is not, inspect the IOD fuse in the PDC.

IV. Try a different scan tool cable.

V. Try a different scan tool.

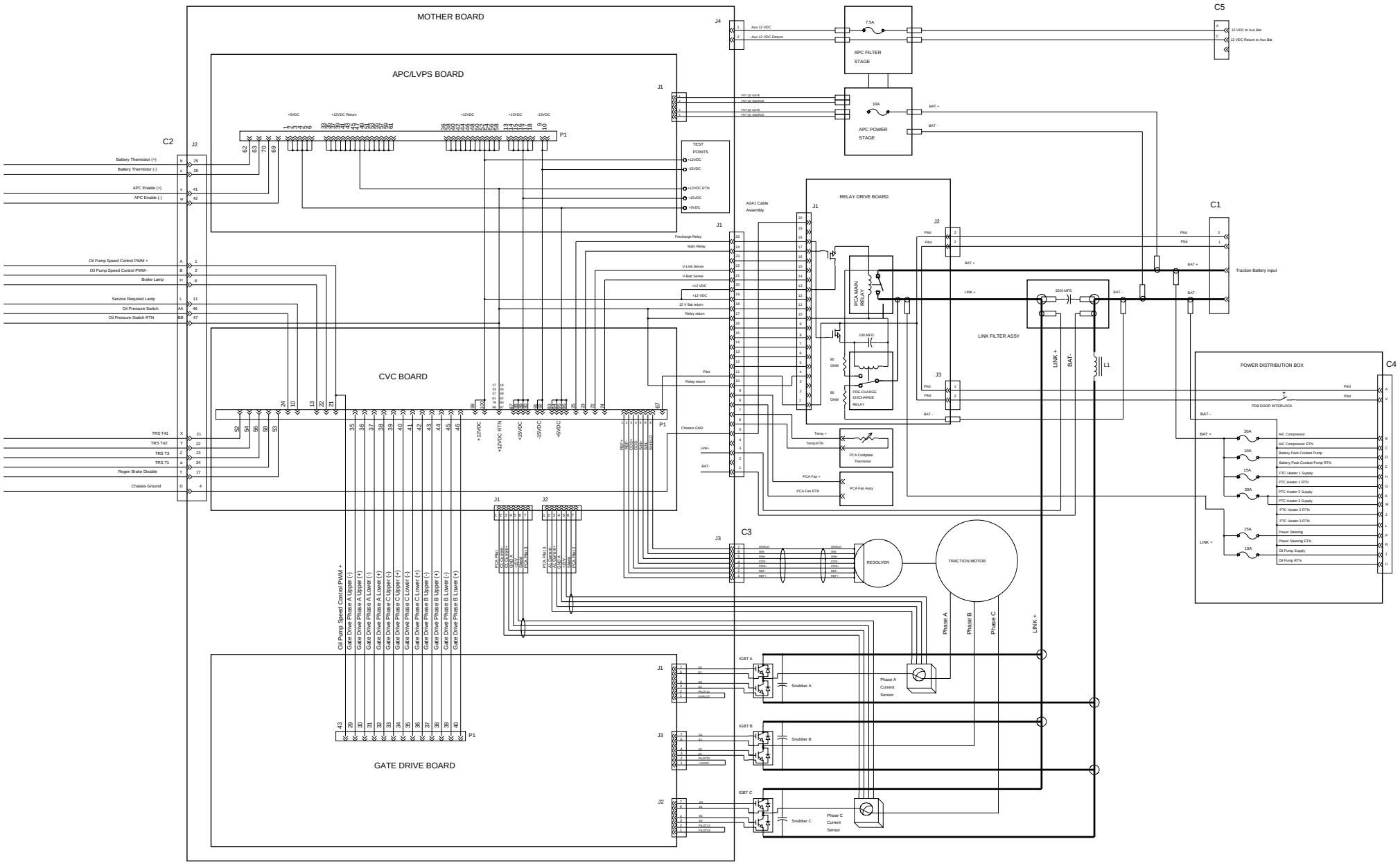
MOTHER BOARD
APC/LVPS BOARD
CVC BOARD
GATE DRIVE BOARD
RELAY DRIVE BOARD
APC FILTER STAGE
APC POWER STAGE
TEST POINTS
A2A1 Cable Assembly
PCA MAIN RELAY
PRE-CHARGE DISCHARGE RELAY
LINK FILTER ASSY
POWER DISTRIBUTION BOX
PDB DOOR INTERLOCK
PCA Coldplate Thermistor
PCA Fan Assy
RESOLVER
TRACTION MOTOR
Phase A Current Sensor
Phase C Current Sensor
Traction Battery Input
C1
C2
C3
C4
C5
J1
J2
J3
J4
P1
Battery Thermistor (+)
Battery Thermistor (-)
APC Enable (+)
APC Enable (-)
Oil Pump Speed Control PWM +
Oil Pump Speed Control PWM -
Brake Lamp
Service Required Lamp
Oil Pressure Switch
Oil Pressure Switch RTN
TRS T41
TRS T42
TRS T3
TRS T1
Regen Brake Disable
Chassis Ground
Aux 12 VDC
Aux 12 VDC Return
12 VDC to Aux Bat
12 VDC Return to Aux Bat
BAT +
BAT -
LINK +
LINK -
Phase A
Phase B
Phase C
IGBT A
IGBT B
IGBT C
Snubber A
Snubber B
Snubber C
A/C Compressor
A/C Compressor RTN
Battery Pack Coolant Pump
Battery Pack Coolant Pump RTN
PTC Heater 1 Supply
PTC Heater 1 RTN
PTC Heater 2 Supply
PTC Heater 3 Supply
PTC Heater 2 RTN
PTC Heater 3 RTN
Power Steering
Power Steering RTN
Oil Pump Supply
Oil Pump RTN

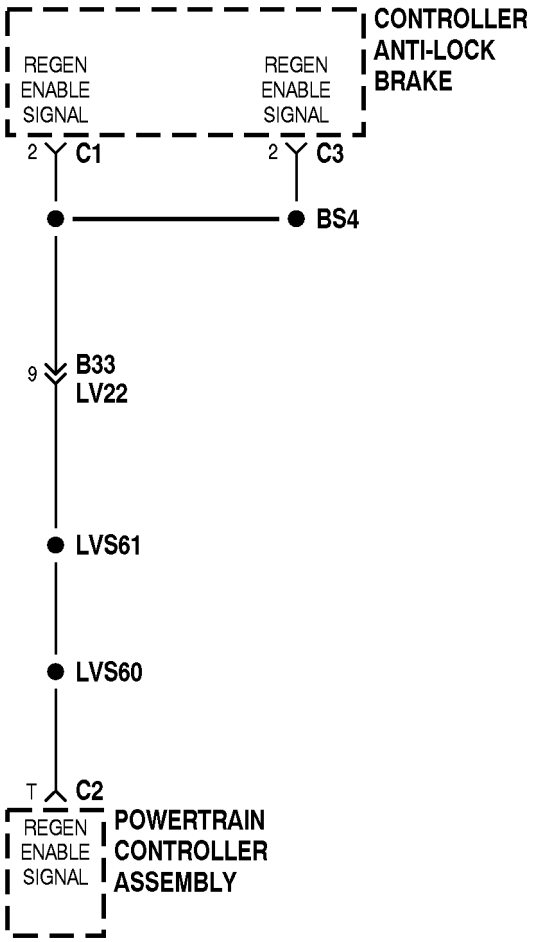

TEST 2 – ABS REGEN FAULT ($1B)

Description: The Controller Anti–lock Brake (CAB) activates the disable regen line once at ± 12 MPH to indicate that the system is working. Normally this signal is enabled to allow regenerative braking by the powertrain. This condition will disable regenerative braking for that driving session.

WARNING LAMP: THE BRAKE LAMP WILL BE ILLUMINATED.

Detection: When the ignition key is in the RUN position. This DTC sets when the vehicle has accelerated to greater than ± 30 MPH after initial key–on and the CVC has not received the disable regenerative braking pulse from the CAB, or when the first disable regen pulse was received but vehicle speed was not less than ± 30 MPH.

Related Symptoms: The regenerative braking system is disabled and the BRAKE lamp is illuminated

Possible Causes: The following are possible causes for the ABS REGEN FAULT:

- The Controller Anti–lock Brake is faulty
- CVC failure
- Interconnection failure

TEST 2 – ABS REGENERATIVE BRAKE FAILURE ($1B)

STEP	ACTION	YES	NO
1	HAS TEST 1 BEEN COMPLETED?	GO TO STEP 2.	PERFORM TEST 1.
2	HAVE ANY OTHER ABS DTC'S BEEN DECLARED?	REPAIR OTHER CODES FIRST.*	GO TO STEP 3.
3	DISCONNECT CAB C1 AND C3 CONNECTORS.** OPEN THE PCA AND REPLACE THE CVC BOARD WITH THE CVC I/O PROBING TOOL. PROBE FROM CONTROLLER ANTI–LOCK BRAKE C1 PIN 2 AND C3 PIN 2 TO CVC PIN 53 FOR CONTINUITY OR SHORT TO GROUND. **CONTROLLER ANTI–LOCK BRAKE -C1** CAV: 2 / COLOR: RD / FUNCTION: REGEN ENABLE SIGNAL 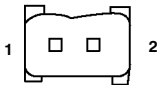 **CONTROLLER ANTI–LOCK BRAKE -C3** CAV: 2 / COLOR: RD / FUNCTION: REGEN ENABLE SIGNAL 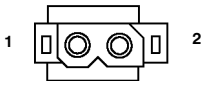 IS AN OPEN OR SHORT DETECTED?	GO TO STEP 4.	REPLACE THE CVC BOARD. *
4	DISCONNECT PCA C2 CONNECTOR.** DISCONNECT PCA C2 CONNECTOR AND PROBE FOR CONTINUITY OR SHORT TO GROUND FROM PCA C2–PIN T TO CONTROLLER ANTI–LOCK BRAKE C1 PIN 2 AND C3 PIN 2. **POWERTRAIN CONTROLLER ASSEMBLY -C2** CAV: T / COLOR: DB / FUNCTION: REGEN ENABLE SIGNAL 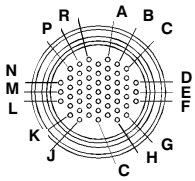 IS AN OPEN OR SHORT TO GROUND DETECTED?	REPAIR THE CIRCUIT BETWEEN THE PCA AND CAB.*	REPLACE THE PCA MOTHER BOARD.*

***Perform Verification TEST VER-1A. **Check connectors - Clean/repair as necessary.**

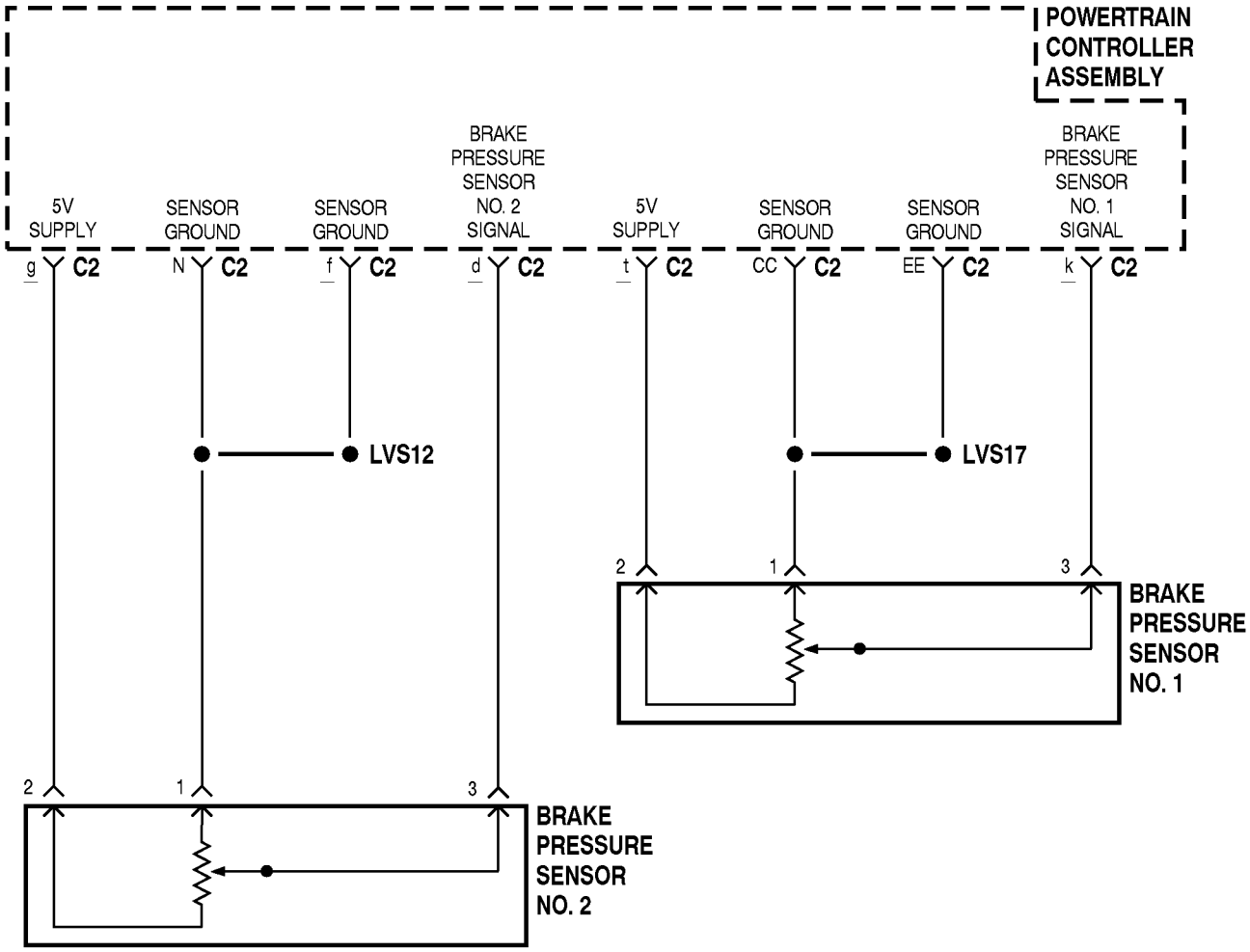

TEST 4 – BRAKE SENSOR–1 FAULT ($44), ($46), ($47)

Description: The brake pressure sensor provides a voltage that indicates the line pressure. The PCA senses that voltage and uses it to determine the amount of regen torque to be commanded to the motor. The PCA always uses the greater of the two input values. Nominally, the voltage equals 0.5V for no line pressure and 4.5V for 500 PSI of line pressure. If the brake pressure sensor #1 is out of range, the brake pressure sensor #2 is used and this fault is set.

WARNING LAMP: THE "BRAKE" LAMP WILL BE ILLUMINATED.

Detection: When the ignition key is in the RUN position. If the brake pressure sensor #1 input value is not within the range of 0.2V to 4.8V, this code is set.

Related Codes: Brake Sensor – 2 Fault, Brake Sensor 1 & 2 Fault, Brake Tolerance Fault. The Brake Tolerance Fault is set when the difference between the brake pressure sensors is greater than 0.49V.

Possible Causes: The following are possible causes for the BRAKE SENSOR–1 FAULT:

- Sensor failure
- Faulty sensor interface circuitry

TEST 4 – BRAKE SENSOR–1 FAULT ($44), ($46), ($47)

STEP	ACTION	YES	NO
1	HAS TEST 1 BEEN COMPLETED? **NOTE: REFER TO THE PCA–INTERNAL FOLD–OUT SCHEMATIC FOR THE FOLLOWING PROCEDURE.**	GO TO STEP 2.	PERFORM TEST 1.
2	TURN THE KEY OFF AND DISCONNECT THE PCA C1. ATTACH THE SCAN TOOL AND SET TO READ BRAKE SENSOR NO. 1 OUTPUT. DOES THE VOLTAGE RAMP UP OR DOWN BETWEEN THE LIMITS (0.2V–4.8V) AS THE PEDAL IS PRESSED AND RELEASED?	GO TO STEP 3.	GO TO STEP 4.
3	WITH NO PRESSURE ON THE BRAKE PEDAL DOES THE SCAN TOOL READ GREATER THAN 0.2VDC?	GO TO STEP 5.	GOT O STEP 4.
4	DISCONNECT THE CONNECTOR AT THE BRAKE PRESSURE SENSOR NO. 1.** PLACE THE KEY IN RUN AND PROBE INTO HARNESS BETWEEN BPS CONNECTOR PINS 1 AND 2. **BRAKE PRESSURE SENSOR #1** CAV / COLOR / FUNCTION 1 / BK/LB / SENSOR GROUND 2 / VT/WT / 5V SUPPLY 3 / RD / BRAKE PRESSURE SENSOR NO. 1 SIGNAL 2 1 3 DOES THE VOLTAGE READ 5VDC?	REPLACE SENSOR.*	GO TO STEP 5.
5	DISCONNECT THE PCA C2 CONNECTOR AND PROBE BETWEEN THE FOLLOWING PINS: **PCA** / **BPS** CC / 1 EE / 1 t / 2 k / 3 **POWERTRAIN CONTROLLER ASSEMBLY – C2** CAV / COLOR / FUNCTION CC / BK/LB / SENSOR GROUND EE / BK/LB / SENSOR GROUND k / RD / BRAKE PRESSURE SENSOR NO. 1 SIGNAL t / VT/WT / 5V SUPPLY R A B P C N M L D E F K J H G c IS CONTINUITY PRESENT?	GO TO STEP 6.	REPAIR OPEN IN CIRCUIT BETWEEN THE PCA AND BPS NO. 1.*
6	PROBE THE PCA MOTHER BOARD (+) 5VDC AND RTN PADS FOR 5VDC. IS 5VDC (+/–10%) PRESENT?	GO TO STEP 7.	DISCONNECT THE PCA C5 CONNECTOR AND INSTALL A NEW APC/LVPS BOARD.*
7	REMOVE THE CVC BOARD AND INSTALL THE CVC I/O PROBING TOOL. REATTACH THE PCA C2 AND PROBE FROM BRAKE SENSOR PIN 3 TO CVC I/O PROBING TOOL PIN 69 FOR CONTINUITY AND FROM BRAKE SENSOR PINS 1 AND 2 TO RTN PAD AND 5V PAD ON MOTHER BOARD RESPECTIVELY. **BRAKE PRESSURE SENSOR #1** CAV / COLOR / FUNCTION 1 / BK/LB / GROUND 2 / VT/WT / 5V SUPPLY 3 / RD / BRAKE PRESSURE SENSOR NO. 1 SIGNAL 2 1 3 IS CONTINUITY PRESENT?	INSTALL A NEW CVC BOARD.*	INSTALL A NEW PCA MOTHER BOARD.*

***Perform Verification TEST VER-1A. **Check connectors - Clean/repair as necessary.**

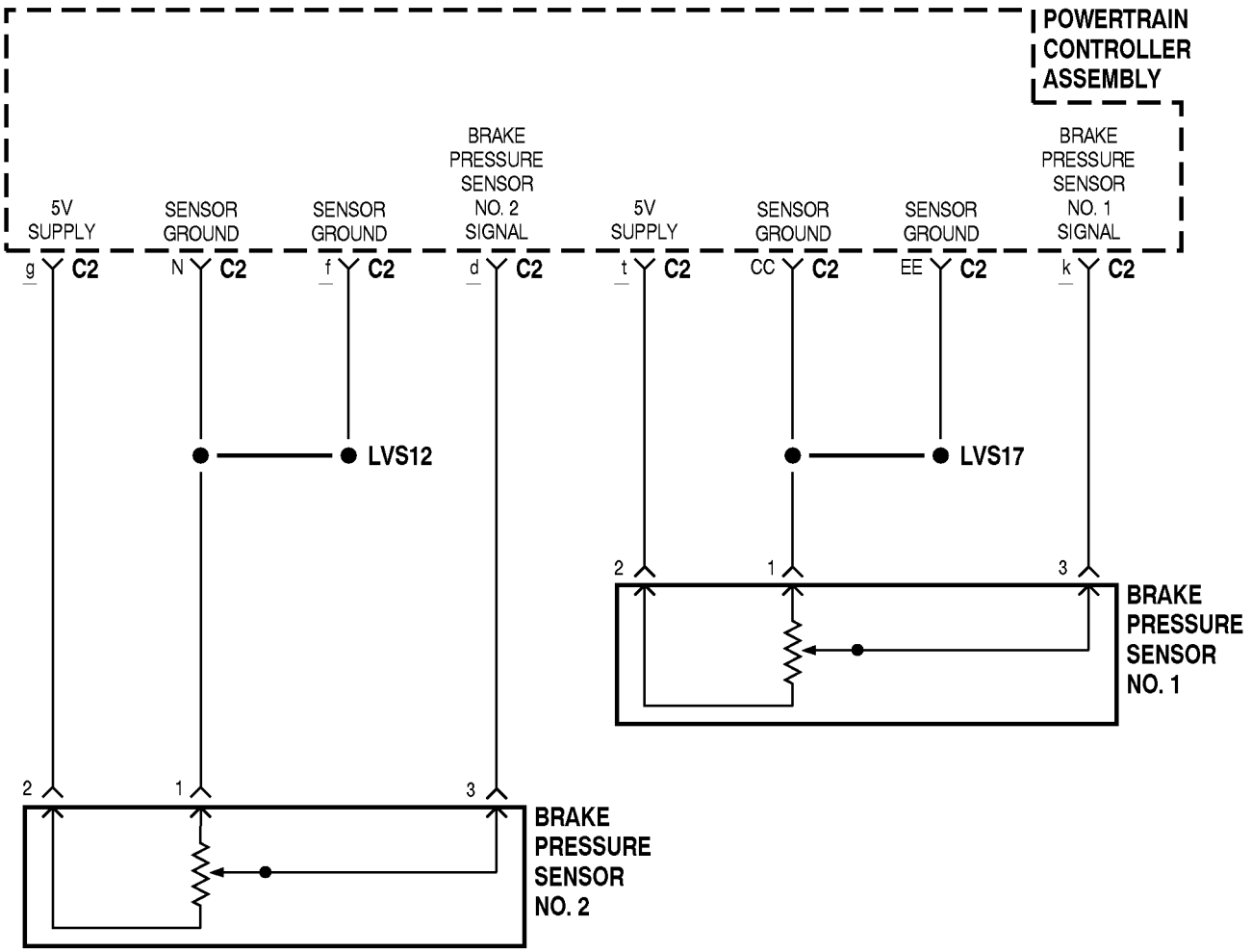

TEST 5 – BRAKE SENSOR–2 FAULT ($45), ($46), ($47)

Description: The brake pressure sensor provides a voltage that indicates the line pressure. The PCA senses that voltage and uses it to determine the amount of regen torque to be commanded to the motor. The PCA always uses the greater of the two input values. Nominally, the voltage equals 0.5V for no line pressure and 4.5V for 500 PSI of line pressure. If the brake pressure sensor #2 is out of range, the brake pressure sensor #1 is used and this fault is set.

WARNING LAMP: THE "BRAKE" LAMP WILL BE ILLUMINATED.

Detection: When the ignition key is in the RUN position and the PRND is in either the R or D position. The brake pressure sensor #2 input value is not within the range of 0.2V to 4.8V.

Related Codes: Brake Sensor – 1 Fault, Brake Sensor 1 & 2 Fault, Brake Tolerance Fault. The Brake Tolerance Fault is set when the difference between the brake pressure sensors is greater than 0.49V.

Possible Causes: The following are possible causes for the BRAKE SENSOR–2 FAULT:

- Sensor failure
- Faulty sensor interface circuitry

TEST 5 – BRAKE SENSOR–2 FAULT ($45), ($46), ($47)

STEP	ACTION	YES	NO
1	HAS TEST 1 BEEN COMPLETED? **NOTE: REFER TO THE PCA–INTERNAL FOLD–OUT SCHEMATIC FOR THE FOLLOWING PROCEDURE.**	GO TO STEP 2.	PERFORM TEST 1.
2	TURN THE KEY OFF AND DISCONNECT THE PCA C1. ATTACH THE SCAN TOOL AND SET TO READ BRAKE SENSOR NO. 2 OUTPUT. DOES THE VOLTAGE RAMP UP AND DOWN BETWEEN THE LIMITS (0.2V–4.8V) AS THE PEDAL IS PRESSED AND RELEASED?	GO TO STEP 3.	GO TO STEP 4.
3	WITH NO PRESSURE ON THE BRAKE PEDAL DOES THE SCAN TOOL READ GREATER THAN 0.2VDC?	GO TO STEP 5.	GOT O STEP 4.
4	DISCONNECT THE CONNECTOR AT THE BRAKE PRESSURE SENSOR NO. 2.** PLACE THE KEY IN RUN AND PROBE INTO HARNESS BETWEEN BPS CONNECTOR PINS 1 AND 2. **BRAKE PRESSURE SENSOR #2** CAV / COLOR / FUNCTION 1 / BK/LB / SENSOR GROUND 2 / VT/WT / 5V SUPPLY 3 / RD/WT / BRAKE PRESSURE SENSOR NO. 2 SIGNAL 2 1 3 DOES THE VOLTAGE READ 5VDC ?	REPLACE SENSOR.*	GO TO STEP 5.
5	DISCONNECT THE PCA C2 CONNECTOR AND PROBE BETWEEN THE FOLLOWING PINS: **PCA** / **BPS** F / 1 N / 1 G / 2 D / 3 **POWERTRAIN CONTROLLER ASSEMBLY – C2** CAV / COLOR / FUNCTION f / BK/LB / SENSOR GROUND N / BK/LB / SENSOR GROUND d / RD/WT / BRAKE PRESSURE SENSOR NO. 2 SIGNAL g / VT/WT / 5V SUPPLY R A B P C N M L D E F K G J H c IS CONTINUITY PRESENT?	GO TO STEP 6.	REPAIR OPEN IN CIRCUIT BETWEEN THE PCA AND BPS NO. 2.*
6	PROBE THE PCA MOTHER BOARD (+) 5VDC AND RTN PADS FOR 5VDC. IS 5VDC PRESENT?	GO TO STEP 7.	DISCONNECT THE PCA C5 CONNECTOR AND INSTALL A NEW APC/LVPS BOARD.*
7	REMOVE THE CVC BOARD AND INSTALL THE CVC I/O PROBING TOOL. REATTACH THE PCA C2 AND PROBE FROM BRAKE SENSOR PIN 3 TO CVC I/O PROBING TOOL PIN 69 FOR CONTINUITY AND FROM BRAKE SENSOR PINS 1 AND 2 TO RTN PAD AND 5V PAD ON MOTHER BOARD RESPECTIVELY. **BRAKE PRESSURE SENSOR #2** CAV / COLOR / FUNCTION 1 / BK/LB / SENSOR GROUND 2 / VT/WT / 5V SUPPLY 3 / RD/WT / BRAKE PRESSURE SENSOR NO. 2 SIGNAL 2 1 3 IS CONTINUITY PRESENT?	INSTALL A NEW CVC BOARD.*	INSTALL A NEW PCA MOTHER BOARD.*

***Perform Verification TEST VER-1A. **Check connectors - Clean/repair as necessary.**

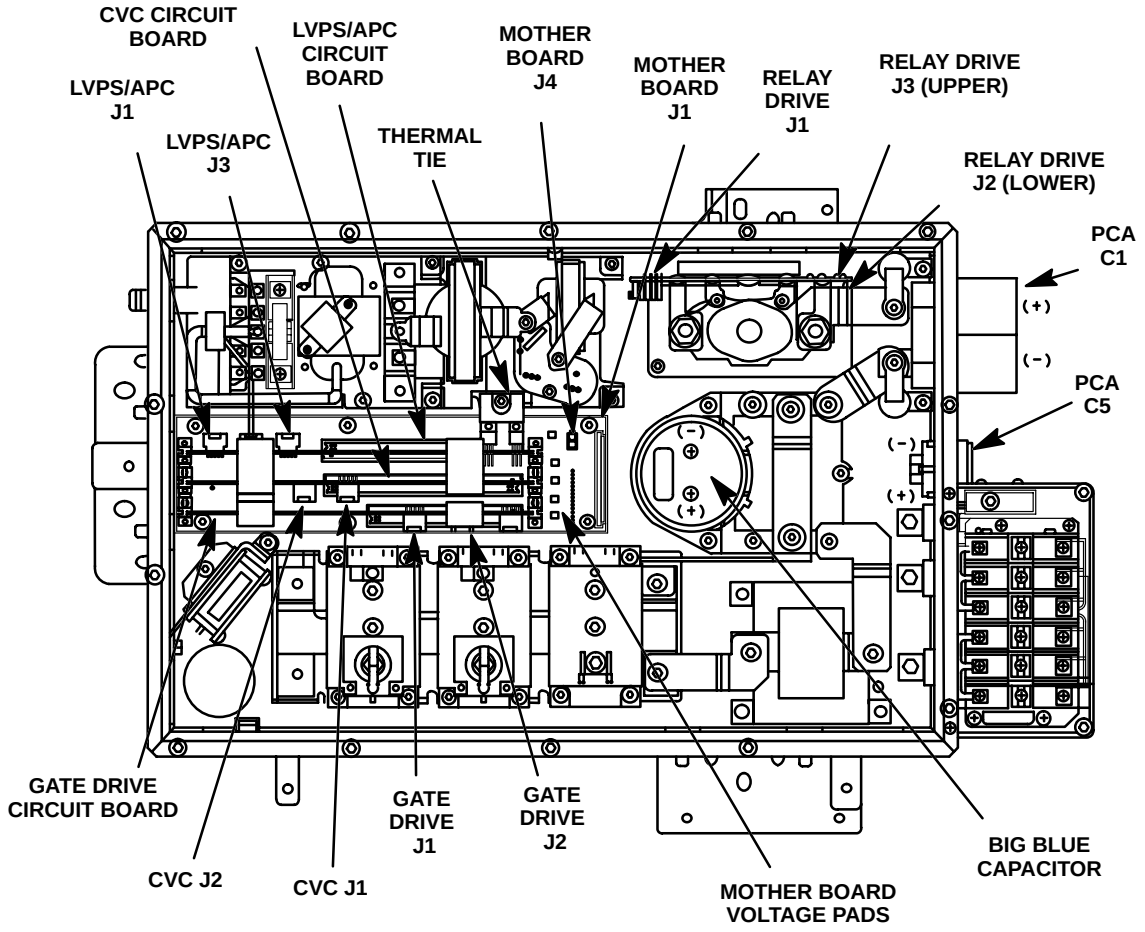

TEST 6 – CAPACITOR PRECHARGE TEST FAILURE ($02)

Description: During a Mode 6 start–up, the PCA closes the precharge relay and then monitors the voltage on the link. When the precharge relay is closed, an 80Ω resistor connects the traction battery to the link. There is a 3200 µF capacitor across the link. If the link voltage rises too fast, this would indicate a failure of the capacitor. This fault will cause the vehicle to be disabled.

WARNING LAMP: THE "SERVICE REQUIRED" LAMP WILL BE ILLUMINATED.

Detection: When the ignition key is in the START position during a Mode 6 startup. The code will set when the PCA link voltage is greater than 75% of the traction battery voltage 262ms, after the precharge relay is closed.

Related Codes: IGBT TEST FAILED.

Related Symptoms: Vehicle will not enter READY mode.

Possible Causes: The following are possible causes for the Capacitor Precharge Test Failure Fault:

- Big Blue capacitor failure
- Loose connection at the Big Blue capacitor
- Link voltage sense circuit failure on the relay drive printed circuit board
- Link voltage sense circuit failure on the CVC printed circuit board

TEST 6 – CAPACITOR PRECHARGE TEST FAILURE ($02)

STEP	ACTION	YES	NO
1	HAS TEST 1 BEEN COMPLETED? **NOTE: REFER TO THE PCA–INTERNAL FOLD–OUT SCHEMATIC FOR THE FOLLOWING PROCEDURE.**	GO TO STEP 2.	PERFORM TEST 1.
2	REMOVE PCA COVER. DISABLE THE TRACTION BATTERY PACK BY TURNING THE HIGH VOLTAGE SERVICE DISCONNECT SWITCH TO OFF. VISUALLY VERIFY THAT THE CAPACITOR IS NOT DAMAGED. IS THERE ANY EVIDENCE OF CAPACITOR DAMAGE?	REPLACE CAPACITOR.*	GO TO STEP 3.
3	TURN THE IGNITION KEY TO THE RUN POSITION. USING A VOLTMETER, MEASURE THE VOLTAGE OF THE +5V, +12V AND +/–15V MOTHER BOARD VOLTAGE PADS. NOTE: IF +12V IS NOT PRESENT, VERIFY 7.5A FUSE ON APC FILTER STAGE. ARE THE PROPER VOLTAGES WITHIN (+/–10%) PRESENT AT THE PADS?	GO TO STEP 4.	REPLACE LVPS/APC BOARD.*
4	USING AN OHMMETER, PROBE THE CAPACITOR CONTACTS. IS THE RESISTANCE LESS THAN 32 OHMS?	REPLACE RELAY DRIVE ASSEMBLY.*	GO TO STEP 5.
5	DISCONNECT THE LEADS FROM THE CAPACITOR TO THE BUS BARS. WITH A CAPACITANCE METER, PROBE THE CAPACITOR CONTACTS. IS THE CAPACITANCE LESS THAN 2600 µf?	REPLACE CAPACITOR.*	GO TO STEP 6.
6	IS THE CAPACITANCE GREATER THAN 3600 µf?	VERIFY CONNECTIONS TO CAPACITOR.*	GO TO STEP 7.
7	DISCONNECT RELAY DRIVE ASSEMBLY J1 CONNECTOR.** INSERT THE PROBING TOOL (MOLEX 70543–0019) ON TO THE HARNESS CONNECTOR. TOUCH THE PROBE LABELED “BATV” TO THE PAD ON THE MOTHERBOARD LABELED “5V” (SEE DIAGRAM FOR DETAILS). USING THE SCAN TOOL, READ LINK VOLTAGE. DOES THE SCAN TOOL READ LINK VOLTAGE AS GREATER THAN 100 VOLTS DC?	GO TO STEP 8.	GO TO STEP 9.
8	TOUCH THE PROBE LABELED “BATV” TO THE PAD ON THE MOTHERBOARD LABELED “RTN” (SEE DIAGRAM FOR DETAILS). USING THE SCAN TOOL, READ LINK VOLTAGE. DOES THE SCAN TOOL READ 0.0 VOLTS DC?	REPLACE RELAY DRIVE ASSEMBLY.*	GO TO STEP 9.
9	DISCONNECT THE MOTHER BOARD J1 CONNECTOR. INSERT THE MOTHERBOARD–PROBING TOOL (MOLEX 14–56–2253) INTO THE CONNECTOR ON THE MOTHERBOARD. TOUCH THE PROBE LABELED “BATV” TO THE PAD ON THE MOTHERBOARD LABELED “5V” (SEE DIAGRAM FOR DETAILS). USING THE SCAN TOOL, READ LINK VOLTAGE. DOES THE SCAN TOOL READ LINK VOLTAGE AS GREATER THAN 100 VOLTS DC?	GO TO STEP 10.	GO TO STEP 11.
10	TOUCH THE PROBE LABELED “BATV” TO THE PAD ON THE MOTHERBOARD LABELED “RTN” (SEE DIAGRAM FOR DETAILS). USING THE SCAN TOOL, READ LINK VOLTAGE. DOES THE SCAN TOOL READ 0.0 VOLTS DC?	REPLACE THE A2A1 CABLE ASSEMBLY.*	GO TO STEP 11.
11	DISCONNECT THE PCA C5 CONNECTOR. REPLACE THE CVC BOARD WITH THE CVC I/O PROBING TOOL. PROBE FROM THE MOTHER BOARD J1 PIN 22 TO CVC I/O PROBING TOOL 72. IS CONTINUITY PRESENT?	REPLACE THE CVC CIRCUIT BOARD.*	REPLACE THE MOTHER BOARD.*

***Perform Verification TEST VER-1A. **Check connectors - Clean/repair as necessary.**

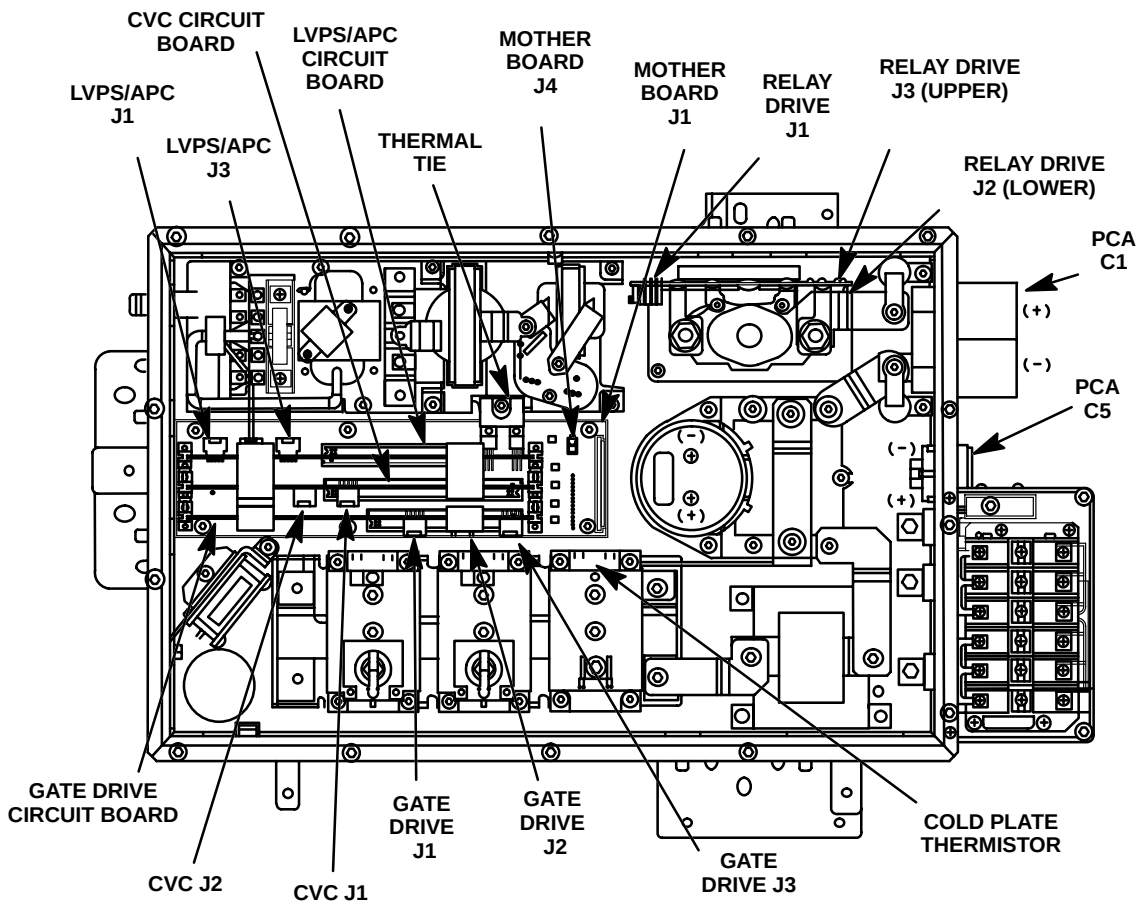

TEST 7 – COLD PLATE TEMPERATURE OUT OF RANGE ($0F)

Description: The cold plate thermistor provides a varying resistance with temperature. This thermistor is used in a voltage divider circuit which is sensed by one of the A/D inputs on the CVC circuit board.

WARNING LAMP: THE "SERVICE REQUIRED" LAMP WILL BE ILLUMINATED.

Detection: When the ignition key is in the RUN position. This code will set when the conversion of the PCA cold plate thermistor yields a temperature value outside the normal operating range of –45°C (–49°F) to +97°C (207°F).

Related Symptoms: Vehicle will not enter READY mode.

Possible Causes: The following are possible causes for the COLD PLATE TEMPERATURE OUT OF RANGE FAULT:

- Open connection where the thermistor plugs into the mother board
- Faulty thermistor
- Faulty CVC printed circuit board

TEST 7 – COLD PLATE TEMPERATURE OUT OF RANGE ($0F)

STEP	ACTION	YES	NO
1	HAS TEST 1 BEEN COMPLETED? **NOTE: REFER TO THE PCA–INTERNAL FOLD–OUT SCHEMATIC FOR THE FOLLOWING PROCEDURE.**	GO TO STEP 2.	PERFORM TEST 1.
2	DISCONNECT THE PCA C1 AND C5 CONNECTORS AND OPEN THE PCA. IS THE TORQUE VALUE FOR THE THERMISTOR TO IGBT COLD PLATE MOUNTING 21 IN/LB?	GO TO STEP 3.	REPAIR AS NECESSARY.*
3	ARE THE MOTHER BOARD J1 6/7 (LEADS TO THE THERMISTOR) FULLY SEATED IN THE J1 CONNECTOR CABLE ASSEMBLY?	GO TO STEP 4.	REPAIR AS NECESSARY.*
4	REMOVE J1 AND INSTALL CABLE PROBING TOOL (MOLEX 70543–0024). **NOTE: PERFORM THE FOLLOWING MEASUREMENT AFTER THE VEHICLE HAS REACHED ROOM TEMPERATURE.** MEASURE THE THERMISTOR RESISTANCE AT J1 6/7. IS RESISTANCE APPROXIMATELY 10K OHMS AT 25°C (77°F)?	GO TO STEP 5.	REPLACE A2A1 CABLE ASSEMBLY.*
5	INSTALL MOTHER BOARD J1 PROBING TOOL (MOLEX 14–56–2253). REPLACE THE CVC BOARD WITH THE CVC I/O PROBING TOOL. PROBE FOR CONTINUITY FROM J1 6/7 TO CVC I/O TOOL AT 77/79. IS CONTINUITY PRESENT?	INSTALL NEW CVC BOARD.*	INSTALL NEW MOTHER BOARD.*

***Perform Verification TEST VER-1A. **Check connectors - Clean/repair as necessary.**

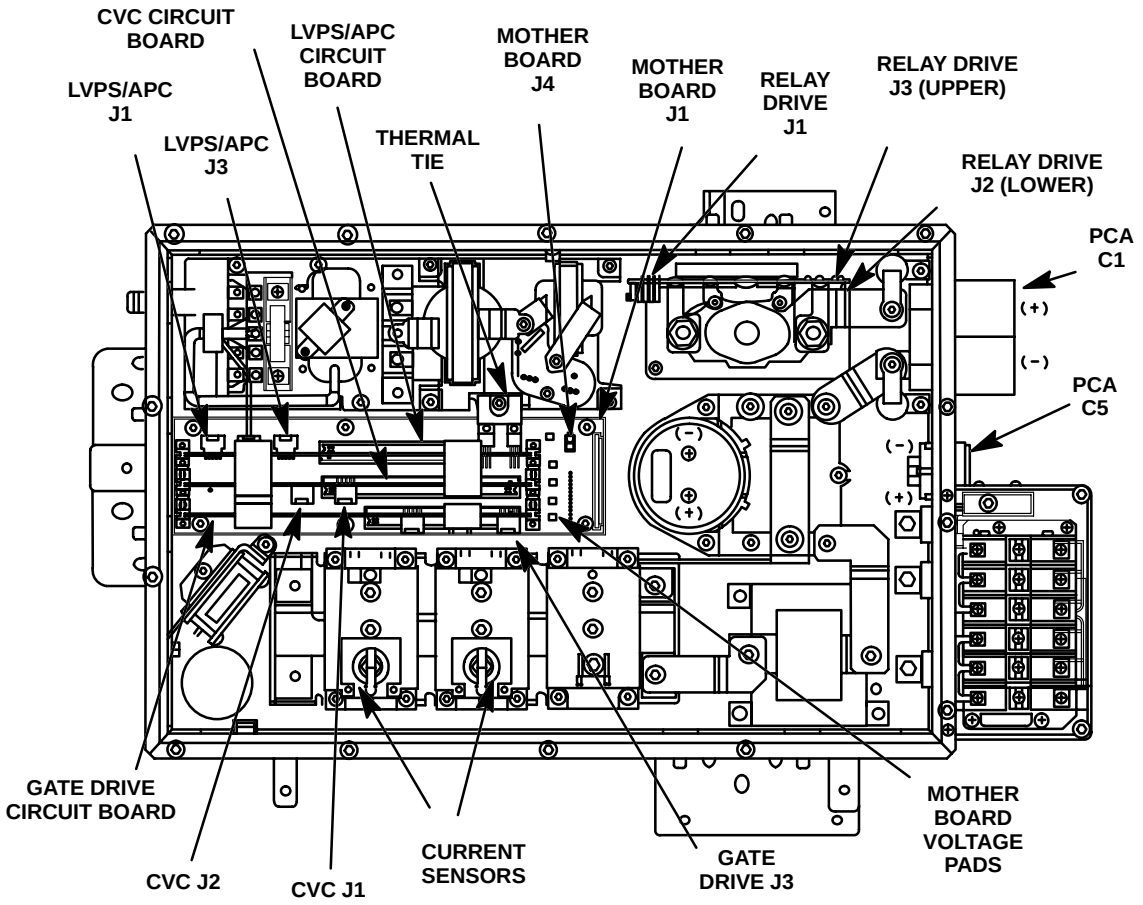

TEST 9 – CURRENT SENSOR TEST FAILURE ($13)

Description: The PCA has two current sensors to monitor the flow in phases A and C of the motor windings. The sensors can measure currents in the range of –600 amps to +600 amps. The over–current trip points are set at ± 585 amps. If any of the below conditions exist (see detection), the vehicle will be disabled.

WARNING LAMP: THE "SERVICE REQUIRED" LAMP WILL BE ILLUMINATED.

Detection: When the ignition key is in the RUN position. This DTC sets when one of the following conditions exist during the power–on of the PCA:

- The current sensors do not read nominally zero current (2.5V)
- The current sensors do not read positive or negative full scale
- The over–current detection circuit does not activate when an over–current level is switched into the input

Related Symptoms: Vehicle will not enter READY mode.

Possible Causes: The following are possible causes for the CURRENT SENSOR TEST FAULT:

- One or both of the current sensors have failed
- Loose current sensor connector at CVC printed circuit board
- Faulty current sensor interface circuitry on the CVC printed circuit board
- Faulty over current detection circuitry on the CVC printed circuit board

TEST 9 – CURRENT SENSOR TEST FAILURE ($13)

STEP	ACTION	YES	NO
1	HAS TEST 1 BEEN COMPLETED? **NOTE: REFER TO THE PCA–INTERNAL FOLD–OUT SCHEMATIC FOR THE FOLLOWING PROCEDURE.**	GO TO STEP 2.	PERFORM TEST 1.
2	ARE PCA DTC'S PCA PILOT FAULT, POSITIVE 15V FAULT OR NEGATIVE 15V FAULT PRESENT?	REPAIR OTHER DTC'S FIRST.*	GO TO STEP 3.
3	DISCONNECT PCA C1 CONNECTOR AND OPEN THE PCA. DISCONNECT THE J1 AND J2 CURRENT SENSOR CONNECTORS AT THE CVC BOARD AND REPLACE WITH PWB PROBING TOOL (MOLEX 14–56–2073). USING A VOLTMETER, MEASURE FROM J1 PIN 4 TO J1 PIN 3 AND FROM J2 PIN 4 TO J2 PIN 3. IS 15VDC PRESENT ON BOTH MEASUREMENTS?	REPLACE BOTH CURRENT SENSORS.*	CALL EPIC HOT LINE.*

***Perform Verification TEST VER-1A. **Check connectors - Clean/repair as necessary.**

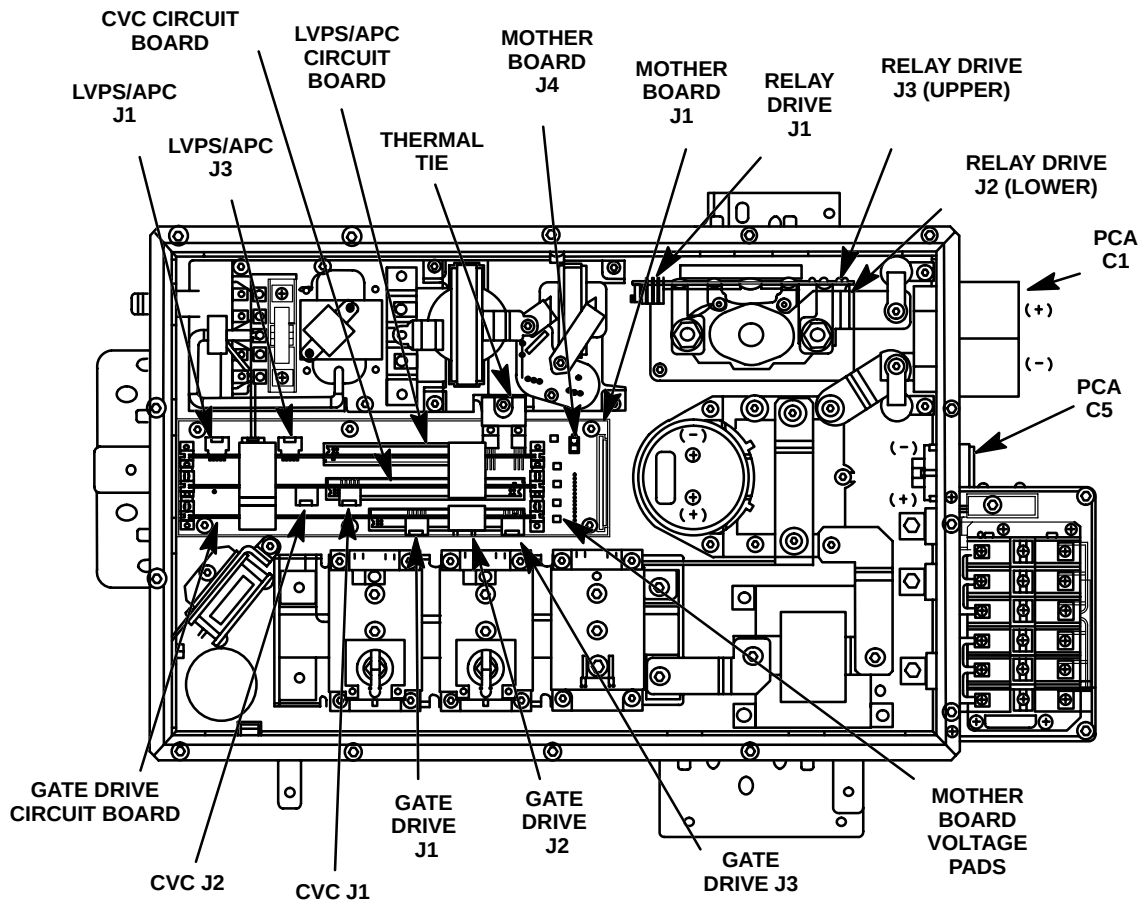

TEST 10 – DISCHARGE FAULT ($07)

Description: The PCA link will not discharge for four minutes after the ignition key is turned to the OFF position. If the ignition key is not turned on within the four minute period, the precharge relay will open causing the link to discharge through an 80Ω resistor.

WARNING LAMP: THE "SERVICE REQUIRED" AND LAMP WILL BE ILLUMINATED.

Detection: Four minutes after the ignition key is turned to the OFF position following a successful start. This code will set when the link voltage is greater than 50V two seconds after the precharge relay is commanded to be opened.

Related Code: Main Relay Failure.

Possible Causes:

- Faulty precharge relay on the relay drive printed circuit board
- Faulty discharge resistor on the relay drive printed circuit board
- The link voltage sense circuit is defective on the relay drive printed circuit board
- The link voltage sense circuit is defective on the CVC printed circuit board

TEST 10 – DISCHARGE FAULT ($07)

STEP	ACTION	YES	NO
1	HAS TEST 1 BEEN COMPLETED? **NOTE: REFER TO THE PCA−INTERNAL FOLD−OUT SCHEMATIC FOR THE FOLLOWING PROCEDURE.**	GO TO STEP 2.	PERFORM TEST 1.
2	DISABLE THE TRACTION BATTERY PACK BY TURNING THE SERVICE DISCONNECT SWITCH TO THE OFF POSITION. **WARNING: WHENEVER THIS DTC IS DECLARED, THERE IS A VERY HIGH ENERGY POTENTIAL STILL STORED BY THE CAPACITOR WITHIN THE PCA! THAT POTENTIAL IS PRESENT AT THE EXTERNAL PINS OF THE PCA C1 HIGH VOLTAGE CONNECTOR!** USING A VOLTMETER, MEASURE THE VOLTAGE OF THE +5V, +12V AND +/−15V MOTHER BOARD PADS. NOTE: IF +12V IS NOT PRESENT, VERIFY 7.5A FUSE ON APC FILTER STAGE. ARE THE PROPER VOLTAGES PRESENT AT THE PADS?	GO TO STEP 3.	REPLACE LVPS/APC BOARD.*
3	DISCONNECT THE RELAY DRIVE ASSEMBLY J1 CONNECTOR.* INSERT THE PROBING TOOL (MOLEX 70543−0019) ON TO THE HARNESS CONNECTOR. TOUCH THE PROBE LABELED “BATV” TO THE PAD ON THE MOTHERBOARD LABELED “5V”. TURN THE IGNITION KEY TO RUN. SET THE SCAN TOOL TO READ LINK VOLTAGE. DOES THE SCAN TOOL READ 500VDC?	GO TO STEP 4.	GO TO STEP 5.
4	TOUCH THE PROBE LABELED “BATV” TO THE PAD ON THE MOTHER BOARD LABELED “RTN” (SEE DIAGRAM FOR DETAILS). SET THE SCAN TOOL TO READ LINK VOLTAGE. DOES THE SCAN TOOL READ 0.0VDC?	REPLACE RELAY DRIVE ASSEMBLY.*	GO TO STEP 5.
5	DISCONNECT THE PCA C5.** REPLACE THE CVC BOARD WITH THE CVC I/O PROBING TOOL. USING AN OHMMETER, PROBE FROM CONNECTOR TEST TOOL (MOLEX 70543−0019) PIN 15 TO CVC I/O PROBING TOOL PIN 72 FOR CONTINUITY. IS THE CIRCUIT OPEN OR SHORTED TO GROUND?	GO TO STEP 6.	REPLACE CVC BOARD.*
6	DISCONNECT THE MOTHER BOARD J1 CONNECTOR.** INSTALL THE MOTHER BOARD PROBING TOOL (MOLEX 14−56−2253). USING AN OHMMETER, PROBE FOR CONTINUITY FROM MOTHER BOARD PIN 22 TO CVC I/O PROBING TOOL PIN 72. IS THE CIRCUIT OPEN OR SHORTED TO GROUND?	REPLACE THE A2A1 CABLE ASSEMBLY.*	REPLACE MOTHER BOARD.*

***Perform Verification TEST VER-1A. **Check connectors - Clean/repair as necessary.**

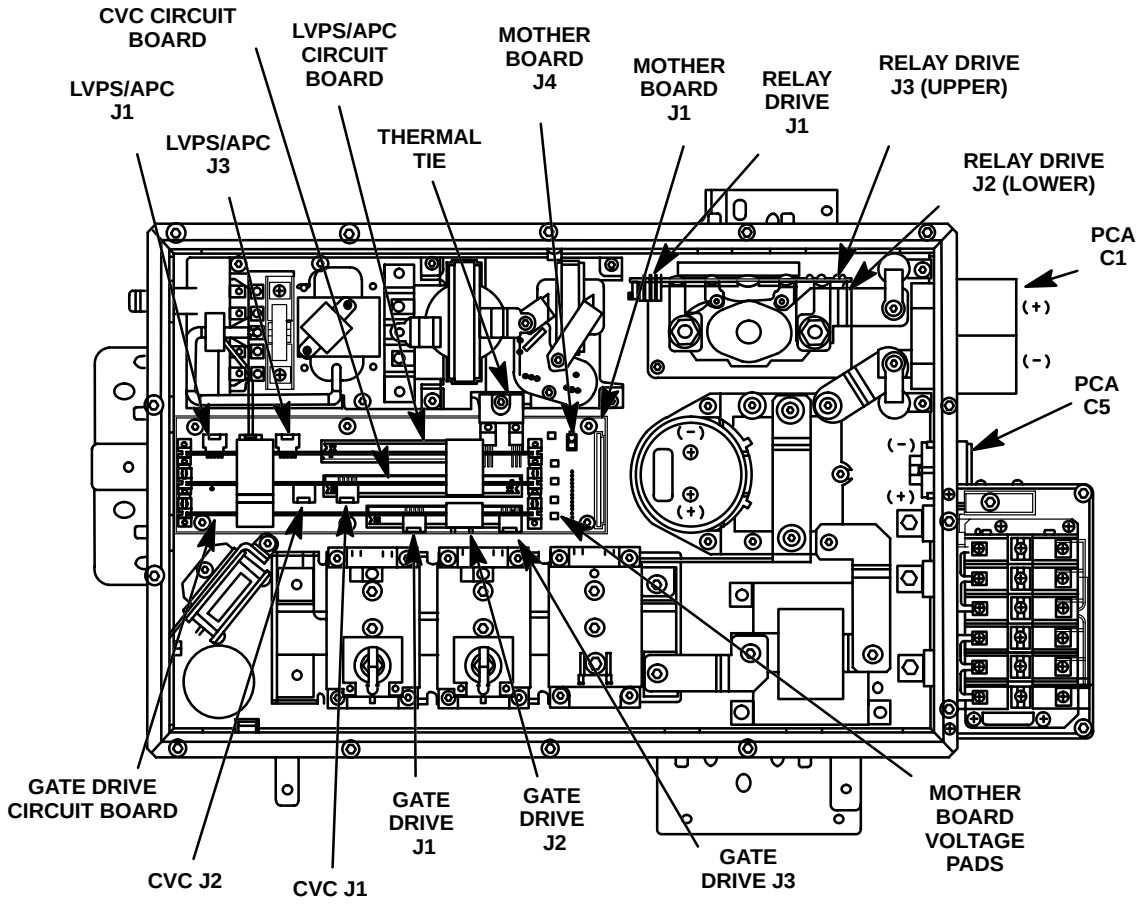

TEST 11 – DISCHARGE INTERRUPT ($1F)

Description: For a normal discharge, the main relay will be open. If the main relay is closed and the discharge signal is active, this DTC will set.

WARNING LAMP: THE "SERVICE REQUIRED" LAMP WILL BE ILLUMINATED.

Detection: When the ignition key is in the RUN position. Voltage is sensed across the discharge resistor while the main relay is closed.

Related Symptoms: Vehicle will not enter READY mode. If the failure occurred during driving, the READY display will be turned OFF, the SERVICE REQUIRED lamp will turned ON and the vehicle will be disabled and will coast to a stop.

Possible Causes: The following are possible causes for the DISCHARGE INTERRUPT FAULT:

- Faulty relay drive printed circuit board
- Interconnection fault

TEST 11 – DISCHARGE INTERRUPT ($1F)

STEP	ACTION	YES	NO
1	HAS TEST 1 BEEN COMPLETED? **NOTE: REFER TO THE PCA–INTERNAL FOLD–OUT SCHEMATIC FOR THE FOLLOWING PROCEDURE.**	GO TO STEP 2.	PERFORM TEST 1.
2	IS PCA DTC “PILOT DROPOUT FAULT” ALSO REPORTED?	REPAIR DTC “PILOT DROPOUT FAULT” THEN RETEST.*	GO TO STEP 3.
3	DISCONNECT THE PCA C1 CONNECTOR AND OPEN THE PCA.** SET THE SCAN TOOL TO READ TRACTION BATTERY VOLTAGE. DISCONNECT THE RELAY DRIVE ASSEMBLY J1 CONNECTOR AND SET THE KEY TO RUN. INSERT THE PROBING TOOL (MOLEX 70543–0019) ON TO THE HARNESS CONNECTOR. TOUCH THE PROBE LABELED “BATV” TO THE PAD ON THE MOTHERBOARD LABELED “5V” (SEE DIAGRAM FOR DETAILS). DOES THE SCAN TOOL READ 500VDC?	GO TO STEP 4.	GO TO STEP 5.
4	TOUCH THE PROBE LABELED “BATV” TO THE PAD ON THE MOTHERBOARD LABELED “RTN” (SEE DIAGRAM FOR DETAILS). DOES THE SCAN TOOL READ 0.0 VDC?	REPLACE THE RELAY DRIVE ASSEMBLY.*	GO TO STEP 5.
5	DISCONNECT THE MOTHER BOARD J1 CONNECTOR.** INSERT THE MOTHERBOARD–PROBING TOOL (MOLEX 14–56–2253) INTO THE CONNECTOR ON THE MOTHERBOARD. TOUCH THE PROBE LABELED “BATV” TO THE PAD ON THE MOTHERBOARD LABELED “5V” (SEE DIAGRAM FOR DETAILS). TOUCH THE PROBE LABELED “BATV” TO THE PAD ON THE MOTHERBOARD LABELED “RTN” (SEE DIAGRAM FOR DETAILS). DO BOTH TESTS PASS NOW?	REPLACE THE A2A1 CABLE.*	GO TO STEP 6.
6	DISCONNECT THE PCA C2 CONNECTOR.** REPLACE THE CVC BOARD WITH THE CVC I/O PROBING TOOL. PROBE FROM THE MOTHER BOARD J1 PIN 21 TO I/O PROBING TOOL PIN 74 FOR CONTINUITY. IS CONTINUITY PRESENT?	REPLACE THE CVC BOARD.*	REPLACE THE MOTHER BOARD.*

***Perform Verification TEST VER-1A. **Check connectors - Clean/repair as necessary.**

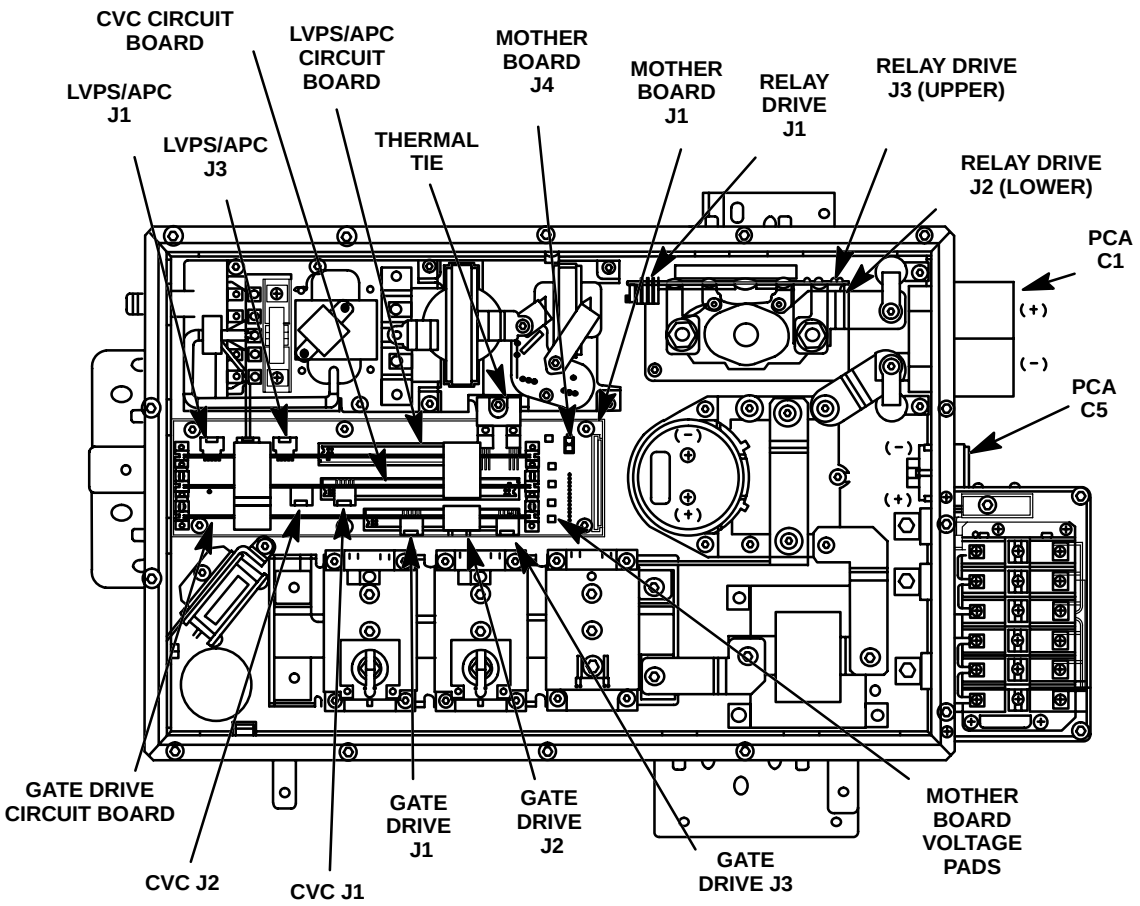

TEST 12 – DISCHARGE SIGNAL FAULT ($1C)

Description: The discharge signal should be active while discharging if the link voltage is greater than 174V.

WARNING LAMP: THE "SERVICE REQUIRED" LAMP WILL BE ILLUMINATED.

Detection: Four minutes after the ignition key is turned to the OFF position following a successful start. The PCA senses that both the link voltage is greater than 174V and the link discharge signal is inactive during discharge.

Related Codes: Service Required – PCA

Possible Causes: The following are possible causes for the DISCHARGE SIGNAL FAULT:

- The link voltage sense circuit is faulty on the relay drive printed circuit board
- The link voltage sense circuit is faulty on the CVC printed circuit board
- Faulty relay drive printed circuit board
- Interconnection fault

TEST 12 – DISCHARGE SIGNAL FAULT ($1C)

STEP	ACTION	YES	NO
1	HAS TEST 1 BEEN COMPLETED? **NOTE: REFER TO THE PCA–INTERNAL FOLD–OUT SCHEMATIC FOR THE FOLLOWING PROCEDURE.**	GO TO STEP 2.	PERFORM TEST 1.
2	DISCONNECT THE RELAY DRIVE ASSEMBLY J1 CONNECTOR AND SET KEY TO RUN.** INSERT THE PROBING TOOL (MOLEX 70543–0019) ON TO THE HARNESS CONNECTOR. TOUCH THE PROBE LABELED “BATV” TO THE PAD ON THE MOTHERBOARD LABELED “5V”. SET THE SCAN TOOL TO READ LINK VOLTAGE. DOES THE SCAN TOOL READ 500VDC?	GO TO STEP 3.	GO TO STEP 4.
3	TOUCH THE PROBE LABELED “BATV” TO THE PAD ON THE MOTHERBOARD LABELED “RTN” (SEE DIAGRAM FOR DETAILS). SET THE SCAN TOOL TO READ LINK VOLTAGE. DOES THE SCAN TOOL READ 0.0 VDC?	REPLACE THE RELAY DRIVE ASSEMBLY.*	GO TO STEP 4.
4	DISCONNECT THE MOTHER BOARD J1 CONNECTOR.** INSERT THE MOTHERBOARD–PROBING TOOL (MOLEX 14–56–2253) INTO THE CONNECTOR ON THE MOTHERBOARD. TOUCH THE PROBE LABELED “BATV” TO THE PAD ON THE MOTHERBOARD LABELED “5V” (SEE DIAGRAM FOR DETAILS). SET THE SCAN TOOL TO READ LINK VOLTAGE. DOES THE SCAN TOOL READ 500VDC?	GO TO STEP 5.	GO TO STEP 6.
5	TOUCH THE PROBE LABELED “BATV” TO THE PAD ON THE MOTHERBOARD LABELED “RTN” (SEE DIAGRAM FOR DETAILS). SET THE SCAN TOOL TO READ LINK VOLTAGE. DOES THE SCAN TOOL READ 0.0VDC?	REPLACE THE A2A1 CABLE ASSEMBLY.*	GO TO STEP 6.
6	DISCONNECT THE PCA C5 CONNECTOR AND REPLACE THE CVC BOARD WITH THE CVC I/O PROBING TOOL. PROBE FROM MOTHER BOARD J1 PIN 22 TO CVC I/O PROBING TOOL PIN 72 FOR AN OPEN CIRCUIT. IS THERE AN OPEN CIRCUIT?	REPLACE THE MOTHER BOARD.*	REPLACE THE CVC BOARD.*

***Perform Verification TEST VER-1A. **Check connectors - Clean/repair as necessary.**

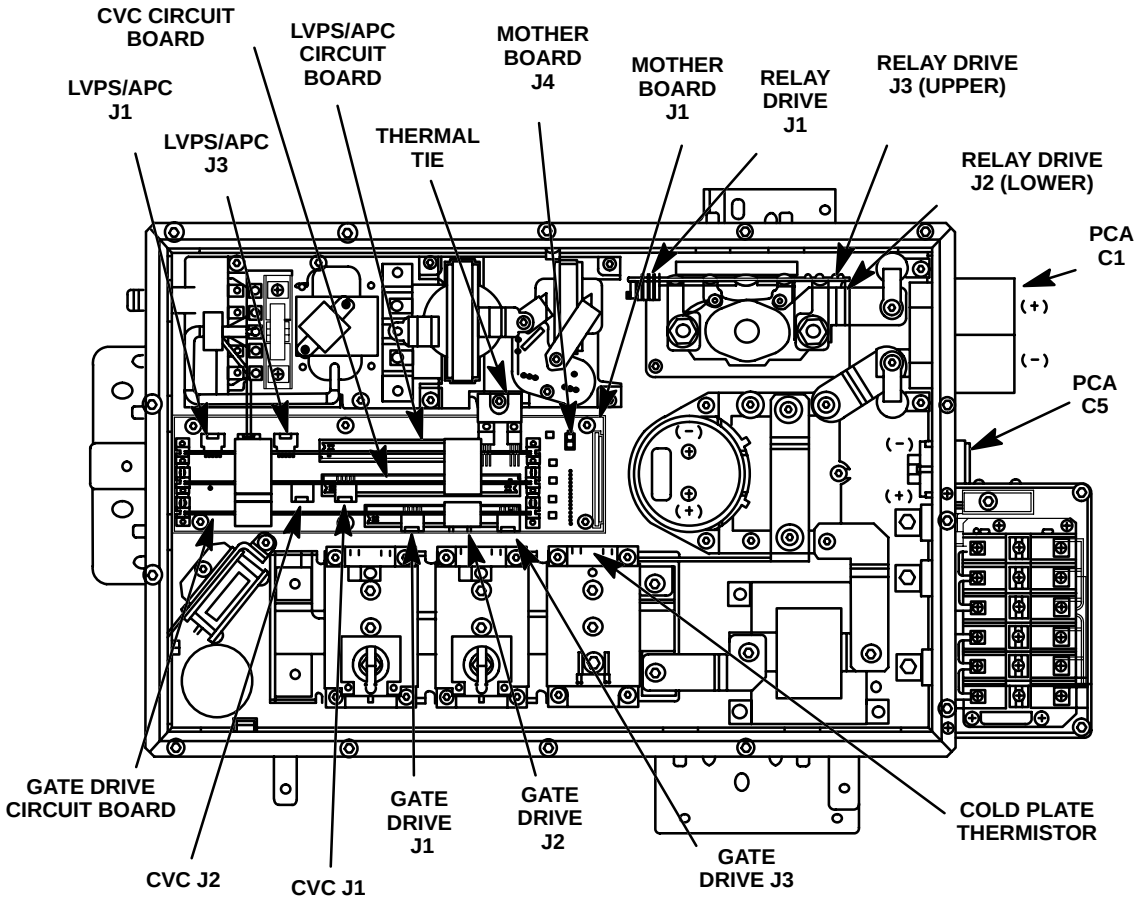

TEST 13 – HIGH TEMPERATURE ($18)

Description: The CVC monitors the temperature of the IGBT plate and the temperature of the traction motor received from the MCM. If any of the below conditions are met (see detection), then the CVC will set the DTC, turn on the OVER TEMP lamp, and limit power of the system.

WARNING LAMP: THE "OVER TEMP" LAMP WILL BE ILLUMINATED.

Detection: When the ignition key is in the RUN position. The IGBT cold plate thermistor yields a temperature value that is greater than or equal to 84°C (183°F) or the traction motor temperature received from the BEMS™ is greater than or equal to 110°C (230°F).

Related Symptoms: Vehicle will be torque limited or have sensation of loss of power. The OVER TEMP lamp will be illuminated.

Possible Causes: The following are possible causes for the HIGH TEMPERATURE FAULT:

- Loss of oil flow in system due to: oil pump failure, low oil level, blockage in oil lines
- Loss of battery pack coolant flow in system due to: coolant pump failure, low coolant level, blockage in coolant lines
- Abnormal operating conditions
- Failed thermistor

TEST 13 – HIGH TEMPERATURE ($18)

STEP	ACTION	YES	NO
1	HAS TEST 1 BEEN COMPLETED? **NOTE: REFER TO THE PCA–INTERNAL FOLD–OUT SCHEMATIC FOR THE FOLLOWING PROCEDURE.**	GO TO STEP 2.	PERFORM TEST 1.
2	IS OIL LEVEL CORRECT?	GO TO STEP 3.	FILL OR DRAIN AS NECESSARY.*
3	ARE THERE ANY KINKED OIL LINES OR RADIATOR OBSTRUCTIONS?	REPAIR AS NECESSARY.*	GO TO STEP 4.
4	ARE ANY OF THE FOLLOWING PCA DTC'S ALSO DECLARED: COLD PLATE TEMPERATURE OUT OF RANGE OIL PRESSURE FAULT OIL PUMP PWM FAILURE OIL SWITCH FAULT (STUCK CLOSED)	REPAIR AFFECTED DTC BEFORE PROCEEDING.*	GO TO STEP 5.
5	ARE THE MOTHER BOARD J1–6/7 LEADS FOR THE THERMISTOR FULLY SEATED IN THE J1 CONNECTOR CABLE ASSEMBLY?	GO TO STEP 6.	REPAIR AS NECESSARY.*
6	REMOVE J1 AND INSTALL CABLE PROBING TOOL (MOLEX 70543–0024) AND MEASURE THE THERMISTOR RESISTANCE AT J1–6/7.** **NOTE: PERFORM THE FOLLOWING MEASUREMENT AFTER THE VEHICLE HAS REACHED ROOM TEMPERATURE.** IS RESISTANCE APPROXIMATELY 10K OHMS AT 25°C (77°F)?	CALL EPIC HOT LINE.*	REPLACE A2A1 CABLE ASSEMBLY.*

***Perform Verification TEST VER-1A. **Check connectors - Clean/repair as necessary.**

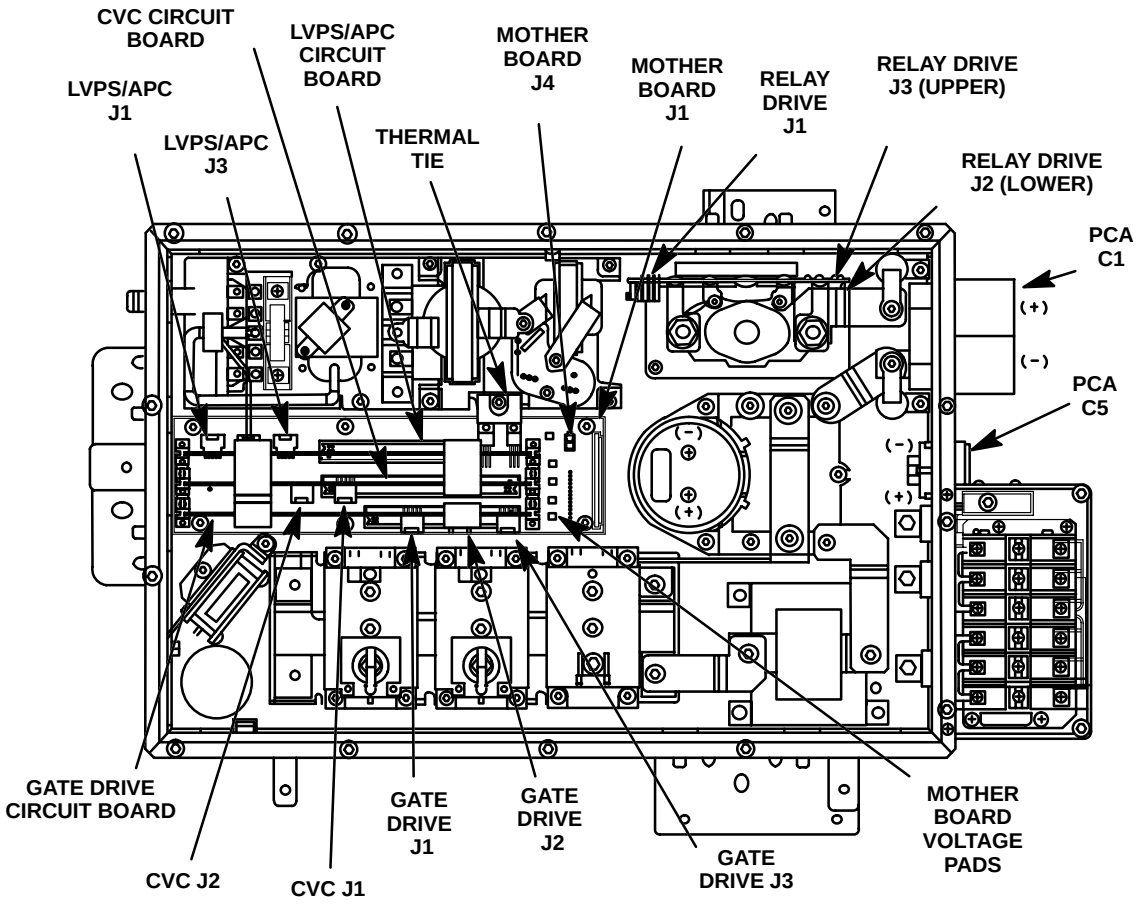

TEST 14 – HIGH VOLTAGE INPUT FAULT ($15)

Description: After the ignition key is turned to the OFF position, the BEMS™ will open the safety relay and the PCA will open the PCA main relay. The PCA then waits four minutes before discharging the link by opening the precharge relay. Forty–five seconds after discharging, the PCA monitors its high voltage input.

WARNING LAMP: THE "SERVICE REQUIRED" LAMP WILL BE ILLUMINATED.

Detection: When the high voltage input at the PCA is greater than 50V four minutes and 45 seconds after the ignition key is turned to the OFF position.

Possible Causes: The following are possible causes for the HIGH VOLTAGE INPUT FAULT:

- The safety relay is fused closed
- The BEMS™ safety relay control circuit is faulty
- The traction battery voltage sense circuit is faulty on the relay drive printed circuit board
- The traction battery voltage sense circuit is faulty on the CVC printed circuit board
- The discharge path for the EMI capacitors is faulty

TEST 14 – HIGH VOLTAGE INPUT FAULT ($15)

STEP	ACTION	YES	NO
1	HAS TEST 1 BEEN COMPLETED? **NOTE: REFER TO THE PCA–INTERNAL FOLD–OUT SCHEMATIC FOR THE FOLLOWING PROCEDURE.**	GO TO STEP 2.	PERFORM TEST 1.
2	USING THE SCAN TOOL, CHECK THE BEMS™ FOR DTC'S. ARE THERE ANY BEMS™ DTC'S?	GO TO STEP 3.	GO TO STEP 4.
3	CORRECT BEMS™ DTC'S. CLEAR PCA DTC'S. USING THE SCAN TOOL, RETEST FOR PCA DTC'S. IS DTC HIGH VOLTAGE INPUT FAULT STILL PRESENT?	GO TO STEP 4.	REPAIR SUCCESSFUL.*
4	SET THE SCAN TOOL TO READ TRACTION BATTERY VOLTAGE. DISCONNECT THE RELAY DRIVE ASSEMBLY J1 CONNECTOR. INSERT THE PROBING TOOL (MOLEX 70543–0019) ON TO THE HARNESS CONNECTOR. TOUCH THE PROBE LABELED "BATV" TO THE PAD ON THE MOTHERBOARD LABELED "5V". TURN THE IGNITION KEY TO RUN. DOES THE SCAN TOOL READ 500VDC?	GO TO STEP 5.	GO TO STEP 6.
5	TOUCH THE PROBE LABELED "BATV" TO THE PAD ON THE MOTHER BOARD LABELED "RTN". USING THE SCAN TOOL, READ LINK VOLTAGE. DOES THE SCAN TOOL READ 0.0VDC?	REPLACE RELAY DRIVE ASSEMBLY.*	GO TO STEP 6.
6	DISCONNECT THE MOTHER BOARD J1 CONNECTOR.** INSERT THE MOTHERBOARD–PROBING TOOL (MOLEX 14–56–2253) INTO THE CONNECTOR ON THE MOTHERBOARD. TOUCH THE PROBE LABELED "BATV" TO THE PAD ON THE MOTHERBOARD LABELED "5V". USING THE SCAN TOOL, READ LINK VOLTAGE. DOES THE SCAN TOOL READ 500VDC?	GO TO STEP 7.	GO TO STEP 8.
7	TOUCH THE PROBE LABELED "BATV" TO THE PAD ON THE MOTHERBOARD LABELED "RTN". USING THE SCAN TOOL, READ LINK VOLTAGE. DOES THE SCAN TOOL READ 0.0VDC?	REPLACE THE A2A1 CABLE ASSEMBLY.*	GO TO STEP 8.
8	DISCONNECT THE PCA C5 CONNECTOR AND REPLACE THE CVC BOARD WITH THE CVC I/O PROBING TOOL. PROBE FROM THE MOTHER BOARD J1 PIN 21 TO THE CVC I/O PROBING TOOL PIN 74 FOR CONTINUITY. IS CONTINUITY PRESENT?	INSTALL A NEW MOTHER BOARD.*	INSTALL A NEW CVC BOARD.*

***Perform Verification TEST VER-1A. **Check connectors - Clean/repair as necessary.**

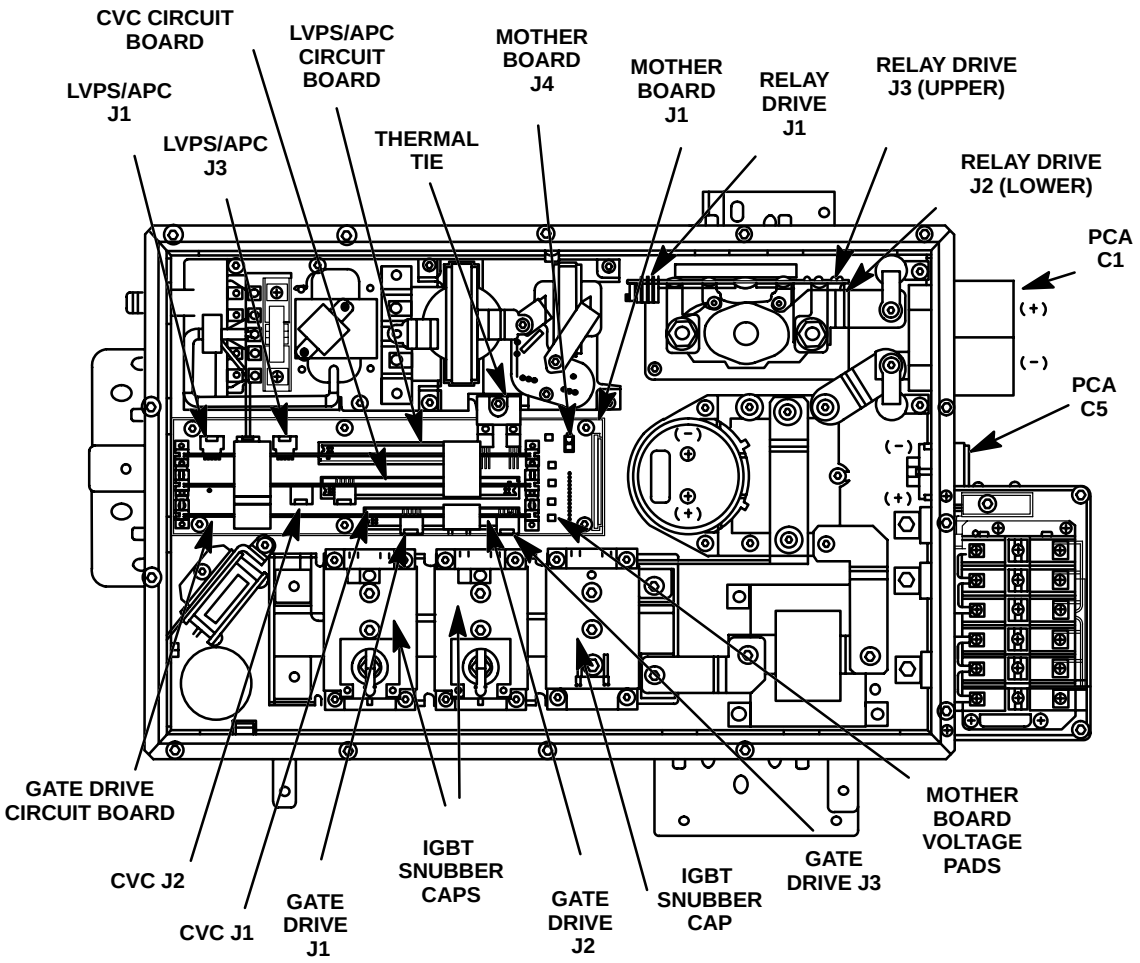

TEST 15 – IGBT TEST FAILED ($05)

Description: During start–up, after the link is pre–charged and the main relay is closed, the PCA runs the IGBT short test and the IGBT open tests. The link is checked for current flow using a midpoint detection circuit. If either test fails, the vehicle is disabled.

WARNING LAMP: THE "SERVICE REQUIRED" LAMP WILL BE ILLUMINATED.

Detection: When the ignition key is in the START position. This code will set when one of the following tests on the IGBT's fails:

- The IGBT's are all turned off, and the midpoint detection circuitry on the gate drive printed circuit board is indicating one or more of the IGBT gates are closed.
- Each IGBT gate (both upper and lower) is turned on separately, and the midpoint detection circuitry on the gate drive printed circuit board is indicating that an enabled gate is open.

Related Symptoms: Vehicle will not enter READY mode.

Possible Causes: The following are possible causes for the IGBT TEST FAILED FAULT:

- IGBT A, B, or C failure
- Gate drive printed circuit board failure
- IGBT gate drive connection bad
- Mid–point detection circuit failure on the gate drive circuit board
- Loose PCA bus bar connection

TEST 15 – IGBT TEST FAILED ($05)

STEP	ACTION	YES	NO
1	HAS TEST 1 BEEN COMPLETED?	GO TO STEP 2.	PERFORM TEST 1.
2	DISCONNECT THE PCA C1 CONNECTOR AND OPEN THE PCA. ARE ALL THREE IGBT DRIVE CONNECTIONS TO THE GATE BOARD (AND THEIR RESPECTIVE PINS) FULLY SEATED?	GO TO STEP 3.	REPAIR AS NECESSARY.*
3	USE THE SCAN TOOL TO TEST IF ANY OF THE IGBT'S ARE OPEN OR SHORTED (THE SCAN TOOL CANNOT IDENTIFY WHICH IGBT IS SHORTED). DOES THE SCAN TOOL SHOW A SHORT?	GO TO STEP 5.	GO TO STEP 4.
4	DOES THE SCAN TOOL SHOW AN OPEN?	GO TO STEP 11.	RETEST FOR DTC.*
5	DISCONNECT THE PCA C5 CONNECTOR AND MEASURE RESISTANCE BETWEEN THE VLINK (+) AND (−) BUS BARS. IS EITHER LESS THAN 1.0 MEG Ω?	INSTALL A NEW GATE BOARD.*	GO TO STEP 6.
6	REMOVE ALL THREE IGBT SNUBBER CAPS KEEPING THEM WITH THEIR RESPECTIVE IGBT. MEASURE THE CAPACITANCE OF EACH SNUBBER CAP. IS THE CAPACITANCE EQUAL TO 52 µf ± 10 µf?	GO TO STEP 7.	REPLACE THE FAILED SNUBBER CAP AND ITS RELATED IGBT.*
7	DISCONNECT THE IGBT DRIVE CONNECTORS FROM THE GATE DRIVE BOARD AND MEASURE THE CAPACITANCE BETWEEN THE GATE AND EMITTER TERMINALS OF EACH IGBT. IS THE CAPACITANCE LESS THAN 0.59 µf?	REPLACE THE EFFECTED IGBT.*	GO TO STEP 8.
8	MEASURE THE RESISTANCE OF EACH IGBT BETWEEN THEIR RESPECTIVE COLLECTOR TO EMITTER TERMINALS. IS THE MEASURED RESISTANCE LESS THAN 1.0 MEG Ω?	REPLACE THE EFFECTED IGBT.*	GO TO STEP 9.
9	MEASURE THE RESISTANCE OF EACH IGBT FROM THEIR COLLECTOR TO GATE TERMINALS WITH THE MOTOR LEADS ATTACHED. IS THE RESISTANCE APPROXIMATELY 554 KΩ?	REPLACE THE FAILED IGBT.*	GO TO STEP 10.
10	WITH THE MOTOR LEADS OFF, IS THE RESISTANCE APPROXIMATELY 885 KΩ?	REPLACE THE FAILED IGBT.*	CALL EPIC HOT LINE.*
11	PROBE THE MOTHER BOARD ± 15VDC PADS AND RTN FOR VOLTAGE. IS THE PROPER VOLTAGE PRESENT (±10%)?	REPLACE THE FAILED IGBT.*	GO TO STEP 12.
12	DISCONNECT THE PCA C5 CONNECTOR AND INSTALL A NEW APC/LVPS BOARD. REATTACH THE PCA C5 CONNECTOR AND RETEST. DOES THE SCAN TOOL STILL SHOW AN OPEN?	GO TO STEP 13.	REPAIR SUCCESSFUL.*
13	REMOVE THE IGBT DRIVE CONNECTOR ON THE GATE DRIVE OF THE REPORTED OPEN IGBT. INSTALL THE (MOLEX 14−56−2073) PROBING TOOL AND PROBE BETWEEN THE GATE DRIVE BOARD PINS 3 AND 4 AND BETWEEN 6 AND 7 FOR 15VDC. PLACE THE KEY IN THE RUN POSITION. IS 15VDC PRESENT?	REPLACE THE IGBT AT THAT POSITION IN THE BRIDGE.*	REPLACE THE GATE DRIVE BOARD.*

***Perform Verification TEST VER-1A. **Check connectors - Clean/repair as necessary.**

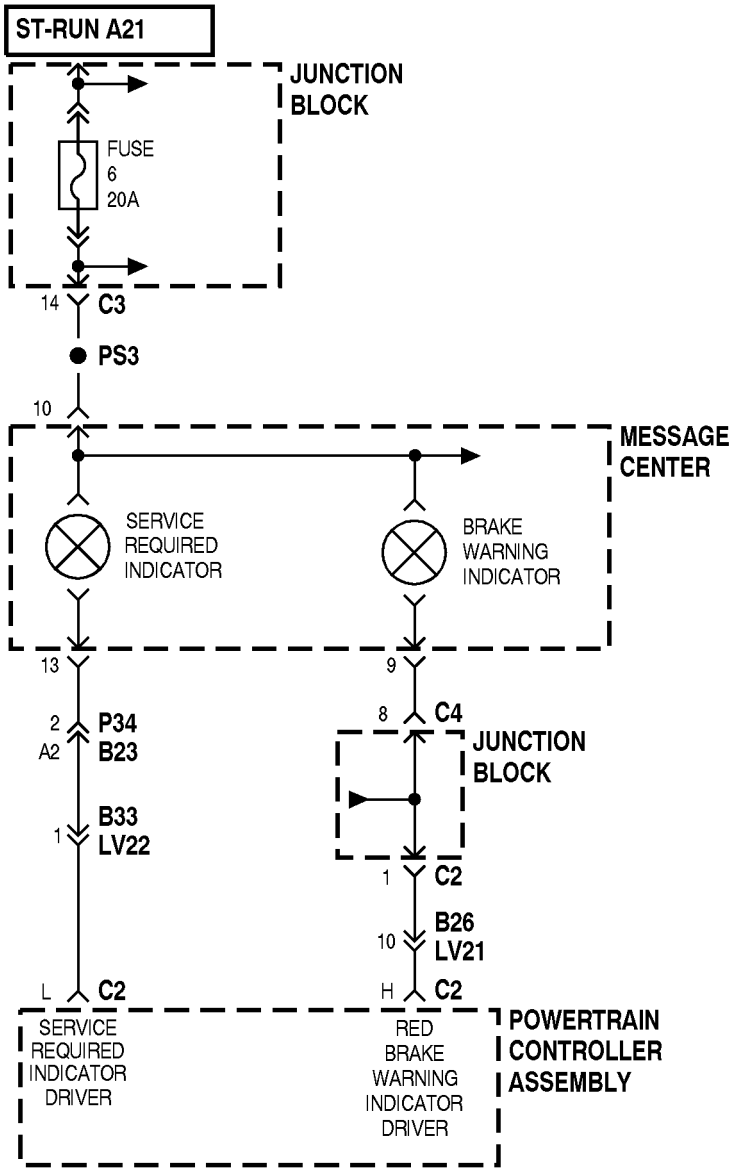

TEST 16 – LAMP DRIVER FAULT

Description: During power–on, the lamps are checked by turning on each lamp individually and checking if a fault is detected. The quad lamp drivers have fault circuitry built into them.

Detection: When the key is in the RUN position, the “SERVICE REQUIRED” and “BRAKE” bulbs are checked. A lamp driver fault is detected during the power–on built–in–test (BIT).

Related Symptoms: Warning lamps will not illuminate if a vehicle failure has occurred.

Possible Causes: The following are possible causes for the LAMP DRIVER FAULT:

- A lamp is burned out or missing
- CVC driver failure
- Interconnection failure

TEST 16 – LAMP DRIVER FAULT

STEP	ACTION	YES	NO
1	HAS TEST 1 BEEN COMPLETED? **NOTE: REFER TO THE PCA – INTERNAL FOLD – OUT SCHEMATIC FOR THE FOLLOWING PROCEDURE.**	GO TO STEP 2.	PERFORM TEST 1.
2	TURN THE KEY TO RUN, USE THE SCAN TOOL TO INDIVIDUALLY ILLUMINATE THE CVC DRIVEN LAMPS: BRAKE AND SERVICE REQUIRED. DO ALL OF THE LAMPS ILLUMINATE WHEN COMMANDED?	REPLACE CVC BOARD.*	CHECK BULB. IF LAMP IS OK, PROCEED TO STEP 3.
3	TURN VEHICLE OFF. DISCONNECT PCA C5 AND C1 CONNECTORS. OPEN THE PCA AND REPLACE THE CVC BOARD WITH THE CVC I/O PROBING TOOL. DISCONNECT MESSAGE CENTER CONNECTOR.** PROBE FOR CONTINUITY FROM THE MESSAGE CENTER CONNECTOR PINS TO RELATED CVC I/O TOOL PINS. REFER TO THE FOLLOWING CHART: MESSAGE CENTER — CVC I/O BOARD 13 — 10 9 — 13 **MESSAGE CENTER** CAV / COLOR / FUNCTION 9 / GY/BK / RED BRAKE WARNING INDICATOR DRIVER 13 / BK/PK / SERVICE REQUIRED INDICATOR DRIVER 6 1 13 7 IS THE CIRCUIT OPEN ON ANY OF THESE PIN COMBINATIONS?	GO TO STEP 4.	REPLACE CVC BOARD.*
4	DISCONNECT PCA C2 AND PROBE FOR CONTINUITY FROM THE MESSAGE CENTER CONNECTOR PINS TO RELATED PCA C2 PINS. REFER TO THE FOLLOWING CHART: MESSAGE CENTER — PCA C2 13 — L 9 — H **POWERTRAIN CONTROLLER ASSEMBLY -C2** CAV / COLOR / FUNCTION L / BK/PK / SERVICE REQUIRED LAMP INDICATOR DRIVER H / GY/BK / RED BRAKE WARNING INDICATOR DRIVER R A B P C N M L D E F K G J H c IS THE CIRCUIT OPEN ON ANY OF THESE PIN COMBINATIONS?	REPAIR WIRING AS NECESSARY.*	REPLACE THE PCA MOTHER BOARD.*

***Perform Verification TEST VER-1A. **Check connectors - Clean/repair as necessary.**

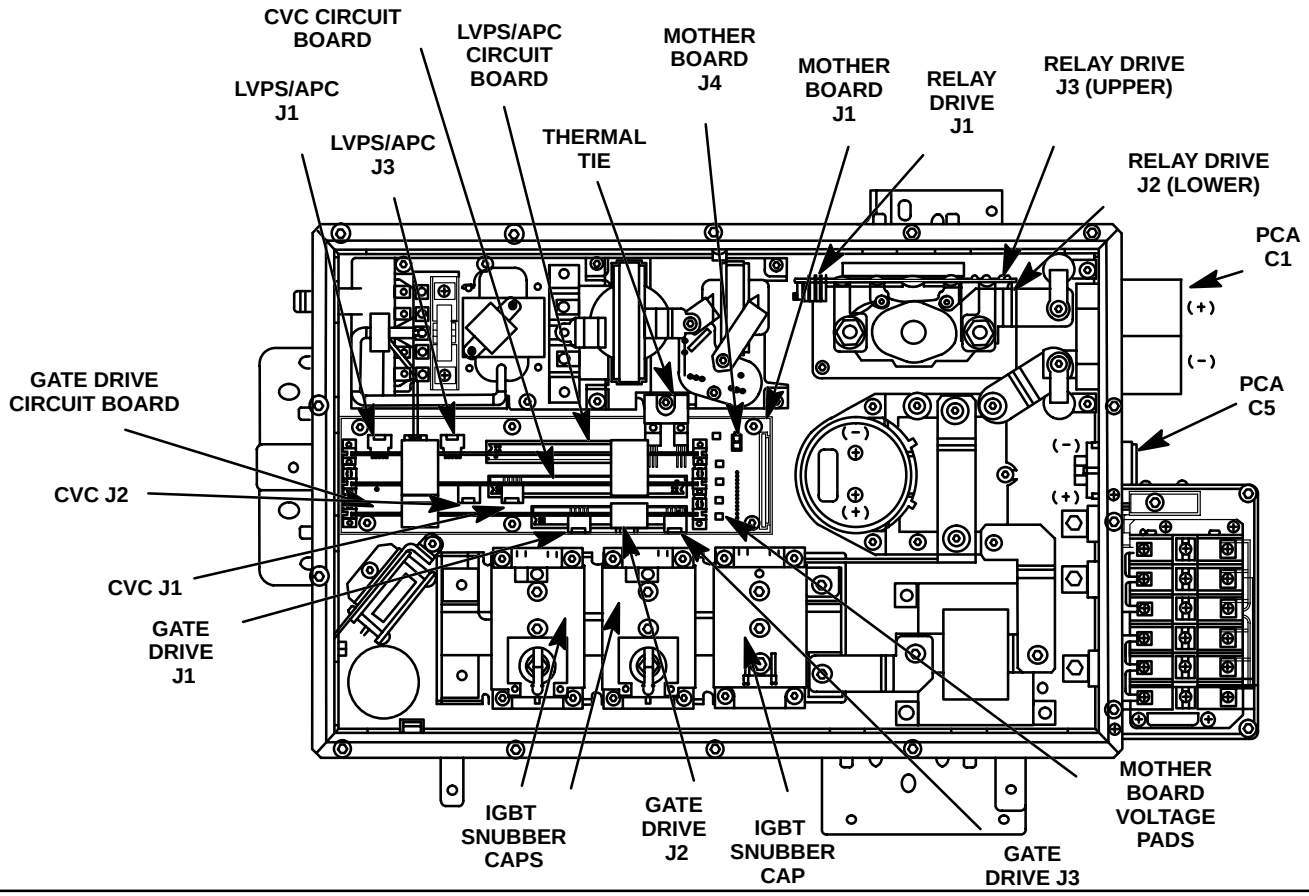

TEST 17 – LINK FAULT ($06)

Description: The PCA link will not discharge for four minutes after the ignition key is turned to the OFF position. If the ignition key is turned on within the four minute period, the safety relay will close and the main relay will remain open. The PCA then checks for the below conditions (see Detection). If any are met, the precharge relay is opened and the vehicle is disabled.

WARNING LAMP: THE "SERVICE REQUIRED" LAMP WILL BE ILLUMINATED.

Detection: When the key is in the RUN position and within four minutes after the ignition key had been turned off after a successful start. If one of the following conditions exists while the precharge relay is closed, the safety is closed and the main relay is open:

- Link voltage does not charge up properly in a predetermined amount of time
- Traction battery voltage does not discharge properly in a predetermined amount of time

Related Symptoms: Vehicle is disabled and will coast to a stop.

Possible causes: The following are possible causes for the LINK FAULT:

- Faulty precharge relay on the relay drive printed circuit board
- There is a short on the link caused by the PCA or an accessory
- The traction battery voltage sense circuit is defective on the relay drive printed circuit board
- The traction battery voltage sense circuit is defective on the CVC printed circuit board
- The link voltage sense circuit is defective on the relay drive printed circuit board
- The link voltage sense circuit is defective on the CVC printed circuit board

TEST 17 – LINK FAULT ($06)

STEP	ACTION	YES	NO
1	HAS TEST 1 BEEN COMPLETED? **NOTE: REFER TO THE PCA–INTERNAL FOLD–OUT SCHEMATIC FOR THE FOLLOWING PROCEDURE.**	GO TO STEP 2.	PERFORM TEST 1.
2	DISABLE THE TRACTION BATTERY PACK BY TURNING THE SERVICE DISCONNECT SWITCH TO OFF. REMOVE PCA COVER. MEASURE THE RESISTANCE BETWEEN THE VLINK (+) AND (–) BUS BARS. IS THE RESISTANCE GREATER THAN 48 Ω?	REPLACE THE RELAY DRIVE ASSEMBLY.*	GO TO STEP 3.
3	IS THE RESISTANCE LESS THAN 32 Ω?	GO TO STEP 4.	GO TO STEP 10.
4	DISCONNECT THE PCA C4 AND REPEAT STEP 3. IS THE RESISTANCE GREATER THAN 32 Ω?	GO TO STEP 15.	GO TO STEP 5.
5	REATTACH THE PCA C4 CONNECTOR AND REMOVE THE (–) BUS BAR AT THE L1 INDUCTOR TO THE IGBT (–) BUS BAR. PROBE THE CAPACITOR. IS THE RESISTANCE GREATER THAN 32 Ω?	GO TO STEP 6.	REPLACE THE CAPACITOR.*
6	REMOVE ALL THREE IGBT SNUBBER CAPS (KEEPING THEM WITH THEIR RESPECTIVE IGBT). MEASURE THE CAPACITANCE OF EACH SNUBBER CAP. IS THE CAPACITANCE EQUAL TO 52 µf ± 10 µf ?	GO TO STEP 7.	REPLACE THE FAILED SNUBBER CAP AND ITS RELATED IGBT*
7	DISCONNECT THE DRIVE CONNECTORS FROM THE GATE DRIVE BOARD TO EACH IGBT AND MEASURE THE CAPACITANCE BETWEEN THE GATE AND EMITTER TERMINALS OF THE IGBT'S. IS THE CAPACITANCE LESS THAN 0.59 µf?	REPLACE THE EFFECTED IGBT.*	GO TO STEP 8.
8	MEASURE THE RESISTANCE OF EACH IGBT FROM THEIR COLLECTOR TO EMITTER TERMINALS. IS THE RESISTANCE LESS THAN 1.0 MEG Ω?	REPLACE THE EFFECTED IGBT.*	GO TO STEP 9.
9	MEASURE THE RESISTANCE OF EACH IGBT FROM THE COLLECTOR TO GATE TERMINALS. IS THE RESISTANCE APPROXIMATELY 554 KΩ WITH THE MOTOR LEADS ATTACHED OR APPROXIMATELY 885 KΩ WITH THE MOTOR LEADS OFF?	REPLACE THE FAILED IGBT.*	GO TO STEP 10.
10	DISCONNECT THE RELAY DRIVE ASSEMBLY J1 CONNECTOR AND SET THE KEY TO RUN. INSERT THE PROBING TOOL (MOLEX 70543–0019) ON TO THE HARNESS CONNECTOR. TOUCH THE PROBE LABELED "BATV" TO THE PAD ON THE MOTHERBOARD LABELED "5V". USING THE SCAN TOOL, READ LINK VOLTAGE. DOES THE SCAN TOOL READ 500VDC?	GO TO STEP 11.	GO TO STEP 12.
11	TOUCH THE PROBE LABELED "BATV" TO THE PAD ON THE MOTHERBOARD LABELED "RTN". USING THE SCAN TOOL, READ LINK VOLTAGE. DOES THE SCAN TOOL READ 0.0VDC?	REPLACE RELAY DRIVE ASSEMBLY.*	GO TO STEP 12.
12	DISCONNECT THE MOTHER BOARD J1 CONNECTOR.* INSERT THE MOTHERBOARD–PROBING TOOL (MOLEX 14–56–2253) INTO THE CONNECTOR ON THE MOTHERBOARD. TOUCH THE PROBE LABELED "BATV" TO THE PAD ON THE MOTHERBOARD LABELED "5V". USING THE SCAN TOOL, READ LINK VOLTAGE. DOES THE SCAN TOOL READ 500VDC?	GO TO STEP 13.	GO TO STEP 14.
13	TOUCH THE PROBE LABELED "BATV" TO THE PAD ON THE MOTHERBOARD LABELED "RTN". DOES THE SCAN TOOL READ 0.0VDC?	REPLACE THE A2A1 CABLE ASSEMBLY.*	GO TO STEP 14.

***Perform Verification TEST VER-1A. **Check connectors - Clean/repair as necessary.**

TEST 17 – LINK FAULT ($06)

STEP	ACTION	YES	NO
14	DISCONNECT PCA C5 CONNECTOR AND REPLACE THE CVC BOARD WITH THE CVC I/O PROBING TOOL. PROBE FROM THE MOTHER BOARD J1 PIN 22 TO CVC I/O PROBING TOOL PIN 72 FOR CONTINUITY. IS THIS CIRCUIT OPEN OR SHORTED?	REPLACE THE MOTHER BOARD.*	REPLACE THE CVC BOARD.*
15	REMOVE POWER STEERING FUSE. REPLACE COVER ON PDB. REPLACE COVER ON PCA. CLEAR LINK FAULT CODE. PERFORM NECESSARY STEPS TO ATTEMPT TO START VEHICLE. DOES VEHICLE START?	GO TO STEP 16.	GO TO STEP 17.
16	DISABLE TRACTION BATTERY PACK BY TURNING THE SERVICE DISCONNECT SWITCH TO OFF. DISCONNECT AND ISOLATE THE AUXILIARY BATTERY NEGATIVE CABLE. REMOVE POWER STEERING PUMP/MOTOR/CONTROLLER (PMC) HIGH VOLTAGE CONNECTOR.** REMOVE PCA C4.** USING AN OHMMETER, MEASURE THE RESISTANCE BETWEEN PCA C4 PINS P AND R. POWERTRAIN CONTROLLER ASSEMBLY – C4 CAV / COLOR / FUNCTION B / DG / A/C COMPRESSOR SUPPLY C / DG/WT / A/C COMPRESSOR RETURN P / OR / POWER STEERING SUPPLY R / OR/WT / POWER STEERING RETURN T / VT / OIL PUMP SUPPLY U / VT/WT / OIL PUMP RETURN 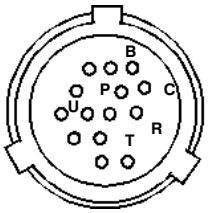 IS THE CIRCUIT OPEN?	REPLACE POWER STEERING PUMP/MOTOR/ CONTROLLER.*	REPAIR SHORT CIRCUIT CONDITION BETWEEN THE HV+ AND HV– WIRES.*
17	DISABLE TRACTION BATTERY PACK BY TURNING THE SERVICE DISCONNECT SWITCH TO OFF. DISCONNECT AND ISOLATE THE AUXILIARY BATTERY NEGATIVE CABLE. REMOVE COVER TO PCA. REPLACE POWER STEERING FUSE. REMOVE OIL PUMP FUSE. REPLACE COVER ON PDB. REPLACE COVER ON PCA. CLEAR LINK FAULT CODE. PERFORM NECESSARY STEPS TO ATTEMPT TO START VEHICLE. DOES VEHICLE START? IS THE CIRCUIT OPEN?	GO TO STEP 18.	GO TO STEP 19.

***Perform Verification TEST VER-1A. **Check connectors - Clean/repair as necessary.**

TEST 17 – LINK FAULT ($06)

STEP	ACTION	YES	NO
18	DISABLE TRACTION BATTERY PACK BY TURNING THE SERVICE DISCONNECT SWITCH TO OFF. DISCONNECT AND ISOLATE THE AUXILIARY BATTERY NEGATIVE CABLE. REMOVE OIL PUMP HIGH VOLTAGE CONNECTOR.** REMOVE PCA C4.** USING AN OHMMETER, MEASURE THE RESISTANCE BETWEEN PCA C4 PINS T AND U. POWERTRAIN CONTROLLER ASSEMBLY – C4 CAV / COLOR / FUNCTION B / DG / A/C COMPRESSOR SUPPLY C / DG/WT / A/C COMPRESSOR RETURN P / OR / POWER STEERING SUPPLY R / OR/WT / POWER STEERING RETURN T / VT / OIL PUMP SUPPLY U / VT/WT / OIL PUMP RETURN 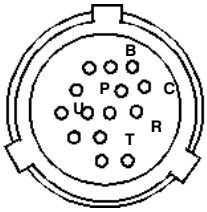 	REPLACE OIL PUMP.*	REPAIR SHORT CIRCUIT CONDITION BETWEEN THE HV+ AND HV– WIRES.*
19	DISABLE TRACTION BATTERY PACK BY TURNING THE SERVICE DISCONNECT SWITCH TO OFF. DISCONNECT AND ISOLATE THE AUXILIARY BATTERY NEGATIVE CABLE. REMOVE COVER TO PCA. REPLACE OIL PUMP FUSE. REMOVE A/C COMPRESSOR FUSE. REPLACE COVER ON PDB. REPLACE COVER ON PCA. CLEAR LINK FAULT CODE. PERFORM NECESSARY STEPS TO ATTEMPT TO START VEHICLE. DOES VEHICLE START?	GO TO STEP 20.	CHECK FAULT CODES FROM OTHER VEHICLE SYSTEMS. IF VEHICLE STILL DOES NOT START, CALL EPIC HOT LINE.*
20	DISABLE TRACTION BATTERY PACK BY TURNING THE SERVICE DISCONNECT SWITCH TO OFF. DISCONNECT AND ISOLATE THE AUXILIARY BATTERY NEGATIVE CABLE. REMOVE A/C COMPRESSOR CONTROLLER HIGH VOLTAGE CONNECTOR.** REMOVE PCA C4.** USING AN OHMMETER, MEASURE THE RESISTANCE BETWEEN PCA C4 PINS B AND C. POWERTRAIN CONTROLLER ASSEMBLY – C4 CAV / COLOR / FUNCTION B / DG / A/C COMPRESSOR SUPPLY C / DG/WT / A/C COMPRESSOR RETURN P / OR / POWER STEERING SUPPLY R / OR/WT / POWER STEERING RETURN T / VT / OIL PUMP SUPPLY U / VT/WT / OIL PUMP RETURN 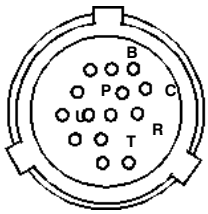 IS THE CIRCUIT OPEN?	REPLACE A/C COMPRESSOR CONTROLLER.*	REPAIR SHORT CIRCUIT CONDITION BETWEEN THE HV+ AND HV– WIRES.*

***Perform Verification TEST VER-1A. **Check connectors - Clean/repair as necessary.**

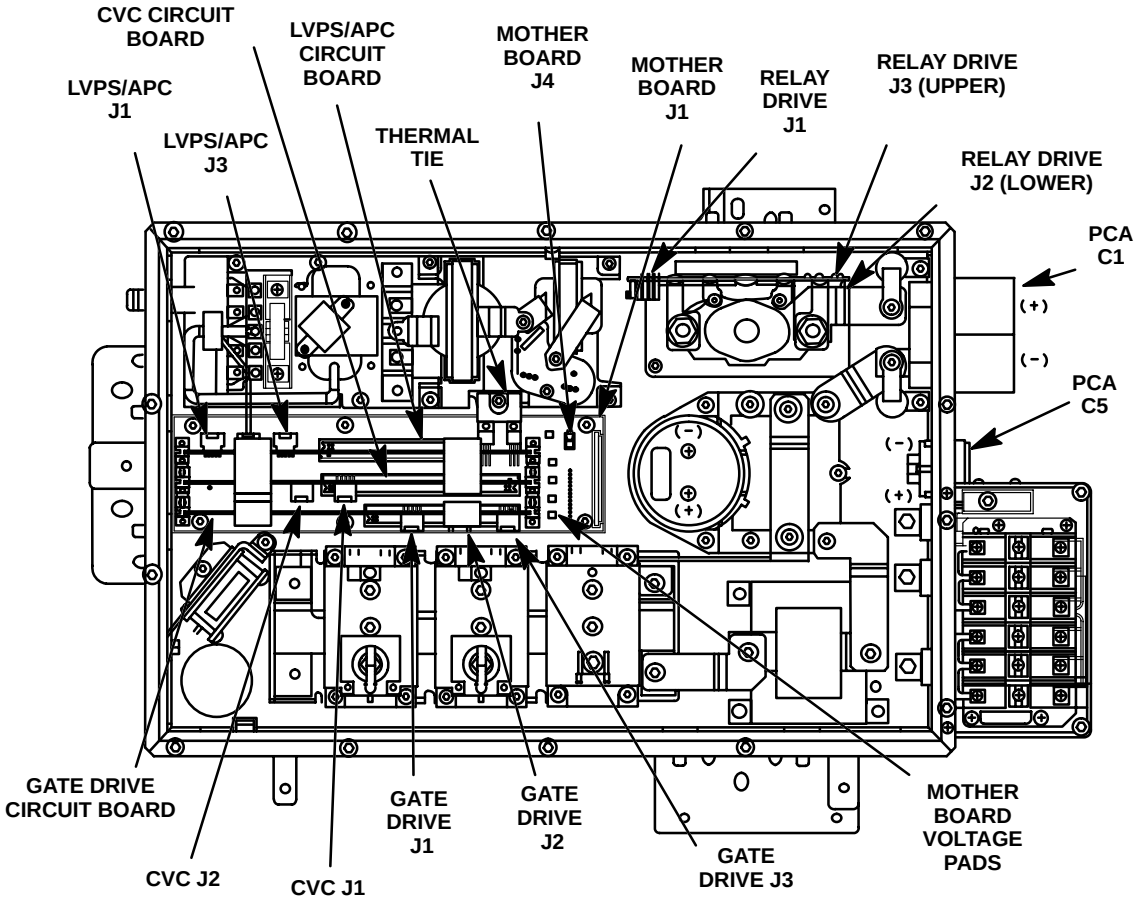

TEST 18 – LINK–VOLTS OUT OF RANGE ($23)

Description: The CVC senses the traction battery voltage at two points inside the PCA. One point, traction battery voltage, is at the PCA C1 connector which comes directly from the traction batteries via the safety relays. The other point, link voltage, is after the main relay inside the PCA. If the difference between these two voltages becomes too large, the CVC requests the BEMS™ to open the safety relay and then the CVC opens the main relay.

WARNING LAMP: THE "SERVICE REQUIRED" LAMP WILL BE ILLUMINATED.

Detection: When the ignition key is in the RUN position. The difference between the link voltage and the traction battery voltage is greater than 10 volts.

Related Symptoms: Vehicle will not enter READY mode. If the failure occurred during driving, the READY display will be extinguished, the vehicle will be disabled and will coast to a stop.

Possible Causes: The following are possible causes for the LINK–VOLTS OUT OF RANGE FAULT:

- Faulty traction battery voltage sense circuit on CVC printed circuit board
- Faulty link voltage sense circuit
- Faulty main relay assembly

TEST 18 – LINK–VOLTS OUT OF RANGE ($23)

STEP	ACTION	YES	NO
1	HAS TEST 1 BEEN COMPLETED? **NOTE: REFER TO THE PCA–INTERNAL FOLD–OUT SCHEMATIC FOR THE FOLLOWING PROCEDURE.**	GO TO STEP 2.	PERFORM TEST 1.
2	REMOVE PCA COVER. DISCONNECT THE RELAY DRIVE ASSEMBLY J1 CONNECTOR. INSERT THE PROBING TOOL (MOLEX 70543–0019) ON TO THE HARNESS CONNECTOR. TOUCH THE PROBE LABELED “BATV” TO THE PAD ON THE MOTHERBOARD LABELED “5V”. TOUCH THE PROBE LABELED “BATV” TO THE PAD ON THE MOTHERBOARD LABELED “RTN”. SET KEY TO RUN. SET SCAN TOOL TO READ, FIRST TRACTION BATTERY VOLTAGE, AND THEN LINK VOLTAGE. DOES THE SCAN TOOL READ 5OOVDC FOR BOTH?	GO TO STEP 3.	GO TO STEP 4.
3	SHORT PIN 14 (TRACTION VOLTAGE) AND THEN PIN 15 (LINK VOLTAGE) IN THE J1 CABLE TO CHASSIS GROUND. DOES THE SCAN TOOL READ 0.0 VDC FOR EACH VOLTAGE?	REPLACE THE RELAY DRIVE ASSEMBLY.*	GO TO STEP 4.
4	DISCONNECT THE MOTHER BOARD J1 CONNECTOR. INSERT THE MOTHERBOARD–PROBING TOOL (MOLEX 14–56–2253) INTO THE CONNECTOR ON THE MOTHERBOARD. TOUCH THE PROBE LABELED “BATV” TO THE PAD ON THE MOTHERBOARD LABELED “5V”. TOUCH THE PROBE LABELED “BATV” TO THE PAD ON THE MOTHERBOARD LABELED “RTN”. DO BOTH TESTS PASS NOW?	REPLACE THE A2A1 CABLE ASSEMBLY.*	GO TO STEP 5.
5	DISCONNECT THE PCA C5 CONNECTOR AND REPLACE THE CVC BOARD WITH THE CVC I/O PROBING TOOL. PROBE FROM MOTHER BOARD J1 PIN 21/22 TO I/O PROBING TOOL PIN 74/72 FOR CONTINUITY. ARE THESE CIRCUITS OPEN OR SHORTED TO GROUND?	REPLACE THE MOTHER BOARD.*	REPLACE THE CVC BOARD.*

***Perform Verification TEST VER-1A. **Check connectors - Clean/repair as necessary.**

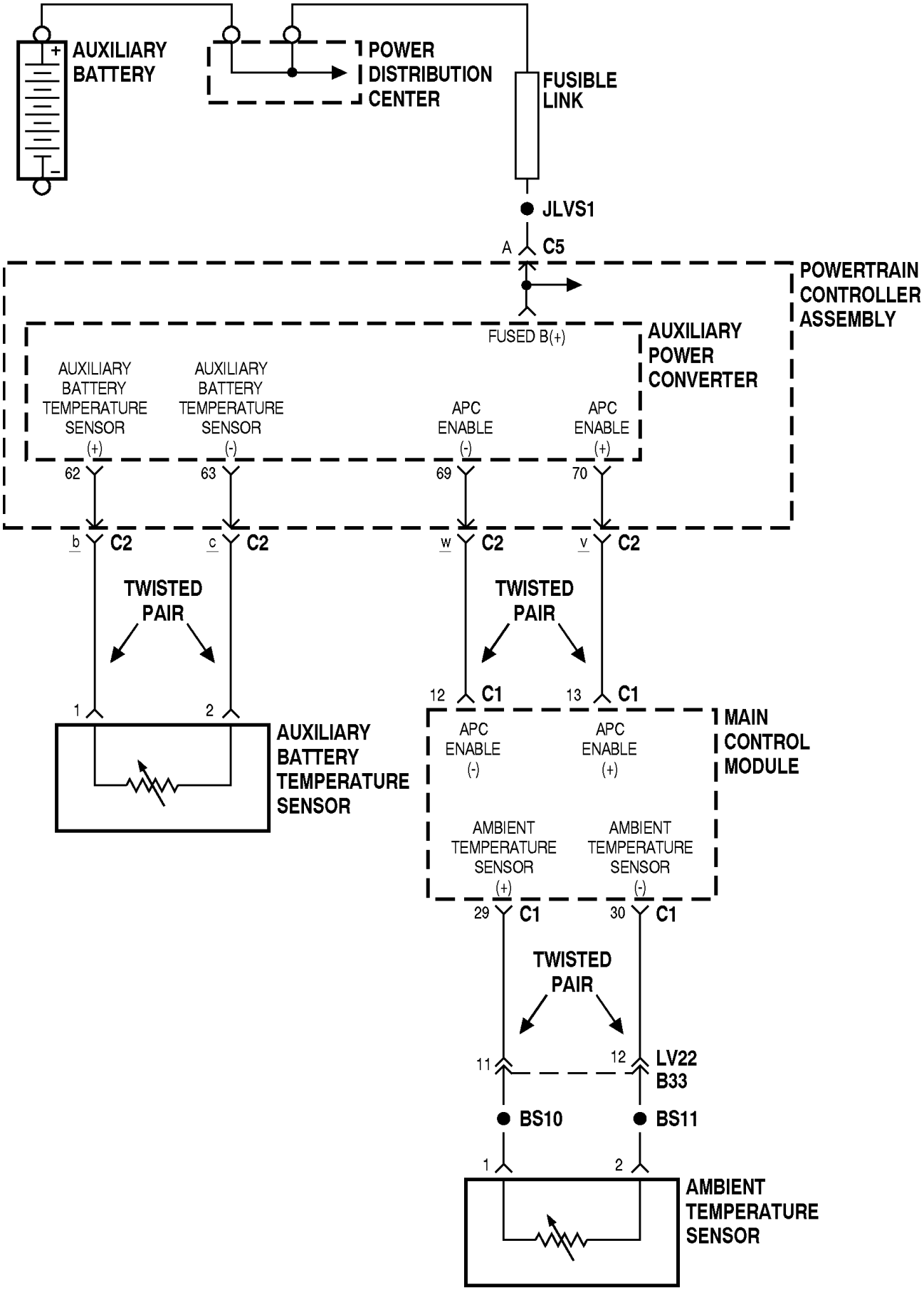
AUXILIARY BATTERY
POWER DISTRIBUTION CENTER
FUSIBLE LINK
JLVS1
A C5
POWERTRAIN CONTROLLER ASSEMBLY
FUSED B(+)
AUXILIARY POWER CONVERTER
AUXILIARY BATTERY TEMPERATURE SENSOR (+)
AUXILIARY BATTERY TEMPERATURE SENSOR (-)
APC ENABLE (-)
APC ENABLE (+)
62
63
69
70
b C2
c C2
w C2
v C2
TWISTED PAIR
TWISTED PAIR
12 C1
13 C1
1
2
AUXILIARY BATTERY TEMPERATURE SENSOR
MAIN CONTROL MODULE
APC ENABLE (-)
APC ENABLE (+)
AMBIENT TEMPERATURE SENSOR (+)
AMBIENT TEMPERATURE SENSOR (-)
29 C1
30 C1
TWISTED PAIR
11
12
LV22 B33
BS10
BS11
1
2
AMBIENT TEMPERATURE SENSOR

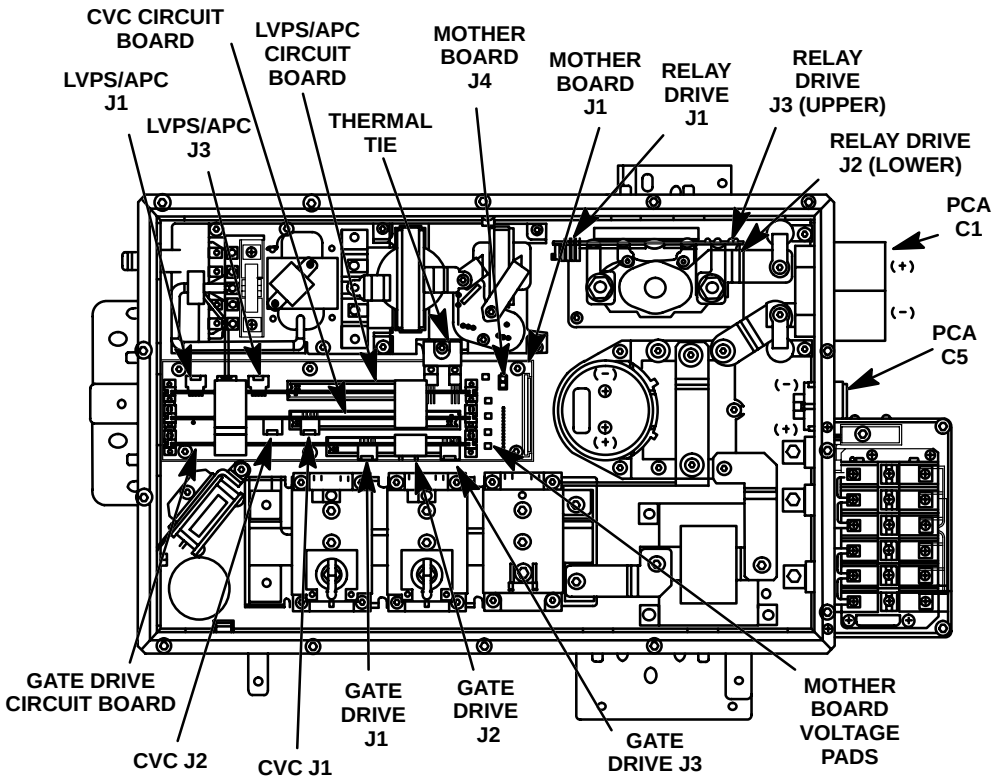

TEST 19 – LOW AUXILIARY BATTERY/AUX BATT TEMP/VOLT ($20), ($37)

Description: The BEMS™ senses auxiliary battery voltage and sends the value to the CVC via the CCD bus.

WARNING LAMP: THE "BATTERY LOW" LAMP WILL BE ILLUMINATED.

Detection: When the ignition key is in the RUN position. The auxiliary battery voltage is less than 10.0V

Related Symptoms: Vehicle will not enter READY mode. If the failure occurred during driving, the READY display will be turned OFF. The vehicle will be disabled and coast to a stop.

Possible Causes: The following are possible causes for the LOW AUXILIARY BATTERY FAULT:

- Faulty auxiliary battery voltage sense circuit on the BEMS™
- Failed APC
- Failed auxiliary battery
- Excessive ignition off draw (IOD)
- Failed ambient temperature sensor

AUXILIARY BATTERY THERMISTOR VALUES

°C	°F	MIN	MAX
0°	32°	29.3 KΩ	36 KΩ
10°	50°	18 KΩ	22 KΩ
20°	68°	11.4 KΩ	13.6 KΩ
25°	77°	9.1 KΩ	10.8 KΩ
30°	86°	7.4 KΩ	8.7 KΩ
40°	104°	4.9 KΩ	5.7 KΩ
50°	122°	3.3 KΩ	3.8 KΩ

TEST 19 – LOW AUXILIARY BATTERY/AUX BATT TEMP/VOLT ($20), ($37)

STEP	ACTION	YES	NO
1	HAS TEST 1 BEEN COMPLETED? **NOTE: REFER TO THE PCA–INTERNAL FOLD–OUT SCHEMATIC FOR THE FOLLOWING PROCEDURE.**	GO TO STEP 2.	PERFORM TEST 1.
2	IS THE BEMS™ DTC "AMBIENT TEMPERATURE FAULT" PRESENT?	REFER TO BEMS DIAGNOTICS SECTION IN THIS MANUAL.*	GO TO STEP 3.
3	REFER TO THE STANDARD NS SERVICE MANUAL SECTION 8A AND PERFORM THE IOD TEST AND BATTERY PERFORMANCE TEST. AFTER 5 MINUTES, IS THE IOD GREATER THAN 100mA?	CALL EPIC HOT LINE.*	GO TO STEP 4.
4	USING A VOLTMETER, MEASURE AND RECORD AUXILIARY BATTERY VOLTAGE WITH THE VEHICLE TURNED OFF. PLACE IN VEHICLE IN READY MODE. USING A VOLTMETER, MEASURE AND RECORD AUXILIARY BATTERY VOLTAGE. DID VOLTAGE INCREASE BY AT LEAST 1.0 V?	GO TO STEP 5.	GO TO STEP 6.
5	USING THE CHART ON THE PREVIOUS PAGE OF THIS TEST, COMPARE VOLTMETER AUXILIARY BATTERY MEASUREMENT WITH THE FOLLOWING CHART: TEMP °F / VOLTAGE 20 / 14.55V (+/–0.25V) 40 / 14.30V (+/–0.25V) 70 / 13.95V (+/–0.25V) 100 / 13.60V (+/–0.25V) 120 / 13.50V (+/–0.25V) IS THE VOLTAGE WITHIN +/– 1.0V?	REPAIR SUCCESSFUL.*	GO TO STEP 10.
6	TURN SERVICE DISCONNECT SWITCH TO OFF. REMOVE PCA COVER. REMOVE LVPS/APC BOARD J1 CONNECTOR.** MEASURE RESISTANCE BETWEEN PINS 1 AND 2 AND BETWEEN PINS 4 AND 5. LVPS/APC – J1 1 ☐ ☐ ☐ ☐ ☐ 5 IS THE RESISTANCE LESS THAN 500KΩ?	REPLACE APC POWER STAGE ASSEMBLY.*	GO TO STEP 7.
7	REPLACE LVPS/APC BOARD WITH THE LVPS/APC I/O PROBING TOOL. CONNECT VOLTMETER BETWEEN THE APC ENABLE PIN 70 (+) AND APC ENABLE PIN 69 (–) PINS. USING THE SCAN TOOL, GO TO BEMS ACTUATOR TESTS AND ENABLE APC. DOES THE VOLTMETER INDICATE APPROXIMATELY 12V?	REPLACE LVPS/APC BOARD.*	GO TO STEP 8.

***Perform Verification TEST VER-1A. **Check connectors - Clean/repair as necessary.**

TEST 19 – LOW AUXILIARY BATTERY/AUX BATT TEMP/VOLT ($20), ($37)

STEP	ACTION	YES	NO
8	DISABLE THE TRACTION BATTERY PACK BY TURNING THE SERVICE DISCONNECT SWITCH TO OFF. REMOVE MAIN CONTROL MODULE CONNECTOR C1.** USING AN OHMMETER, MEASURE THE RESISTANCE BETWEEN LVPS/APC I/O PROBING TOOL APC (+) PIN 70 AND MCM C1 PIN 13 AND APC (–) ENABLE PIN 69 AND MCM C1 PIN 12. **MAIN CONTROL MODULE – C1** CAV 1 DB FUSED B (+) CAV 12 GY APC ENABLE (–) CAV 13 VT APC ENABLE (+) 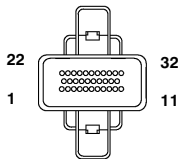 IS THERE CONTINUITY ON BOTH CIRCUITS?	REPLACE MAIN CONTROL MODULE.*	GO TO STEP 9.
9	REMOVE PCA C2.** USING AN OHMMETER, MEASURE THE RESISTANCE BETWEEN PCA C2 PIN W AND MCM C1 PIN 12, AND ALSO BETWEEN PCA C2 PIN V AND MCM C1 PIN 13. **POWERTRAIN CONTROLLER ASSEMBLY –C2** CAV b DG AUXILIARY BATTERY THERMISTOR (+) CAV c BK/RD AUXILIARY BATTERY THERMISTOR (–) CAV v VT APC ENABLE (+) CAV w GY APC ENABLE (–) 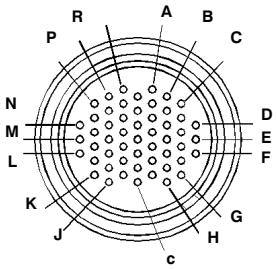 **MAIN CONTROL MODULE – C1** CAV 1 DB FUSED B (+) CAV 12 GY APC ENABLE (–) CAV 13 VT APC ENABLE (+) 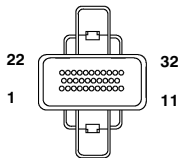 IS THERE CONTINUITY ON BOTH CIRCUITS?	REPLACE MOTHER BOARD.*	REPAIR APC ENABLE CIRCUIT(S).*
10	REMOVE AUXILIARY BATTERY TEMPERATURE SENSOR CONNECTOR.** USING AN OHMMETER, MEASURE THE RESISTANCE INTO THE SENSOR. **AUXILIARY BATTERY THERMISTOR** CAV 1 BK/RD AUXILIARY BATTERY THERMISTOR (–) CAV 2 DG AUXILIARY BATTERY THERMISTOR (+) DOES THE RESISTANCE COMPARE WITH THE AUXILIARY BATTERY TEMPERATURE VS. RESISTANCE CHART ON THE FIRST PAGE OF THIS TEST?	GO TO STEP 11.	REPLACE AUXILIARY BATTERY TEMPERATURE SENSOR.*

***Perform Verification TEST VER-1A. **Check connectors - Clean/repair as necessary.**

TEST 19 – LOW AUXILIARY BATTERY/AUX BATT TEMP/VOLT ($20), ($37)

STEP	ACTION	YES	NO
11	DISCONNECT PCA C2.** USING AN OHMMETER, PROBE BETWEEN PCA C2 PIN B AND AUXILIARY BATTERY TEMPERATURE SENSOR PIN 1 FOR AN OPEN OR SHORT TO GROUND CONDITION. **AUXILIARY BATTERY THERMISTOR** CAV / COLOR / FUNCTION 1 / BK/RD / AUXILIARY BATTERY THERMISTOR (–) 2 / DG / AUXILIARY BATTERY THERMISTOR (+) **POWERTRAIN CONTROLLER ASSEMBLY -C2** CAV / COLOR / FUNCTION b / DG / AUXILIARY BATTERY THERMISTOR (+) c / BK/RD / AUXILIARY BATTERY THERMISTOR (–) IS THERE AN OPEN OR SHORT TO GROUND?	REPAIR AUXILIARY BATTERY TEMPERATURE SENSOR CIRCUIT.*	GO TO STEP 12.
12	REMOVE APC/LVPS BOARD. INSTALL APC/LVPS I/O PROBING TOOL. USING AN OHMMETER, MEASURE THE RESISTANCE BETWEEN PINS 62 AND 63 OF THE PROBING TOOL. DOES THE RESISTANCE COMPARE WITH THE AUXILIARY BATTERY TEMPERATURE VS. RESISTANCE CHART ON THE FIRST PAGE?	REPLACE APC/LVPS BOARD.*	GO TO STEP 13.
13	USING AN OHMMETER, PROBE BETWEEN PCA C2 PIN C AND AUXILIARY BATTERY TEMPERATURE SENSOR PIN 2 FOR AN OPEN OR SHORT TO GROUND CONDITION. IS THERE AN OPEN OR SHORT TO GROUND?	REPAIR AUXILIARY BATTERY TEMPERATURE SENSOR CIRCUIT.*	REPLACE MOTHER BOARD.*

***Perform Verification TEST VER-1A. **Check connectors - Clean/repair as necessary.**

THIS PAGE INTENTIONALLY LEFT BLANK

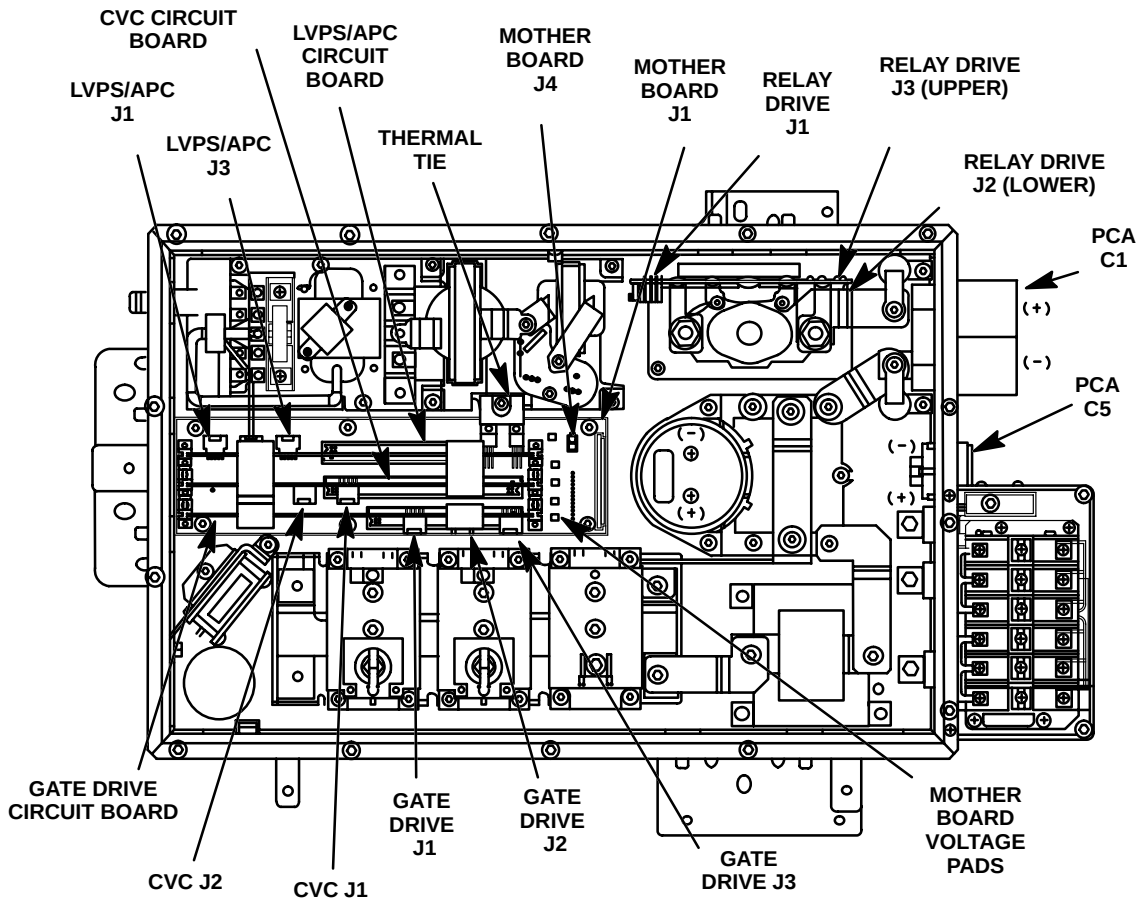

TEST 20 – MAIN RELAY FAILURE

Description: During start–up, after the link is precharged, the PCA waits an additional 502 milliseconds and then closes the main relay. The PCA then pulses the IGBT's to draw current from the traction battery. After 218 milliseconds, the PCA checks the voltage difference between the link and the traction battery and disables the IGBT's. If the difference is greater than 10V the vehicle is disabled.

WARNING LAMP: THE "SERVICE REQUIRED" LAMP WILL BE ILLUMINATED.

Detection: When the ignition key is in the START position. The main relay is closed, and the difference between the link voltage and the traction battery voltage is greater than 10V while current is being drawn from the traction battery.

Related Symptoms: Vehicle will not enter READY mode.

Possible causes: The following are possible causes for the MAIN RELAY FAILURE FAULT:

- Loss of 12V connection.
- Faulty main relay on the relay drive printed circuit board.
- The traction battery voltage sense circuit is defective on the relay drive printed circuit board.
- The traction battery voltage sense circuit is defective on the CVC printed circuit board.
- The link voltage sense circuit is defective on the relay drive printed circuit board.
- The link voltage sense circuit is defective on the CVC printed circuit board.

TEST 20 – MAIN RELAY FAILURE

STEP	ACTION	YES	NO
1	HAS TEST 1 BEEN COMPLETED? **NOTE: REFER TO THE PCA–INTERNAL FOLD–OUT SCHEMATIC FOR THE FOLLOWING PROCEDURE.**	GO TO STEP 2.	PERFORM TEST 1.
2	DISCONNECT THE PCA C1 CONNECTOR AND OPEN THE PCA. DISCONNECT THE RELAY DRIVE ASSEMBLY J1 CONNECTOR.** SET THE KEY TO RUN. USING A VOLTMETER, MEASURE FROM RELAY DRIVE ASSEMBLY J1 PIN 10 TO PIN 17 USING (MOLEX 70543–0019) TEST PROBING TOOL. IS 0.0VDC PRESENT?	REPLACE RELAY DRIVE BOARD.*	GO TO STEP 3.
3	TURN THE KEY OFF. REMOVE THE PCA C5 CONNECTOR AND REMOVE THE CVC BOARD. INSTALL THE CVC I/O TEST PROBING TOOL. USING AN OHMMETER, CHECK FOR CONTINUITY FROM RELAY DRIVE ASSEMBLY J1 CABLE PIN 10 TO CVC I/O PROBING TOOL PIN 33 AND FROM RELAY DRIVE ASSEMBLY J1 PIN 17 TO CVC I/O TOOL PIN 23. IS CONTINUITY PRESENT?	INSTALL A NEW CVC BOARD.*	GO TO STEP 4.
4	REMOVE THE MOTHER BOARD J1 CONNECTOR AND REPLACE WITH THE (MOLEX 14–56–2253) PROBING TOOL. USING AN OHMMETER, CHECK FOR CONTINUITY FROM MOTHER BOARD J1 CONNECTOR PIN 18 TO CVC I/O PROBING TOOL PIN 33 AND FROM MOTHER BOARD J1 PIN 24 TO CVC I/O TOOL PIN 23. IS CONTINUITY PRESENT?	INSTALL A NEW A2A1 CABLE ASSEMBLY.*	INSTALL A NEW PCA MOTHER BOARD.*

***Perform Verification TEST VER-1A. **Check connectors - Clean/repair as necessary.**

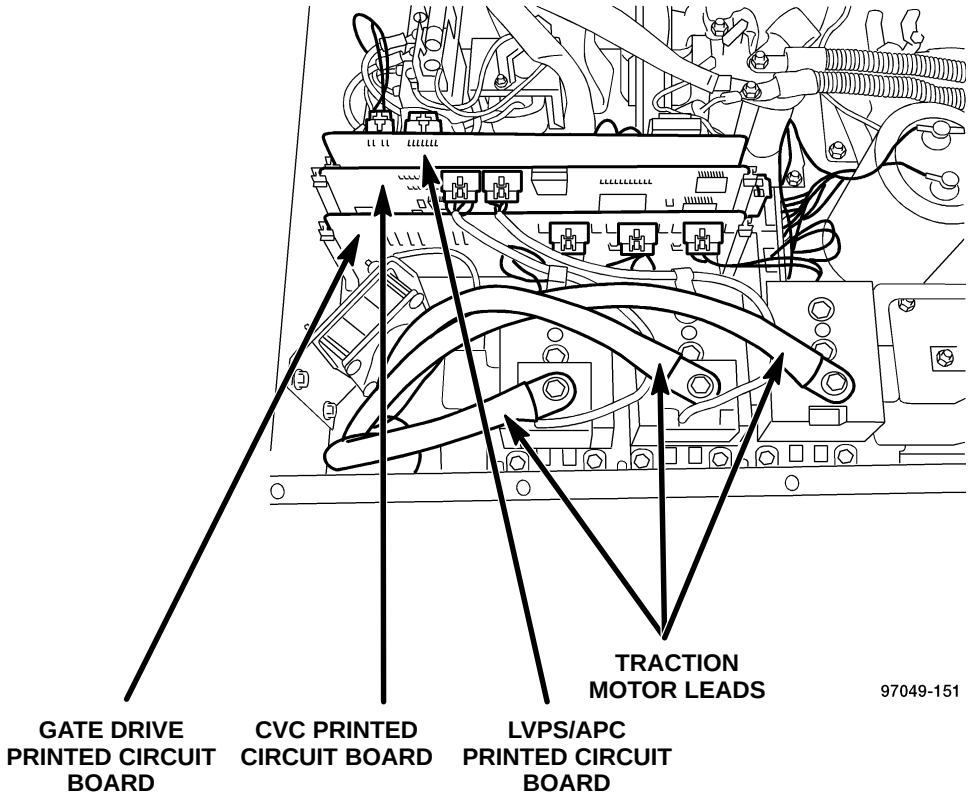

TEST 21 – MAX OVERCURRENT ($22)

Description: One feedback for the control of the traction motor is to sense the current in the motor leads. This is accomplished using current sensors on two of the motor leads. Since the sum of the three currents always equals zero, the current in the third motor lead is calculated. The output of the current sensors is a voltage that is sent to the CVC. There is also a circuit that looks at the voltage output from the current sensors and compares it to two voltage references, representing the maximum positive and negative current thresholds. If either of the thresholds are met two times within one second, the vehicle is disabled.

WARNING LAMP: THE "SERVICE REQUIRED" LAMP WILL BE ILLUMINATED.

Detection: When the ignition key is in the RUN position. The CVC has detected a motor lead current level greater than +585 amps or less than –585 amps two times within one second.

Related Symptoms: Vehicle will not enter READY mode. If the failure occurred during driving, the READY display will be extinguished. The vehicle will be disabled and coast to a stop.

Possible Causes: The following are possible causes for the MAX OVERCURRENT FAULT:

- Faulty overcurrent detection circuit on CVC board
- Faulty current sensor
- Resolver fault
- Shorted motor winding

TEST 21 – MAX OVERCURRENT ($22)

STEP	ACTION	YES	NO
1	HAS TEST 1 BEEN COMPLETED?	GO TO STEP 2.	PERFORM TEST 1
2	ARE PCA DTC'S "R/D LOSS FAULT" OR "RESOLVER COUNT FAILURE" PRESENT?	REPAIR OTHER PCA DTC'S FIRST.*	GO TO STEP 3.
3	ARE THE IGBT TO TRACTION MOTOR LEADS TORQUED TO 8 N·M (72 IN. LB.), AND ARE THE MOTOR, APC AND CURRENT SENSOR LEADS ROUTED PROPERLY? 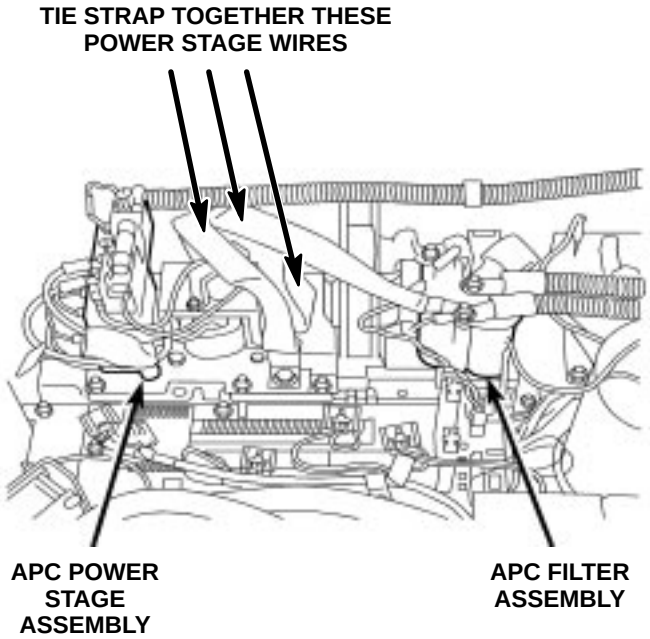	GO TO STEP 4.	REPAIR AS NECESSARY.*
4	PROBE THE A, B, AND C MOTOR LEADS FROM THE TOP OF THE IGBT'S TO CHASSIS GROUND FOR A SHORT. IS THERE A SHORT PRESENT?	REPLACE THE TRACTION MOTOR.*	GO TO STEP 5.
5	WAS ERRATIC SPEEDOMETER OPERATION REPORTED?	REFER TO PCA CODE "R/D LOSS FAULT" DIAGNOSTICS IN THIS SECTION.*	GO TO STEP 6.
6	RESTORE VEHICLE TO FULL RUNNING CONDITION AND ROAD TEST. IS FAULT CODE "MAX OVERCURRENT" STILL PRESENT?	REFER TO PCA CODE "R/D LOSS FAULT" DIAGNOSTICS IN THIS SECTION.*	REPAIR SUCCESSFUL.*

***Perform Verification TEST VER-1A. **Check connectors - Clean/repair as necessary.**

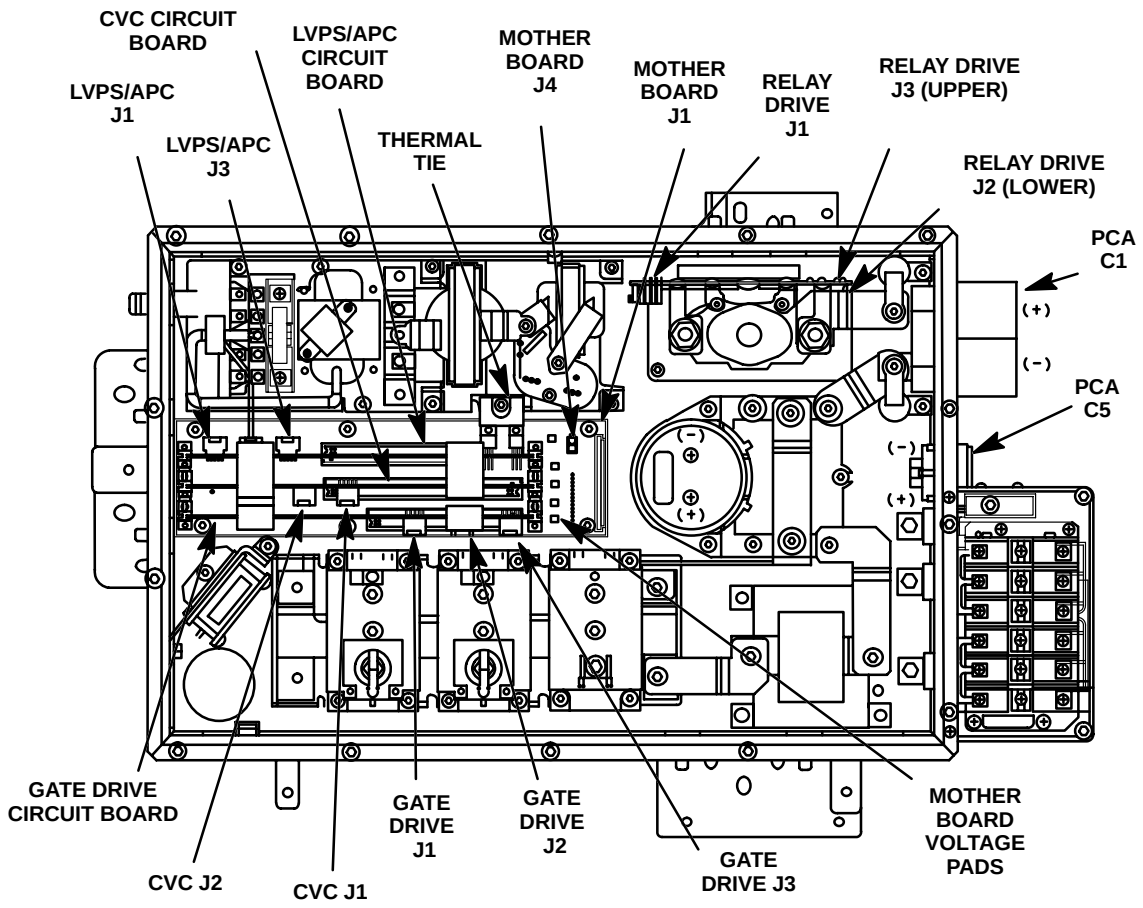

TEST 22 – NEGATIVE 15V FAULT ($34)

Description: The CVC circuit board monitors the –15V power supply output. If the output voltage varies by more than ± 2V, the CVC will disable the vehicle.

WARNING LAMP: THE "SERVICE REQUIRED" LAMP WILL BE ILLUMINATED.

Detection: When the ignition key is in the RUN position. The CVC detects that the –15V power supply output is greater than –13V or less than –17V.

Related Symptoms: Vehicle will not enter READY mode. If the failure occurred during driving, the READY display will be turned OFF. The vehicle will be disabled and coast to a stop.

Possible Causes: The following are possible causes for the NEGATIVE 15V FAULT:

- Faulty LVPS/APC printed circuit board
- Faulty CVC printed circuit board

TEST 22 – NEGATIVE 15V FAULT ($34)

STEP	ACTION	YES	NO
1	HAS TEST 1 BEEN COMPLETED? **NOTE: REFER TO THE PCA–INTERNAL FOLD–OUT SCHEMATIC FOR THE FOLLOWING PROCEDURE.**	GO TO STEP 2.	PERFORM TEST 1.
2	DISCONNECT THE PCA C1 CONNECTOR AND OPEN THE PCA. TURN THE KEY TO RUN. PROBE BETWEEN THE MOTHER BOARD (–)15VDC AND RTN PADS FOR PRESENCE OF (–)15VDC ±10%. IS (–)15VDC ±10% PRESENT?	GO TO STEP 4.	GO TO STEP 3.
3	DISCONNECT PCA C5 AND REPLACE THE LVPS/APC BOARD WITH LVPS/APC I/O PROBING TOOL. REPLACE THE CVC BOARD WITH CVC I/O PROBING TOOL. USING AN OHMMETER, CHECK FOR CONTINUITY BETWEEN THE FOLLOWING PINS: APC/LVPS I/O BOARD — CVC I/O BOARD 15 (+15V) — 90 (+15V) 46 (–15V) — 92 (–15V) IS CONTINUITY PRESENT?	GO TO STEP 4.	DISCONNECT C5 AND REPLACE THE MOTHER BOARD THEN GO TO STEP 4.
4	TURN THE KEY OFF. DISCONNECT PCA C5 CONNECTOR. REMOVE THE GATE DRIVE BOARD AND REATTACH THE PCA C5 CONNECTOR. ERASE DTC “NEGATIVE 15V FAULT.” USE SCAN TOOL TO READ DTC’S. TURN KEY TO RUN POSITION. IS DTC “NEGATIVE 15V” STILL PRESENT?	DISCONNECT PCA C5 AND INSTALL A NEW GATE DRIVE BOARD.*	DISCONNECT PCA C5 AND INSTALL A NEW APC/LVPS BOARD.*

***Perform Verification TEST VER-1A. **Check connectors - Clean/repair as necessary.**

TEST 23: NO RESPONSE FROM POWERTRAIN CONTROLLER ASSEMBLY (PCA) ($17)

STEP	ACTION	YES	NO
1	HAS TEST 1 BEEN COMPLETED?	GO TO STEP 2.	PERFORM TEST 1.
2	DISABLE TRACTION BATTERY PACK BY TURNING THE SERVICE DISCONNECT SWITCH TO OFF. DISCONNECT AND ISOLATE THE AUXILIARY BATTERY NEGATIVE CABLE. REMOVE CVC BOARD. INSTALL CVC I/O BOARD. USING AN OHMMETER, PROBE BETWEEN CVC I/O BOARD PIN 81 AND DATA LINK CONNECTOR (DLC) CAVITY 7 FOR AN OPEN OR SHORT TO GROUND. **DATA LINK CONNECTOR** CAV: 7 — COLOR: PK — FUNCTION: PCA SCI TRANSMIT 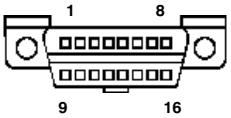 DOES AN OPEN OR SHORT TO GROUND CONDITION EXIST?	GO TO STEP 3.	GO TO STEP 4.
3	REMOVE PCA C4.** USING AN OHMMETER, PROBE BETWEEN PCA C4 PIN E AND DLC CAVITY 7 FOR AN OPEN OR SHORT TO GROUND. **POWERTRAIN CONTROLLER ASSEMBLY -C4** CAV: E — COLOR: PK — FUNCTION: SCI TRANSMIT CAV: H — COLOR: LG — FUNCTION: SCI RECEIVE 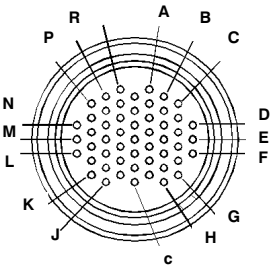 DOES AN OPEN OR SHORT TO GROUND CONDITION EXIST?	GO TO STEP 4.	REPAIR THE SCI TRANSMIT CIRCUIT.*
4	USING AN OHMMETER, PROBE BETWEEN CVC I/O BOARD PIN 82 AND DLC CAVITY 6 FOR AN OPEN OR SHORT TO GROUND. DOES AN OPEN OR SHORT TO GROUND CONDITION EXIST?	GO TO STEP.	REPLACE CVC BOARD.*
5	USING AN OHMMETER, PROBE BETWEEN PCA C4 PIN H AND DLC CAVITY 6 FOR AN OPEN OR SHORT TO GROUND. DOES AN OPEN OR SHORT TO GROUND CONDITION EXIST?	REPAIR THE SCI RECEIVE CIRCUIT.*	REPLACE CVC BOARD.*

***Perform Verification TEST VER-1A. **Check connectors - Clean/repair as necessary.**

TEST 24: NO RESPONSE OVER CCD BUS FROM POWERTRAIN CONTROLLER ASSEMBLY (PCA)

STEP	ACTION	YES	NO
1	HAS TEST 1 BEEN COMPLETED?	GO TO STEP 2.	PERFORM TEST 1.
2	DOES THE VEHICLE ENTER READY MODE?	GO TO STEP 3.	REFER TO PCA DIAGNOSTICS IN THIS MANUAL.
3	DISABLE TRACTION BATTERY PACK BY TURNING THE SERVICE DISCONNECT SWITCH TO OFF. REMOVE PCA CONNECTOR C4. CONNECT A JUMPER WIRE BETWEEN CCD BUS (+) CKT AND GROUND. USING THE SCAN TOOL, PERFORM THE CCD BUS TEST. POWERTRAIN CONTROLLER ASSEMBLY -C4 CAV / COLOR / FUNCTION M1 / VT/BR / CCD BUS (+) S1 / WT/BK / CCD BUS (–) 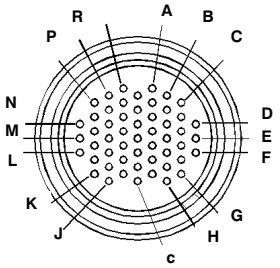 DOES THE SCAN TOOL SHOW “SHORT TO GROUND?”	GO TO STEP 4.	REPAIR THE OPEN CCD BUS (+) CIRCUIT.*
4	CONNECT THE JUMPER WIRE BETWEEN CCD BUS (–) CIRCUIT AND GROUND. USING THE SCAN TOOL, PERFORM THE CCD BUS TEST. DOES THE SCAN TOOL SHOW “SHORT TO GROUND?”	REPLACE CHASSIS VECTOR CONTROLLER (CVC) CIRCUIT BOARD.*	REPAIR THE OPEN CCD BUS (–) CIRCUIT.*

***Perform Verification TEST VER-1A. **Check connectors - Clean/repair as necessary.**

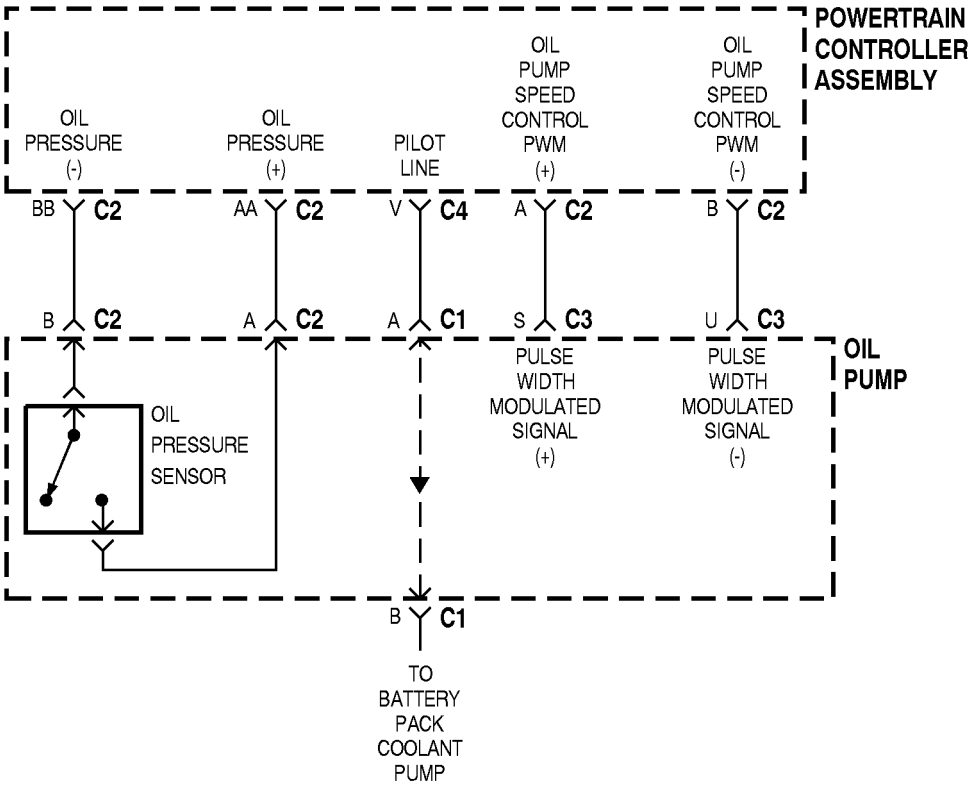

TEST 25 – OIL PRESSURE FAULT ($1E)

Description: The oil pressure switch is monitored once after a successful start. If a low pressure condition exists for three consecutive seconds, the CVC will limit power output while the condition exists. If a low pressure condition exists for 11 consecutive seconds, this DTC will be set.

WARNING LAMP: THE "SERVICE REQUIRED" LAMP WILL BE ILLUMINATED.

Detection: When the ignition key is in the RUN position, after a successful start. The oil pressure switch sensed by the PCA indicates a low pressure condition for 11 consecutive seconds after a successful start.

Related Symptoms: Vehicle will be torque limited or have a sensation of power loss.

Possible Causes: The following are possible causes for the OIL PRESSURE FAULT:

- Faulty oil pump
- Low oil
- Faulty pressure switch
- Interconnection failure

TEST 25 – OIL PRESSURE FAULT ($1E)

STEP	ACTION	YES	NO
1	HAS TEST 1 BEEN COMPLETED? **NOTE: REFER TO THE PCA–INTERNAL FOLD–OUT SCHEMATIC FOR THE FOLLOWING PROCEDURE.**	GO TO STEP 2.	PERFORM TEST 1.
2	IS COOLING OIL AT PROPER LEVEL?	GO TO STEP 4.	GO TO STEP 3.
3	FILL OR DRAIN AS REQUIRED THEN RETEST FOR DTC “OIL PRESSURE FAULT”. (REFER TO OIL FILL PROCEDURE IN THIS MANUAL). IS DTC “OIL PRESSURE FAULT” STILL PRESENT?	GO TO STEP 4.	REPAIR SUCCESSFUL.*
4	WITH IGNITION KEY IN RUN POSITION, SQUEEZE OIL LINE BETWEEN THE TRACTION MOTOR AND OIL PUMP AND LISTEN FOR PUMP NOISE. IF PUMP IS RUNNING, THERE SHOULD BE A NOTICEABLE NOISE. IS OIL COOLING PUMP RUNNING?	GO TO STEP 7.	GO TO STEP 5.
5	CHECK HIGH VOLTAGE OIL PUMP FUSE LOCATED IN THE POWER DISTRIBUTION BOX. IS THE HIGH VOLTAGE FUSE BLOWN?	REPLACE HIGH VOLTAGE FUSE.*	GO TO STEP 6.
6	CHECK LOW VOLTAGE FUSE #12 IN THE JUNCTION BLOCK. IS THE LOW VOLTAGE FUSE BLOWN?	REPLACE LOW VOLTAGE FUSE 12.*	GO TO STEP 10.
7	WHILE PUMP IS RUNNING, DISCONNECT THE PUMP PRESSURE SWITCH CONNECTOR AND PROBE THE TWO PRESSURE SWITCH PINS FOR CONTINUITY. **OIL PUMP -C2** CAV / COLOR / FUNCTION A / OR / OIL PUMP PRESSURE SENSOR (+) B / DB / OIL PUMP PRESSURE SENSOR (–) 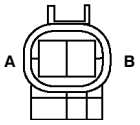 IS CONTINUITY PRESENT?	GO TO STEP 8.	TURN IGNITION KEY OFF. REPLACE PRESSURE SWITCH.*
8	TURN KEY OFF. DISCONNECT THE PCA C1 CONNECTOR.** DISCONNECT THE PCA C2 CONNECTOR AND CHECK THAT THE AA/BB TO THE PUMP CONNECTOR ARE NOT OPEN OR SHORTED. **POWERTRAIN CONTROLLER ASSEMBLY -C2** CAV / COLOR / FUNCTION AA / OR / OIL PUMP PRESSURE SENSOR (+) BB / DB / OIL PUMP PRESSURE SENSOR (–) 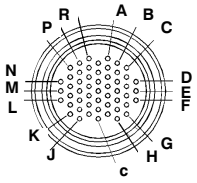 IS THE PUMP CABLE OPEN OR SHORTED?	REPLACE THE INTERCON–NECTING CABLE FROM THE PCA C2 TO THE OIL PUMP.*	GO TO STEP 9.

***Perform Verification TEST VER-1A. **Check connectors - Clean/repair as necessary.**

TEST 25 – OIL PRESSURE FAULT ($1E)

STEP	ACTION	YES	NO
9	DISCONNECT THE PCA C5 CONNECTOR.** OPEN THE PCA AND REPLACE THE CVC BOARD WITH THE CVC I/O PROBING TOOL. REATTACH THE PCA C2 CONNECTOR. PROBE FROM THE 2 PRESSURE SWITCH PINS TO THE CVC TOOL PINS G25–CVC PIN 24 G26–CVC PIN 34. **OIL PUMP -C2** CAV / COLOR / FUNCTION A / OR / OIL PUMP PRESSURE SENSOR (+) B / DB / OIL PUMP PRESSURE SENSOR (–) A B IS THERE AN OPEN OR IS G25 SHORTED TO GROUND?	REPLACE THE MOTHER BOARD.*	REPLACE THE CVC BOARD.*
10	WITH VEHICLE IN READY MODE PROBE CONNECTOR C3 PIN W FOR 12 VOLTS. **OIL PUMP -C3** CAV / COLOR / FUNCTION W / BK/OR / FUSED IGNITION SWITCH OUTPUT (RUN) Z / BK / GROUND S U Z W IS 12 VOLTS PRESENT?	GO TO STEP 11.	LOCATE OPEN IN F20 CIRCUIT AND REPAIR.*
11	WITH IGNITION KEY OFF PROBE OIL PUMP CONNECTOR C3 PIN Z FOR CONTINUITY TO GROUND. IS THERE CONTINUITY TO GROUND?	GO TO STEP 12.	LOCATE OPEN IN CIRCUIT Z1 AND REPAIR.*
12	DISABLE HIGH VOLTAGE BY TURNING SERVICE DISCONNECT SWITCH TO OFF. DISCONNECT PCA C2.** PROBE FROM PIN A TO CONNECTOR C3 PIN S FOR CONTINUITY. **POWERTRAIN CONTROLLER ASSEMBLY -C2** CAV / COLOR / FUNCTION A / GY/BK / OIL PUMP SPEED CONTROL PWM (+) R A B P C N M L D E F K J H G c IS CONTINUITY PRESENT?	GO TO STEP 13.	REPAIR OPEN IN OIL PUMP SPEED CONTROL (+) CIRCUIT.*

***Perform Verification TEST VER-1A. **Check connectors - Clean/repair as necessary.**

TEST 25 – OIL PRESSURE FAULT ($1E)

STEP	ACTION	YES	NO
13	PROBE FROM PIN B TO OIL PUMP CONNECTOR C3 PIN U FOR CONTINUITY.	REPLACE OIL PUMP.*	REPAIR OPEN IN OIL PUMP SPEED CONTROL (–) CIRCUIT.*

POWERTRAIN CONTROLLER ASSEMBLY -C2

CAV	COLOR	FUNCTION
B	LG/WT	OIL PUMP SPEED CONTROL PWM (–)

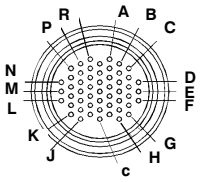

OIL PUMP -C3

CAV	COLOR	FUNCTION
U	LG/WT	OIL PUMP SPEED CONTROL PWM (–)

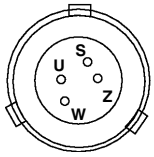

IS CONTINUITY PRESENT?

***Perform Verification TEST VER-1A. **Check connectors - Clean/repair as necessary.**

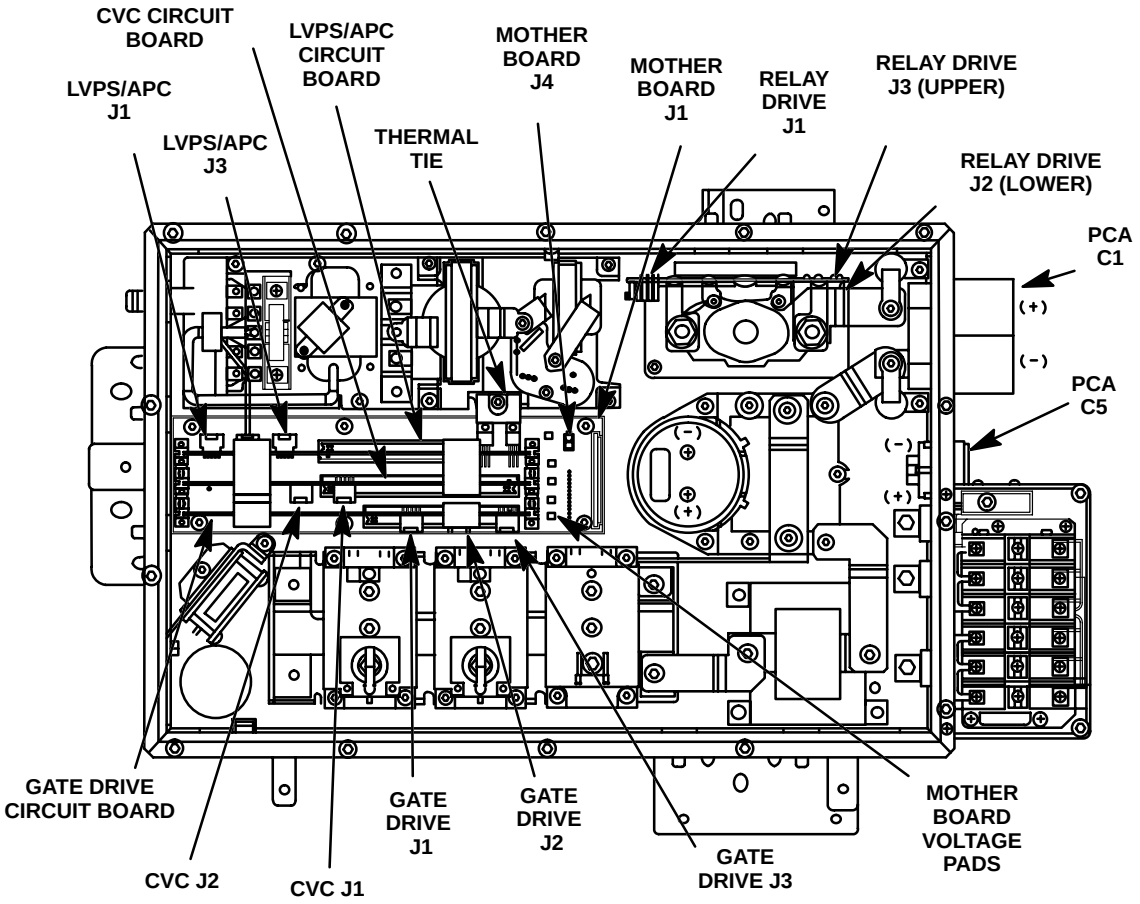

TEST 26 – OIL PUMP PWM FAILURE ($11)

Description: The CVC sends a PWM signal to the oil pump controller to control the speed of the pump. During the test, three different PWM duty–cycles are sent for a very short time. The PWM signal is sensed by the CVC to verify that the correct duty–cycle is being transmitted.

WARNING LAMP: THE "SERVICE REQUIRED" LAMP WILL BE ILLUMINATED.

Detection: When the ignition key is in the RUN position. During power–on, the CVC detects that the pump PWM control signal does not have the correct duty cycle.

Related Symptoms: Vehicle will not enter the READY mode.

Possible Causes: The following are possible causes for the OIL PUMP PWM TEST FAULT:

- The oil pump PWM control signal is shorted
- The CVC driver circuit is faulty
- The CVC sense circuit is faulty

TEST 26 – OIL PUMP PWM FAILURE ($11)

STEP	ACTION	YES	NO
1	HAS TEST 1 BEEN COMPLETED? **NOTE: REFER TO THE PCA–INTERNAL FOLD–OUT SCHEMATIC FOR THE FOLLOWING PROCEDURE.**	GO TO STEP 2.	PERFORM TEST 1.
2	DISCONNECT LOW VOLTAGE OIL PUMP CONNECTOR. USING THE SCAN TOOL, RUN OIL PUMP PWM TEST. DOES THE TEST PASS?	REPLACE OIL PUMP.*	GO TO STEP 3.
3	DISCONNECT PCA C5.** INSTALL CVC I/O PROBING BOARD. USING AN OHMMETER, PROBE FOR CONTINUITY BETWEEN CVC I/O BOARD PINS 21 AND 22. IS CONTINUITY PRESENT?	GO TO STEP 4.	REPLACE CVC BOARD.*
4	REMOVE PCA C2.** USING AN OHMMETER, PROBE FOR CONTINUITY BETWEEN CVC I/O BOARD PINS 21 AND 22. IS CONTINUITY PRESENT?	REPLACE MOTHER BOARD.*	REPAIR SHORT BETWEEN OIL PUMP PWM (+) AND PWM (–) CIRCUITS.*

***Perform Verification TEST VER-1A. **Check connectors - Clean/repair as necessary.**

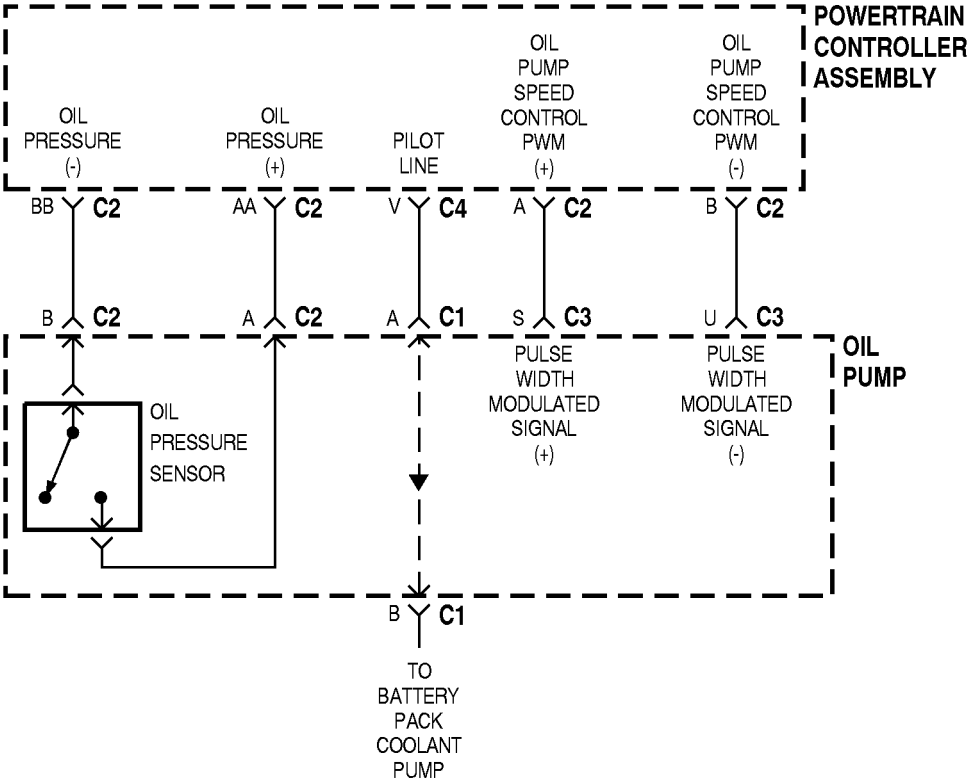

TEST 27 – OIL SWITCH FAULT (STUCK CLOSED) ($50)

Description: The CVC will check the status of the oil pressure switch prior to turning on the oil pump. If the switch is indicating oil pressure, the switch is assumed to be at fault.

WARNING LAMP: THE "SERVICE REQUIRED" LAMP WILL BE ILLUMINATED.

Detection: When the ignition key is turned to the RUN position. The oil pressure switch is indicating oil pressure when the oil pump is off.

Related Symptoms: It has no impact on driving condition.

Possible Causes: The following are possible causes for the OIL SWITCH FAULT:

- Oil pressure switch is stuck closed.
- Oil pressure switch is shorted to ground.

TEST 27 – OIL SWITCH FAULT (STUCK CLOSED) ($50)

STEP	ACTION	YES	NO
1	HAS TEST 1 BEEN COMPLETED?	GO TO STEP 2.	PERFORM TEST 1.
2	DISCONNECT THE PCA C1 CONNECTOR. DISCONNECT THE OIL PUMP C2 CONNECTOR AND PROBE THE 2 SWITCH PINS FOR CONTINUITY. **OIL PUMP -C2** CAV / COLOR / FUNCTION A / OR / OIL PUMP PRESSURE SENSOR (+) B / DB / OIL PUMP PRESSURE SENSOR(–) 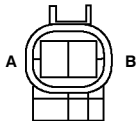 IS CONTINUITY PRESENT?	REPLACE THE SWITCH.*	GO TO STEP 3.
3	DISCONNECT THE PCA C5 CONNECTOR. REMOVE THE COVER TO THE PCA. REPLACE THE CVC BOARD WITH THE CVC I/O PROBING TOOL. USING AN OHMMETER, PROBE FROM OIL PUMP C2 PINS A/B TO CVC I/O PROBING TOOL PINS 46/47 FOR AN OPEN OR SHORT TO GROUND. IS AN OPEN OR A SHORT TO GROUND PRESENT?	GO TO STEP 4.	INSTALL A NEW CVC BOARD.*
4	DISCONNECT THE PCA C2 CONNECTOR AND USING AN OHMMETER, PROBE BETWEEN PCA C2 PINS AA/BB AND OIL PUMP C2 PINS A/B. **POWERTRAIN CONTROLLER ASSEMBLY -C2** CAV / COLOR / FUNCTION A / OR / OIL PUMP PRESSURE SENSOR (+) B / DB / OIL PUMP PRESSURE SENSOR(–) 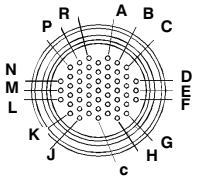 **OIL PUMP -C2** CAV / COLOR / FUNCTION A / OR / OIL PUMP PRESSURE SENSOR (+) B / DB / OIL PUMP PRESSURE SENSOR(–) 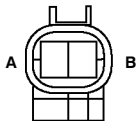 IS AN OPEN OR SHORT TO GROUND PRESENT?	REPAIR THE FAULT IN THE CIRCUIT BETWEEN THE OIL PUMP AND PCA.*	REPLACE MOTHER BOARD.*

***Perform Verification TEST VER-1A. **Check connectors - Clean/repair as necessary.**

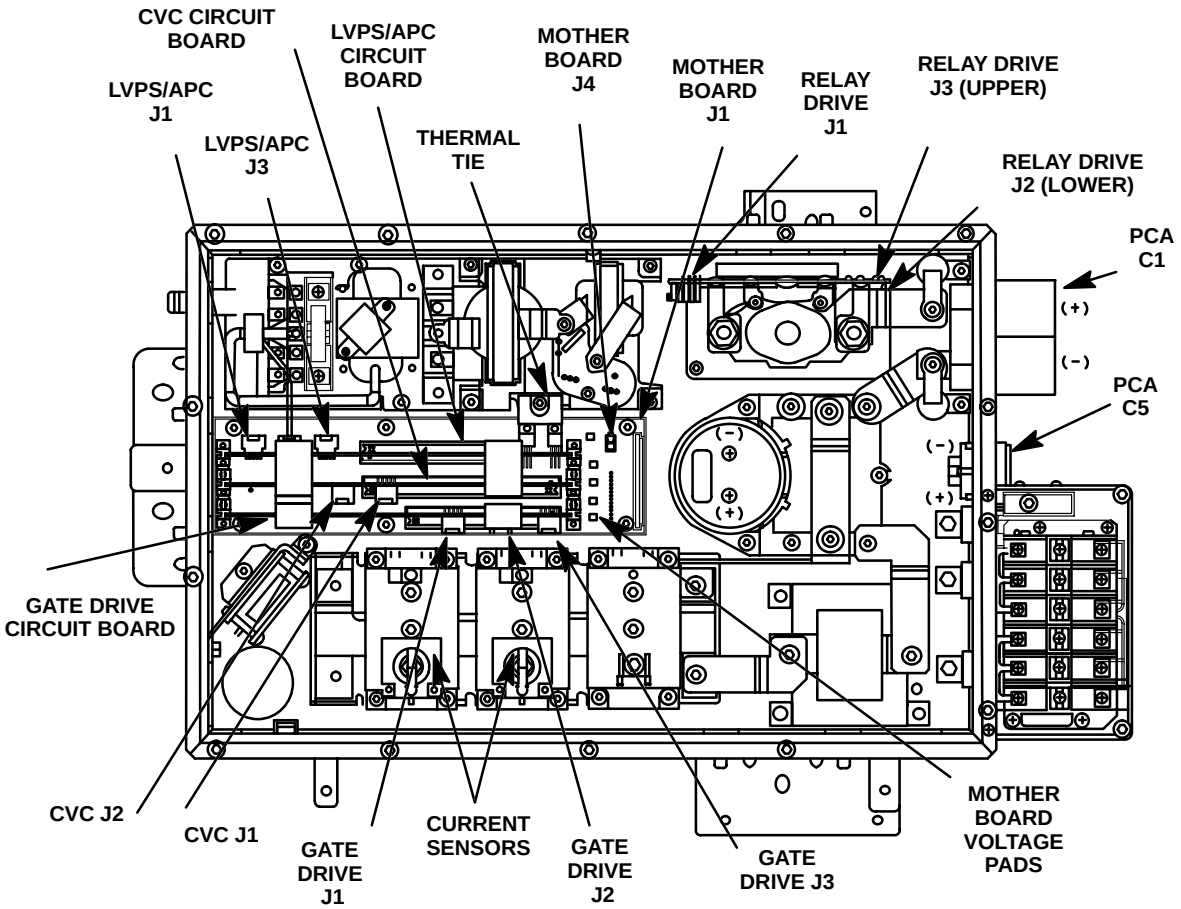

TEST 28 – OVER CURRENT ($19)

Description: One feedback for the control of the traction motor is to sense the current in the motor leads. This is accomplished using current sensors on two of the motor leads. Since the sum of the three currents always equals zero, the current in the third motor lead is calculated. The output of the current sensors is a voltage that is interpreted by the CVC. There is also a circuit that looks at the voltage output from the current sensors and compares it to two voltage references, representing the maximum positive and negative current thresholds. If either of the thresholds are met, the circuit will cause the CVC to temporarily reset the drive control of the motor.

Detection: When the ignition key is in the RUN position. The CVC has detected a motor lead current level greater than +585 amps or less than –585 amps.

Related Symptoms: Momentary loss of power.

Possible Causes: The following are possible causes for the OVER CURRENT FAULT:

- Faulty over current detection circuit on CVC circuit board
- Faulty current sensors
- Shorted motor winding
- Resolver cable failure

TEST 28 – OVER CURRENT ($19)

STEP	ACTION	YES	NO
1	HAS TEST 1 BEEN COMPLETED?	GO TO STEP 2.	PERFORM TEST 1.
2	ARE DTC'S "R/D LOSS FAULT" OR "RESOLVER COUNT FAILURE" PRESENT?	REPAIR OTHER DTC'S FIRST.*	GOT STEP 3.
3	INSTALL TRACTION MOTOR LEADS. TORQUE LEADS TO 72 IN. LBS. ARE APC POWER STAGE WIRES BUNDLED WITH A TIE STRAP AND AT LEAST 1 INCH AWAY FROM THE APC/LVPS BOARD? REFER TO THE ART BELOW FOR PROPER APC POWER STAGE STRAP ROUTING. 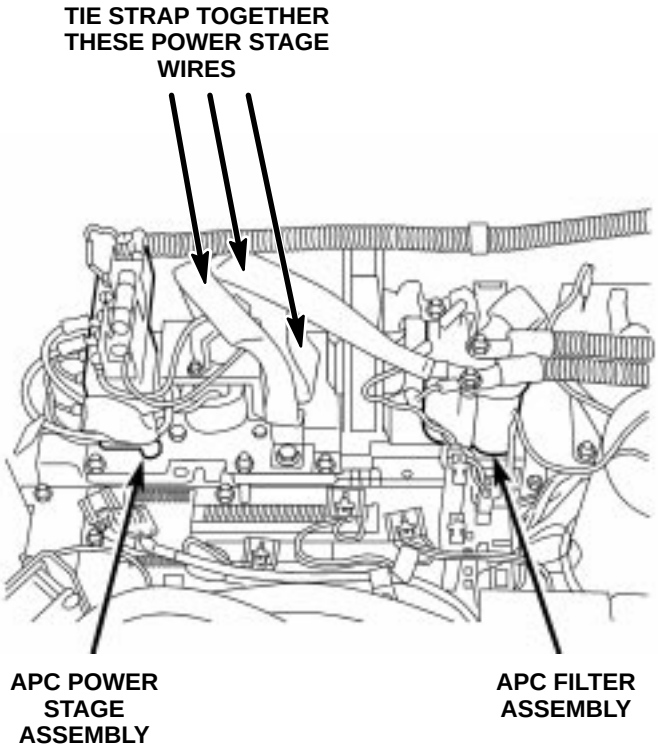 	GO TO STEP 4.	WIRES MUST BE MOVED TO AT LEAST 1 INCH AWAY FROM APC/LVPS BOARD AND BUNDLED TOGETHER WITH A TIE STRAP. REPAIR AS NECESSARY AND PROCEED TO STEP 4.

***Perform Verification TEST VER-1A. **Check connectors - Clean/repair as necessary.**

TEST 28 – OVER CURRENT ($19)

STEP	ACTION	YES	NO
4	VERIFY PROPER ROUTING OF MOTOR LEADS. REFER TO ART BELOW. ARE THE MOTOR LEADS PROPERLY ROUTED? 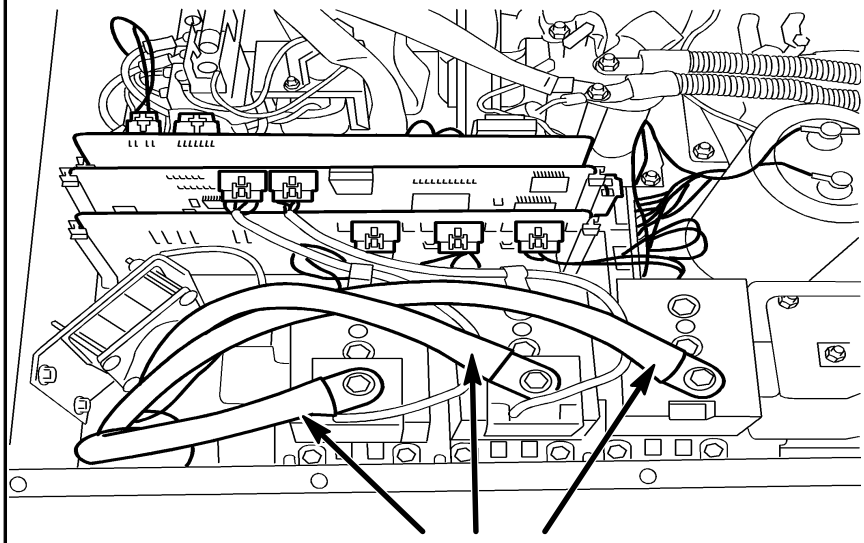 	GO TO STEP 5.	MOVE MOTOR LEADS AS NECESSARY.*
5	DISCONNECT A, B AND C MOTOR LEADS TO THE IGBT'S. PROBE A,B, AND C MOTOR LEADS TO CHASSIS GROUND FOR A SHORT IS THERE A SHORT PRESENT?	REPLACE THE TRACTION MOTOR.*	GO TO STEP 6.
6	RESTORE VEHICLE TO RUNNING CONDITION AND ROAD TEST. USING THE SCAN TOOL, CLEAR DTC "OVER CURRENT". USING THE SCAN TOOL, READ PCA DTCS. IS DTC "OVER CURRENT" PRESENT?	CALL EPIC HOT LINE.*	REPAIR SUCCESSFUL.*

***Perform Verification TEST VER-1A. **Check connectors - Clean/repair as necessary.**

THIS PAGE INTENTIONALLY LEFT BLANK

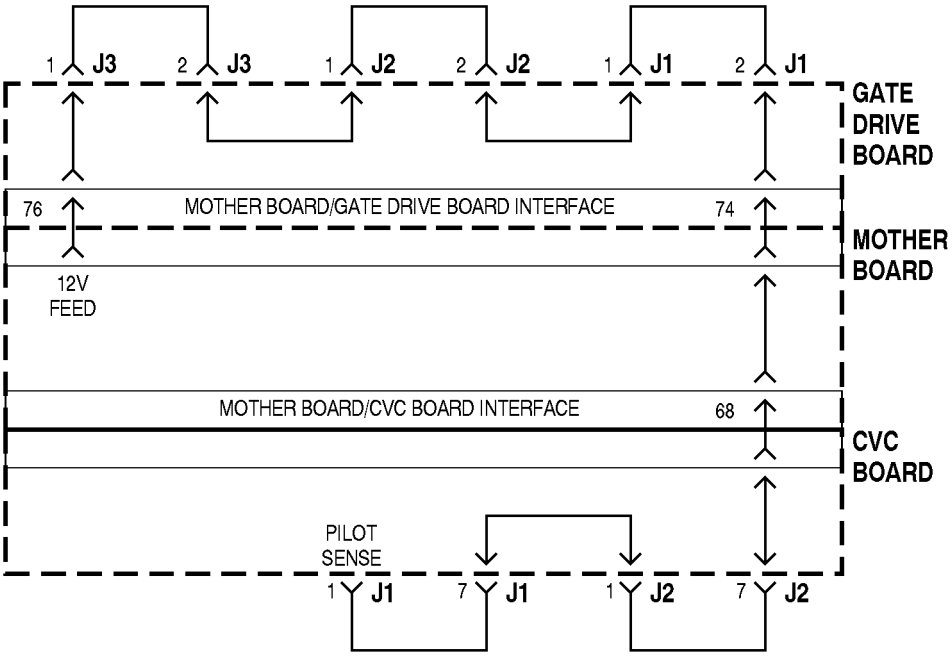

TEST 29 – PCA PILOT FAULT ($24)

Description: A pilot line inside the PCA passes through the current sensor connectors and the IGBT Gate drive connectors. It is connected to 12V and is sensed by the CVC. If any of the connections are broken, the CVC will disable the vehicle.

WARNING LAMP: THE "SERVICE REQUIRED" LAMP WILL BE ILLUMINATED.

Detection: When the ignition key is in the RUN position. The CVC senses that the PCA pilot line is open.

Related Symptoms: Vehicle will not enter RUN mode. If the failure occurred during driving, the READY display will be turned OFF. The vehicle will be disabled and coast to a stop.

Possible Causes: The following are possible causes for the PCA PILOT FAULT:

- One of the two current sensor connectors is open
- One of the three IGBT Gate drive connectors is open
- The CVC printed circuit board pilot line sense circuit is faulty

TEST 29 – PCA PILOT FAULT ($24)

STEP	ACTION	YES	NO
1	HAS TEST 1 BEEN COMPLETED? **NOTE: REFER TO THE PCA–INTERNAL FOLD–OUT SCHEMATIC FOR THE FOLLOWING PROCEDURE.**	GO TO STEP 2.	PERFORM TEST 1.
2	DISABLE THE TRACTION BATTERY PACK BY TURNING THE SERVICE DISCONNECT SWITCH TO OFF. DISCONNECT THE AUXILIARY BATTERY NEGATIVE CABLE AND OPEN THE PCA. ARE ALL CURRENT SENSOR AND IGBT DRIVE CONNECTORS FULLY SEATED AND NO PINS PULLED LOOSE?	GO TO STEP 3.	REPAIR AS NECESSARY.*
3	DISCONNECT THE THREE IGBT CONNECTORS ON THE GATE DRIVE BOARD.** USE THE (MOLEX 70543–006) CABLE PROBING TOOL TO PROBE BETWEEN PINS 1 AND 2 (HARNESS SIDE) ON EACH OF THE THREE GATE DRIVE CONNECTORS. IS AN OPEN PRESENT?	REPLACE AFFECTED IGBT.*	GO TO STEP 4.
4	DISCONNECT THE TWO CURRENT SENSOR CONNECTORS ON THE CVC BOARD.** USING AN OHMMETER, PROBE BETWEEN PINS 1 AND 7 (HARNESS SIDE) ON THE CURRENT SENSOR CONNECTOR. IS AN OPEN PRESENT?	REPLACE THE AFFECTED CURRENT SENSOR.*	GO TO STEP 5.
5	RECONNECT THE THREE IGBT CONNECTORS TO THE GATE DRIVE BOARD. RECONNECT CVC J2 TO THE CVC BOARD. RECONNECT THE AUXILIARY BATTERY NEGATIVE CABLE. TURN THE IGNITION KEY TO RUN. INSERT THE 7–PIN CABLE PROBING TOOL INTO J1 ON THE CVC BOARD AND PROBE PIN 7 FOR +12 VDC. IS +12 VDC PRESENT?	INSTALL NEW CVC BOARD.*	GO TO STEP 6.
6	DISCONNECT CVC J2.** INSTALL THE (MOLEX 14–56–2073) PROBE TOOL INTO CVC J2 AND PROBE PIN 7 FOR +12 VDC. IS +12 VDC PRESENT?	INSTALL NEW CVC BOARD.*	GO TO STEP 7.
7	TURN THE IGNITION KEY TO OFF. REMOVE THE CVC BOARD AND INSTALL THE CVC I/O PROBE TOOL. TURN THE IGNITION KEY TO ON. PROBE FROM PIN 68 TO THE MOTHER BOARD RTN PAD. IS 12V PRESENT?	INSTALL NEW CVC BOARD.*	GO TO STEP 8.
8	TURN THE IGNITION KEY TO OFF. REPLACE THE CVC I/O PROBE TOOL WITH ORIGINAL CVC BOARD. REMOVE THE GATE DRIVE BOARD WITH THE 3 IGBT CONNECTORS STILL ATTACHED. PROBE THE GATE DRIVE I/O CONNECTOR PINS 74 AND 76 (THE LAST 2 PINS ON THE TOP SIDE OF THE I/O CONNECTOR) FOR CONTINUITY. IS CONTINUITY PRESENT?	INSTALL A NEW PCA MOTHER BOARD.*	INSTALL A NEW GATE DRIVE BOARD.*

***Perform Verification TEST VER-1A. **Check connectors - Clean/repair as necessary.**

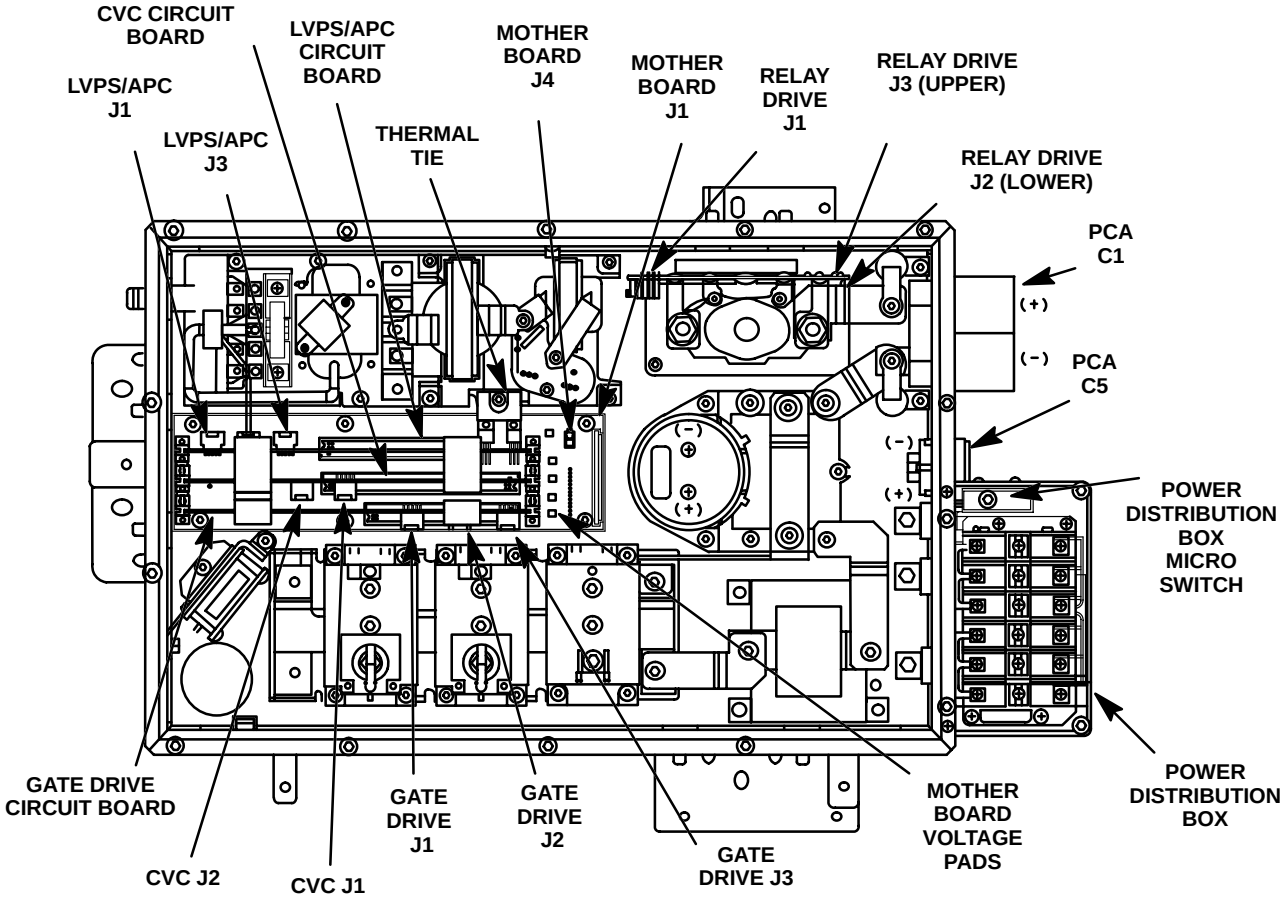

TEST 30 – PILOT DROPOUT FAULT ($25) – INCOMPLETE

NOTE: THIS PROCEDURE IS INCOMPLETE AT THE TIME OF THIS PRINTING. IF THIS DTC IS SET, CALL THE EPIC HOT LINE.

WARNING LAMP: THE "SERVICE REQUIRED" LAMP WILL BE ILLUMINATED.

Detection: When the ignition key is in the RUN position, the CVC senses less than 8V on the pilot line.

Related Symptoms: Vehicle will not enter READY mode. If the failure occurred during driving, the READY display will be turned OFF. The vehicle will be disabled and coast to a stop.

Possible Causes: The following are possible causes for the PILOT DROPOUT FAULT:

- A high–voltage connector is disconnected
- Faulty sense circuit in the CVC printed circuit board
- Power distribution box cover is removed
- Faulty micro switch on the power distribution box
- Faulty pilot relay

TEST 30 – PILOT DROP OUT FAULT ($25) – INCOMPLETE

STEP	ACTION	YES	NO
1	HAS TEST 1 BEEN COMPLETED? **NOTE: REFER TO THE PCA–INTERNAL FOLD–OUT SCHEMATIC FOR THE FOLLOWING PROCEDURE.**	GO TO STEP 2.	PERFORM TEST 1.
2	INSPECT BEMS™ FUSE (FUSE 16) IN POWER DISTRIBUTION CENTER (PDC). IS THE FUSE BLOWN?	REPLACE FUSE.*	GO TO STEP 3.
3	DISABLE THE TRACTION BATTERY PACK BY TURNING THE SERVICE DISCONNECT SWITCH TO OFF. DISCONNECT AND ISOLATE THE AUXILIARY BATTERY NEGATIVE CABLE. REMOVE PCA CONNECTOR C1.** USING AN OHMMETER, CHECK FOR CONTINUITY BETWEEN PCA C1 PINS 1 AND 2 INTO THE PCA. **POWERTRAIN CONTROLLER ASSEMBLY –C1** CAV / COLOR / FUNCTION 1 / WT / PILOT LINE IN 2 / BR / PILOT LINE OUT 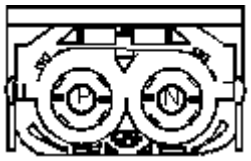 IS CONTINUITY PRESENT?	GO TO STEP 6.	GO TO STEP 4.
4	DISCONNECT PTC HEATER CONTROLLER HIGH VOLTAGE CONNECTOR.** USING AN OHMMETER, CHECK FOR CONTINUITY BETWEEN PCA C1 PIN 1 (INTO THE PCA) AND PTC HEATER CONTROLLER CAVITY A. **PTC HEATER CONTROL** CAV / COLOR / FUNCTION A / WT / PILOT B / BR / PILOT IS CONTINUITY PRESENT?	GO TO STEP 5.	REFERRING TO SYSTEM SCHEMATIC, REPAIR OPEN IN PILOT LINE CIRCUIT BETWEEN PTC HEATER CONTROLLER AND PCA.*
5	USING AN OHMMETER, CHECK FOR CONTINUITY BETWEEN PCA C1 PIN 2 (INTO THE PCA) AND PTC HEATER CONTROLLER CAVITY B. **POWERTRAIN CONTROLLER ASSEMBLY –C1** CAV / COLOR / FUNCTION 1 / WT / PILOT LINE IN 2 / BR / PIILOT LINE OUT IS CONTINUITY PRESENT?	CALL EPIC HOT LINE.*	REFERRING TO SYSTEM SCHEMATIC, REPAIR OPEN IN PILOT LINE CIRCUIT BETWEEN PTC HEATER CONTROLLER AND PCA.*

***Perform Verification TEST VER-1A. **Check connectors - Clean/repair as necessary.**

TEST 30 – PILOT DROP OUT FAULT ($25) – INCOMPLETE

STEP	ACTION	YES	NO
6	REMOVE BATTERY INTERFACE CONNECTOR (BIC) C1.** RECONNECT PCA C1. USING AN OHMMETER, MEASURE THE CONTINUITY ON THE HARNESS SIDE BETWEEN C1 PINS 1 AND 2. BATTERY INTERFACE CENTER –C1 CAV / COLOR / FUNCTION 1 / WT / PILOT LINE 2 / BR / PILOT LINE 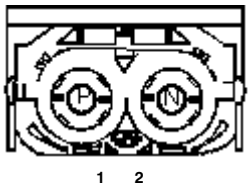 IS CONTINUITY PRESENT?	GO TO STEP 9.	GO TO STEP 7.
7	DISCONNECT PCA C1.* USING AN OHMMETER, MEASURE THE CONTINUITY ON THE HARNESS SIDE BETWEEN BIC C1 PIN 1 AND PCA C1 PIN 1. BATTERY INTERFACE CENTER –C1 CAV / COLOR / FUNCTION 1 / WT / PILOT LINE 2 / BR / PILOT LINE 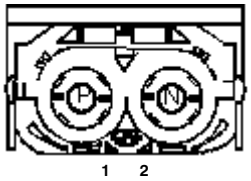 POWERTRAIN CONTROLLER ASSEMBLY –C1 CAV / COLOR / FUNCTION 1 / WT / PILOT LINE IN 2 / BR / PILOT LINE OUT 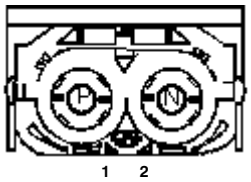 IS CONTINUITY PRESENT?	GO TO STEP 8.	REPAIR OPEN IN PILOT CIRCUIT BETWEEN PCA AND BIC.*
8	USING AN OHMMETER, MEASURE THE CONTINUITY ON THE HARNESS SIDE BETWEEN BIC C1 PIN 2 AND PCA C1 PIN 2. IS CONTINUITY PRESENT?	CALL EPIC HOT LINE.*	REPAIR OPEN IN PILOT CIRCUIT BETWEEN PCA AND BIC.*
9	DISCONNECT BIC C3.** USING AN OHMMETER, MEASURE THE CONTINUITY INTO THE BIC BETWEEN C3 CAVITY F AND C1 CAVITY 1. BATTERY INTERFACE CENTER –C3 CAV / COLOR / FUNCTION DD / DB / FUSED B(+) E1 / BR / PILOT LINE F1 / BR/WT / PILOT LINE G1 / OR / PILOT LINE Y / DB / FUSED B(+) 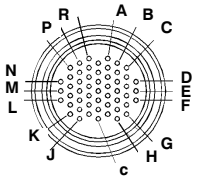 IS CONTINUITY PRESENT?	GO TO STEP 15.	GO TO STEP 10.
10	DISCONNECT BIC C2.* USING AN OHMMETER, MEASURE THE CONTINUITY INTO THE BIC BETWEEN C4 CAVITY F AND C2 CAVITY D. BATTERY INTERFACE CENTER –C2 CAV / COLOR / FUNCTION B / WT / PILOT LINE D / BR / PILOT LINE 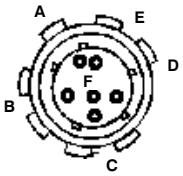 IS CONTINUITY PRESENT?	GO TO STEP 11.	REPLACE BIC.*

***Perform Verification TEST VER-1A. **Check connectors - Clean/repair as necessary.**

TEST 30 – PILOT DROP OUT FAULT ($25) – INCOMPLETE

STEP	ACTION	YES	NO
11	USING AN OHMMETER, MEASURE THE CONTINUITY INTO THE BIC BETWEEN C1 CAVITY 1 AND C2 CAVITY B. **BATTERY INTERFACE CENTER – C1** CAV / COLOR / FUNCTION 1 / WT / PILOT LINE 2 / BR / PILOT LINE 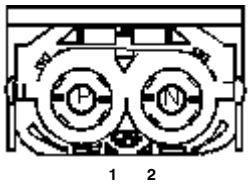 IS CONTINUITY PRESENT?	GO TO STEP 12.	REPLACE BIC.*
12	DISCONNECT ON BOARD CHARGER (OBC) CONNECTOR C2.** USING AN OHMMETER, MEASURE THE CONTINUITY INTO THE HARNESS BETWEEN BIC C2 PIN B AND OBC C2 PIN D. **BATTERY INTERFACE CENTER – C2** CAV / COLOR / FUNCTION B / WT / PILOT LINE D / BR / PILOT LINE 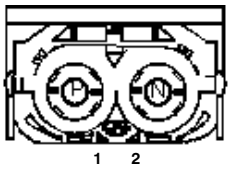 **ON BOARD CHARGER – C2** CAV / COLOR / FUNCTION B / BR / PILOT LINE D / WT / PILOT LINE 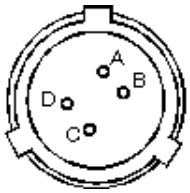 IS CONTINUITY PRESENT?	GO TO STEP 13.	REPAIR OPEN IN PILOT CIRCUIT BETWEEN BIC AND OBC.*
13	USING AN OHMMETER, MEASURE THE CONTINUITY INTO THE HARNESS BETWEEN BIC C2 PIN D AND OBC C2 PIN B. IS CONTINUITY PRESENT?	GO TO STEP 14.	REPAIR OPEN IN PILOT CIRCUIT BETWEEN BIC AND OBC.*
14	USING AN OHMMETER, MEASURE THE CONTINUITY INTO THE OBC C2 BETWEEN CAVITIES B AND D. **ON BOARD CHARGER – C2** CAV / COLOR / FUNCTION B / BR / PILOT LINE D / WT / PILOT LINE 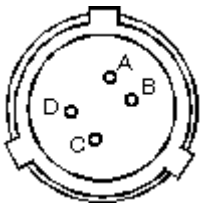 IS CONTINUITY PRESENT?	CALL EPIC HOT LINE.*	REPLACE OBC.*
15	USING AN OHMMETER, MEASURE THE CONTINUITY INTO THE BIC BETWEEN BIC C3 CAVITIES Y/DD (SPLICED TOGETHER) AND C3 CAVITY E. **BATTERY INTERFACE CENTER – C3** CAV / COLOR / FUNCTION DD / DB / FUSED B(+) E1 / BR / PILOT LINE F1 / BR/WT / PILOT LINE G1 / OR / PILOT LINE Y / DB / FUSED B(+) 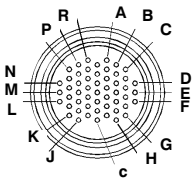 IS CONTINUITY PRESENT?	GO TO STEP 21.	GO TO STEP 16.

***Perform Verification TEST VER-1A. **Check connectors - Clean/repair as necessary.**

TEST 30 – PILOT DROP OUT FAULT ($25) – INCOMPLETE

STEP	ACTION	YES	NO
16	DISCONNECT BIC C3.** USING AN OHMMETER, MEASURE THE CONTINUITY INTO THE BIC BETWEEN BIC C4 CAVITIES Y/DD (SPLICED TOGETHER) AND C3 CAVITY 1. **BATTERY INTERFACE CENTER –C3** CAV / COLOR / FUNCTION 1 / DB / PILOT LINE 2 / WT / PILOT LINE **BATTERY INTERFACE CENTER –C4** CAV / COLOR / FUNCTION DD / DB / FUSED B(+) E1 / BR / PILOT LINE F1 / BR/WT / PILOT LINE G1 / OR / PILOT LINE Y / DB / FUSED B(+) IS CONTINUITY PRESENT?	GO TO STEP 17.	REPLACE BIC.*
17	USING AN OHMMETER, MEASURE THE CONTINUITY INTO THE BIC BETWEEN BIC C4 CAVITY E AND C3 CAVITY 2. IS CONTINUITY PRESENT?	GO TO STEP 18.	REPLACE BIC.*
18	DISCONNECT SERVICE DISCONNECT SWITCH CONNECTOR.* USING AN OHMMETER, MEASURE THE CONTINUITY INTO THE HARNESS BETWEEN BIC C3 CAVITY 1 AND SERVICE DISCONNECT CONNECTOR PIN 1. **BATTERY INTERFACE CENTER –C3** CAV / COLOR / FUNCTION 1 / DB / PILOT LINE 2 / WT / PILOT LINE **SERVICE DISCONNECT SWITCH** CAV / COLOR / FUNCTION 1 / DB / PILOT LINE 2 / WT / PILOT LINE IS CONTINUITY PRESENT?	GO TO STEP 19.	REPAIR OPEN IN PILOT CIRCUIT BETWEEN BIC AND SERVICE DISCONNECT SWITCH.*
19	USING AN OHMMETER, MEASURE THE CONTINUITY INTO THE HARNESS BETWEEN BIC C3 CAVITY 2 AND SERVICE DISCONNECT CONNECTOR PIN 2. IS CONTINUITY PRESENT?	GO TO STEP 20.	REPAIR OPEN IN PILOT CIRCUIT BETWEEN BIC AND SERVICE DISCONNECT SWITCH.*
20	INSTALL SERVICE DISCONNECT SPECIAL TOOL. **WARNING! PERFORM THE FOLLOWING STEP USING EXTREME CAUTION. HIGH VOLTAGE FROM THE BATTERY PACK WILL BE PRESENT.** TURN THE SERVICE DISCONNECT SWITCH TO THE ON POSITION. USING AN OHMMETER, MEASURE THE CONTINUITY INTO THE SERVICE DISCONNECT SWITCH BETWEEN CAVITIES 1 AND 2. IS CONTINUITY PRESENT?	CALL EPIC HOT LINE.*	REPLACE SERVICE DISCONNECT SWITCH.*

***Perform Verification TEST VER-1A. **Check connectors - Clean/repair as necessary.**

TEST 30 – PILOT DROP OUT FAULT ($25) – INCOMPLETE

STEP	ACTION	YES	NO
21	DISCONNECT JUNCTION BLOCK CONNECTOR C2.* USING AN OHMMETER, MEASURE THE CONTINUITY INTO THE HARNESS BETWEEN BIC C4 CAVITY E AND JUNCTION BLOCK C2 CAVITY 30. **BATTERY INTERFACE CENTER –C4** CAV / COLOR / FUNCTION DD / DB / FUSED B(+) E1 / BR / PILOT LINE F1 / BR/WT / PILOT LINE G1 / OR / PILOT LINE Y / DB / FUSED B(+) **JUNCTION BLOCK –C2** CAV / COLOR / FUNCTION 30 / BR / PILOT LINE IS CONTINUITY PRESENT?	GO TO STEP 22.	REPAIR OPEN IN PILOT CIRCUIT BETWEEN BIC AND JUNCTION BLOCK.*
22	USING AN OHMMETER, MEASURE THE CONTINUITY INTO THE HARNESS BETWEEN BIC C4 CAVITY G AND JUNCTION BLOCK C1 CAVITY 12. IS CONTINUITY PRESENT?	GO TO STEP 23.	REPAIR OPEN IN PILOT CIRCUIT BETWEEN BIC AND JUNCTION BLOCK.*
23	DISCONNECT HIGH VOLTAGE CUTOFF (INERTIA) SWITCH (LOCATED UNDERNEATH AUXILIARY BATTERY, ATTACHED TO LEFT FRAME RAIL). USING AN OHMMETER, MEASURE THE CONTINUITY INTO THE HARNESS BETWEEN BIC C4 CAVITY F AND INERTIA SWITCH CAVITY C. **BATTERY INTERFACE CENTER –C4** CAV / COLOR / FUNCTION DD / DB / FUSED B(+) E1 / BR / PILOT LINE F1 / BR/WT / PILOT LINE G1 / OR / PILOT LINE Y / DB / FUSED B(+) **HIGH VOLTAGE BATTERY CUTOFF (INERTIA) SWITCH** CAV / COLOR / FUNCTION A / WT / PILOT LINE RELAY OUTPUT C / BR/WT / PILOT LINE IS CONTINUITY PRESENT?	GO TO STEP 24.	REPAIR OPEN IN PILOT CIRCUIT BETWEEN BIC AND INERTIA SWITCH.*

***Perform Verification TEST VER-1A. **Check connectors - Clean/repair as necessary.**

TEST 30 – PILOT DROP OUT FAULT ($25) – INCOMPLETE

STEP	ACTION	YES	NO
24	DISCONNECT JUNCTION BLOCK CONNECTOR C1.** USING AN OHMMETER, MEASURE THE CONTINUITY INTO THE HARNESS BETWEEN JUNCTION BLOCK C1 CAVITY 13 AND INERTIA SWITCH CAVITY C. IS CONTINUITY PRESENT? JUNCTION BLOCK –C1 CAV / COLOR / FUNCTION 12 / OR / PILOT LINE 13 / WT / PILOT LINE 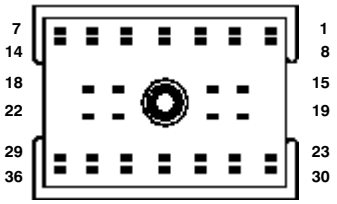 	GO TO STEP 25.	REPAIR OPEN IN PILOT CIRCUIT BETWEEN JUNCTION BLOCK AND INERTIA SWITCH.*
25	DISCONNECT POWER DISTRIBUTION CENTER (PDC) CONNECTOR C7.** USING AN OHMMETER, MEASURE THE CONTINUITY INTO THE HARNESS BETWEEN BIC C4 CAVITIES Y/DD (SPLICED TOGETHER) AND PDC C7 CAVITY 9. IS CONTINUITY PRESENT? BATTERY INTERFACE CENTER –C4 CAV / COLOR / FUNCTION DD / DB / FUSED B(+) E1 / BR / PILOT LINE F1 / BR/WT / PILOT LINE G1 / OR / PILOT LINE Y / DB / FUSED B(+) 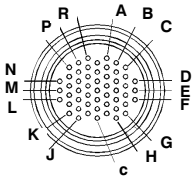 PDC –C7 CAV / COLOR / FUNCTION 9 / DB / FUSED B(+) 	GO TO STEP 26.	REPAIR OPEN IN CIRCUIT BETWEEN PDC AND BIC.*
26	USING AN OHMMETER, MEASURE THE CONTINUITY INTO THE JUNCTION BLOCK BETWEEN PILOT RELAY CAVITIES AND JUNCTION BLOCK CONNECTORS. REFER TO JUNCTION BLOCK WIRING DIAGRAM SECTION 8W–12 IN THIS MANUAL. IS CONTINUITY PRESENT?	CALL EPIC HOT LINE.*	REPLACE JUNCTION BLOCK.*

***Perform Verification TEST VER-1A. **Check connectors - Clean/repair as necessary.**

THIS PAGE INTENTIONALLY LEFT BLANK

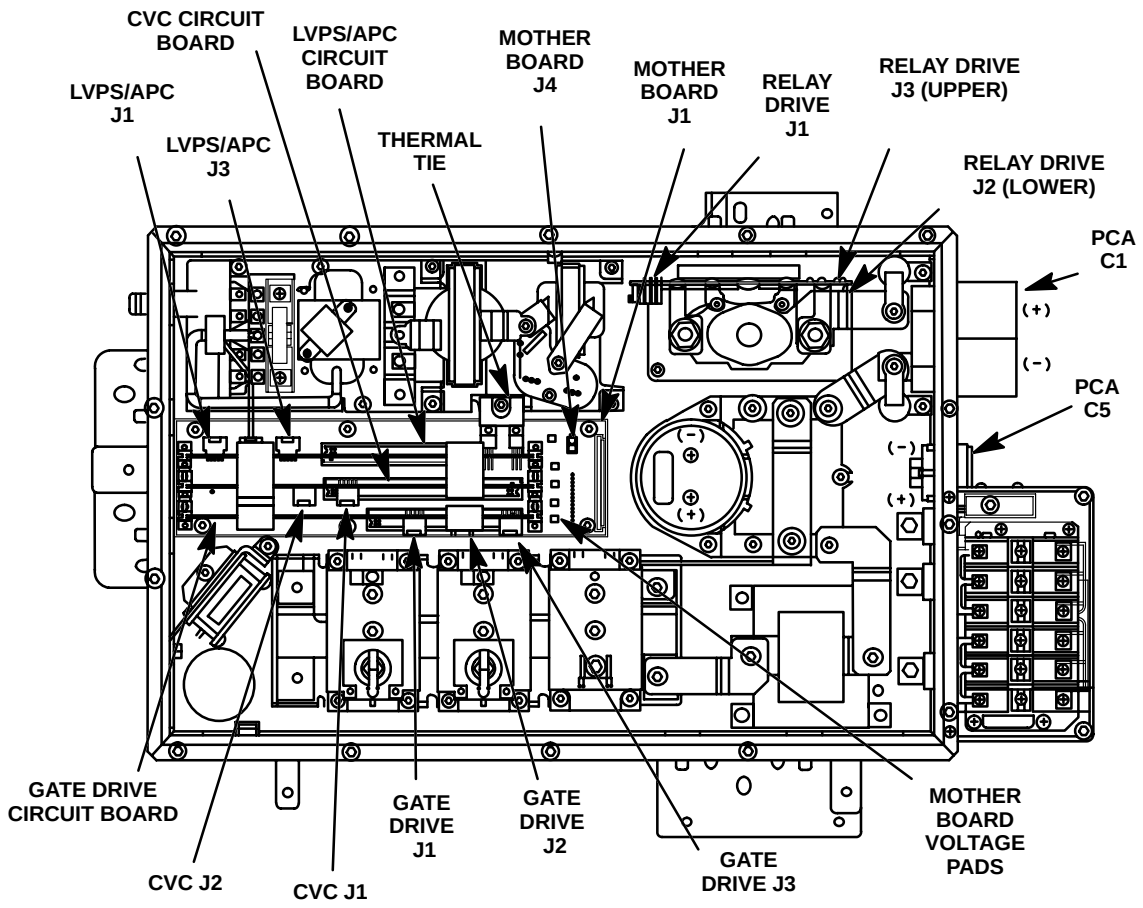

TEST 31 – POSITIVE 15V FAULT ($31)

Description: The CVC circuit board monitors the +15V power supply output. If the output voltage varies by more than ± 2V, the CVC will disable the vehicle.

WARNING LAMP: THE "SERVICE REQUIRED" LAMP WILL BE ILLUMINATED.

Detection: When the ignition key is in the RUN position. The CVC detects that the +15V power supply output is greater than +17V or less than +13V.

Related Symptoms: Vehicle will not enter READY mode. If the failure occurred during driving, the READY display will be turned OFF. The vehicle will be disabled and coast to a stop.

Possible Causes: The following are possible causes for the POSITIVE 15V FAULT:

- Faulty LVPS/APC printed circuit board
- Faulty CVC printed circuit board

TEST 31 – POSITIVE 15V FAULT ($31)

STEP	ACTION	YES	NO
1	HAS TEST 1 BEEN COMPLETED? **NOTE: REFER TO THE PCA–INTERNAL FOLD–OUT SCHEMATIC FOR THE FOLLOWING PROCEDURE.**	GO TO STEP 2.	PERFORM TEST 1.
2	DISCONNECT THE PCA C1 CONNECTOR AND OPEN THE PCA. TURN THE KEY TO RUN. PROBE BETWEEN THE MOTHER BOARD (+)15VDC AND RTN PADS FOR PRESENCE OF +15VDC ±10%. IS +15VDC ±10% PRESENT?	GO TO STEP 4.	GO TO STEP 3.
3	DISCONNECT PCA C5 AND REPLACE THE LVPS/APC BOARD WITH LVPS/APC I/O PROBING TOOL. REPLACE THE CVC BOARD WITH CVC I/O PROBING TOOL. USING AN OHMMETER, CHECK FOR CONTINUITY BETWEEN THE FOLLOWING PINS: APC/LVPS I/O BOARD — CVC I/O BOARD 15 (+15V) — 90 (+15V) 46 (–15V) — 92 (–15V) IS CONTINUITY PRESENT?	GO TO STEP 4.	DISCONNECT PCA C5 AND REPLACE THE MOTHER BOARD THEN GO TO STEP 4.
4	TURN THE KEY OFF. DISCONNECT PCA C5 CONNECTOR. REMOVE THE GATE DRIVE BOARD AND REATTACH THE PCA C5 CONNECTOR. ERASE DTC “POSITIVE 15V FAULT”. USE SCAN TOOL TO READ DTC’S. TURN KEY TO RUN POSITION. IS DTC “POSITIVE 15V FAULT” STILL PRESENT?	DISCONNECT PCA C5 AND INSTALL A NEW GATE DRIVE BOARD.*	DISCONNECT PCA C5 AND INSTALL A NEW APC/LVPS BOARD.*

***Perform Verification TEST VER-1A. **Check connectors - Clean/repair as necessary.**

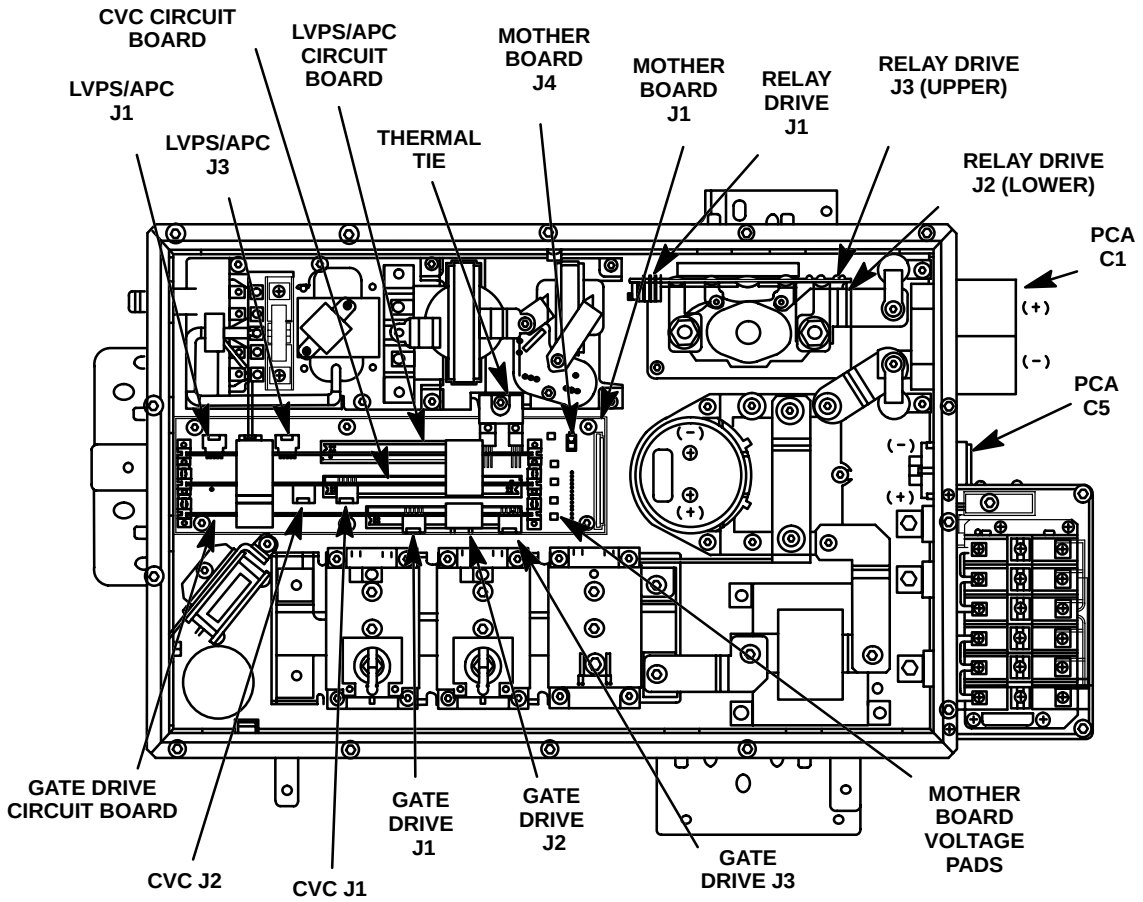

TEST 32 – POWER BRIDGE PWM TEST FAULT ($12)

Description: The CVC sends a PWM signal to the gate drives for each of the three IGBT's to control the speed of the motor. This signal is also sensed by the CVC to verify that the correct duty–cycle is being transmitted. During the test, three different PWM duty–cycles are sent for a very short time.

WARNING LAMP: THE "SERVICE REQUIRED" LAMP WILL BE ILLUMINATED.

Detection: When the key is in the RUN position. During power–on, the CVC detects that the power bridge PWM control signals do not have the correct duty cycle.

Related Symptoms: Vehicle will not enter READY mode.

Possible Causes: The following are possible causes for the POWER BRIDGE PWM TEST FAULT:

- The power bridge PWM control signal is shorted
- The CVC driver circuit is faulty
- The CVC sense circuit is faulty

TEST 32 – POWER BRIDGE PWM TEST FAULT ($12)

STEP	ACTION	YES	NO
1	HAS TEST 1 BEEN COMPLETED? **NOTE: REFER TO THE PCA–INTERNAL FOLD–OUT SCHEMATIC FOR THE FOLLOWING PROCEDURE.**	GO TO STEP 2.	PERFORM TEST 1.
2	HAVE ANY APC POWER RELATED FAILURES BEEN REPORTED?	GO TO STEP 3.	GO TO STEP 4.
3	REPAIR ANY APC POWER FAILURES. IS DTC “POWER BRIDGE PWM TEST FAULT” STILL PRESENT?	GO TO STEP 4.	REPAIR SUCCESSFUL.*
4	ARE THE THREE IGBT DRIVE CONNECTORS AND THEIR RESPECTIVE PINS ON THE GATE DRIVE BOARD FULLY SEATED?	GO TO STEP 5.	REPAIR AS NECESSARY.*
5	REMOVE GATE DRIVE BOARD. TURN IGNITION TO ON. USING THE SCAN TOOL, RUN THE POWER BRIDGE PWM TEST. DOES THE TEST PASS?	REPLACE GATE DRIVE BOARD.*	GO TO STEP 6.
6	TURN IGNITION OFF. REMOVE CVC BOARD AND INSTALL CVC I/O PROBING TOOL. **NOTE: LEAVE GATE DRIVE BOARD OUT.** USING AN OHMMETER, CHECK FOR CONTINUITY BETWEEN THE FOLLOWING CVC I/O PINS: 35 TO 36 37 TO 38 39 TO 40 41 TO 42 43 TO 44 45 TO 46 IS CONTINUITY PRESENT BETWEEN ANY OF THESE COMBINATIONS?	REPLACE MOTHER BOARD.*	REPLACE CVC BOARD.*

***Perform Verification TEST VER-1A. **Check connectors - Clean/repair as necessary.**

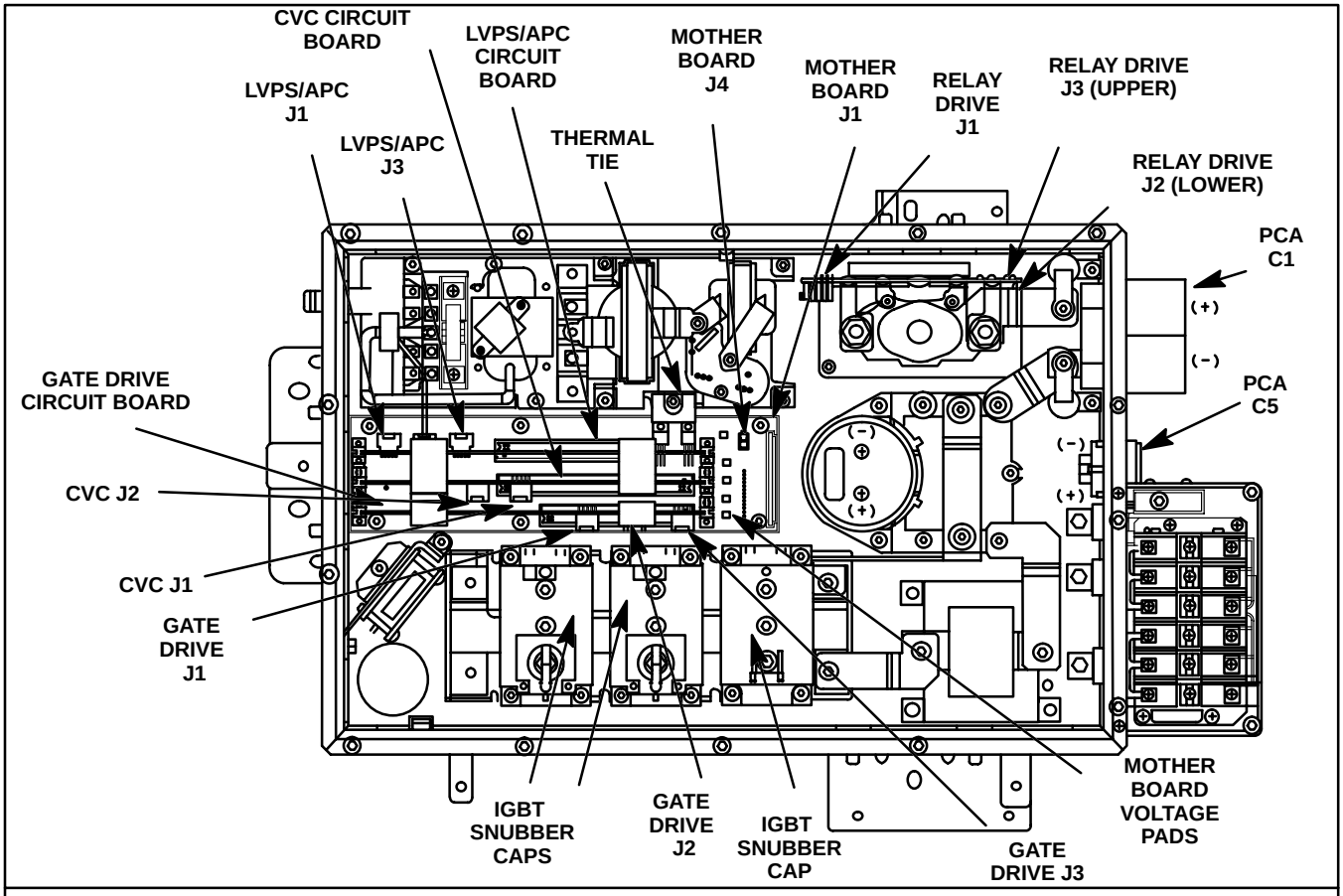

TEST 33 – PRECHARGE RELAY FAILURE ($03)

Description: For a normal power–on, the PCA closes the precharge relay followed by the main relay to prepare the high voltage bus for precharging by the BEMS™. For a Mode 6 startup, the traction battery voltage will be present at the input of the PCA prior to closure of the precharge and main relays. When the precharge relay is closed, an 80Ω resistor connects the PCA high voltage input to the link. There is a 3200µf capacitor across the link. Prior to closing the main relay, the link voltage is monitored waiting for the high voltage input and the link to equalize. If the link voltage rises too slowly, the precharge relay is opened. This fault will cause the vehicle to be disabled.

WARNING LAMP: THE "SERVICE REQUIRED" LAMP WILL BE ILLUMINATED.

Detection: When the ignition key is in the START or RUN position. The code will set when link voltage does not charge up properly in a predetermined amount of time after the precharge relay is closed.

Related Codes: Link Fault

Related Symptoms: Vehicle will not enter READY mode.

Possible Causes: The following are possible causes for the PRECHARGE RELAY FAILURE FAULT:

- Faulty precharge relay on the relay drive printed circuit board
- There is a short on the link caused by the PCA or a high voltage accessory
- The safety relay is closed prior to the closing of the precharge relay for a normal power–up
- The link voltage sense circuit is defective on the relay drive printed circuit board
- The link voltage sense circuit is defective on the CVC printed circuit board

TEST 33 – PRECHARGE RELAY FAILURE ($03)

STEP	ACTION	YES	NO
1	HAS TEST 1 BEEN COMPLETED? **NOTE: REFER TO THE PCA–INTERNAL FOLD–OUT SCHEMATIC FOR THE FOLLOWING PROCEDURE.**	GO TO STEP 2.	PERFORM TEST 1.
2	DISABLE THE TRACTION BATTERY PACK BY TURNING THE SERVICE DISCONNECT SWITCH TO OFF. REMOVE THE PCA COVER. TURN THE IGNITION KEY TO RUN. USING A VOLTMETER, MEASURE THE VOLTAGE OF THE +5V, +12V AND +/–15V MOTHER BOARD PADS. NOTE: IF +12V IS NOT PRESENT, VERIFY 7.5A FUSE ON APC FILTER STAGE. ARE THE PROPER VOLTAGES (WITHIN +/–10%) PRESENT AT THE PADS?	GO TO STEP 3.	REPLACE LVPS/APC BOARD.*
3	TURN THE IGNITION KEY TO OFF. USING AN OHMMETER, MEASURE THE RESISTANCE BETWEEN THE V LINK (+) AND (–) BUS BARS. IS THE RESISTANCE GREATER THAN 48 Ω?	GO TO STEP 16.	GO TO STEP 4.
4	IS THE RESISTANCE BETWEEN THE V LINK (+) AND (–) BUS BARS LESS THAN 32 Ω?	GO TO STEP 5.	GO TO STEP 11.
5	DISCONNECT PCA C4 AND RECHECK THE RESISTANCE BETWEEN THE V LINK (+) AND (–) BUS BARS. IS THE RESISTANCE GREATER THAN 32 Ω?	VERIFY AND REPAIR THE SHORT IN ONE OF THE LOADS FED BY THE PCA C4 CONNECTOR.*	GO TO STEP 6.
6	REATTACH THE PCA C4 CONNECTOR AND REMOVE THE (–) BUS BAR AT L1 TO THE IGBT (–) BUS BAR. PROBE THE CAPACITOR FOR RESISTANCE. IS THE RESISTANCE LESS THAN 32 Ω ?	REPLACE CAPACITOR.*	GO TO STEP 7.
7	REMOVE ALL THREE IGBT SNUBBER CAPS KEEPING THEM WITH THEIR RESPECTIVE IGBT. MEASURE THE CAPACITANCE OF EACH SNUBBER CAP. IS THE CAPACITANCE EQUAL TO 52 µf ± 10 µf?	GO TO STEP 8.	REPLACE THE EFFECTED SNUBBER CAP AND ITS RELATED IGBT.*
8	DISCONNECT THE DRIVE CONNECTORS FROM THE GATE DRIVE BOARD TO EACH IGBT. MEASURE THE CAPACITANCE BETWEEN THE GATE AND EMITTER TERMINALS OF THE IGBT'S. IS THE MEASURED CAPACITANCE LESS THAN 0.59 µf?	REPLACE THE EFFECTED IGBT.*	GO TO STEP 9.
9	MEASURE THE RESISTANCE OF EACH IGBT FROM THEIR COLLECTOR TO EMITTER TERMINALS. IS THE MEASURED RESISTANCE LESS THAN 1.0 MEGΩ?	REPLACE THE EFFECTED IGBT.*	GO TO STEP 10.
10	MEASURE THE RESISTANCE OF EACH IGBT FROM THE COLLECTOR TO GATE TERMINALS. IS THE RESISTANCE LESS THAN 1.0 MEGΩ?	REPLACE THE EFFECTED IGBT.*	CALL EPIC HOT LINE.*
11	REATTACH PCA C4 AND C5 CONNECTORS. DISCONNECT THE RELAY DRIVE ASSEMBLY J1 CONNECTOR.* INSERT THE PROBING TOOL (MOLEX 70543–0019) ON TO THE HARNESS CONNECTOR. TOUCH THE PROBE LABELED "BATV" TO THE PAD ON THE MOTHERBOARD LABELED "5V". SET IGNITION KEY TO RUN. USING THE SCAN TOOL, READ LINK VOLTAGE. DOES THE SCAN TOOL READ 500VDC?	GO TO STEP 12.	GO TO STEP 13.
12	TOUCH THE PROBE LABELED "BATV" TO THE PAD ON THE MOTHERBOARD LABELED "RTN". USING THE SCAN TOOL, READ LINK VOLTAGE. DOES THE SCAN TOOL READ 0.0VDC?	REPLACE RELAY DRIVE ASSEMBLY.*	GO TO STEP 13.

***Perform Verification TEST VER-1A. **Check connectors - Clean/repair as necessary.**

TEST 33 – PRECHARGE RELAY FAILURE ($03)

STEP	ACTION	YES	NO
13	DISCONNECT THE MOTHER BOARD J1 CONNECTOR.* INSERT THE MOTHERBOARD–PROBING TOOL (MOLEX 14–56–2253) INTO THE CONNECTOR ON THE MOTHERBOARD. TOUCH THE PROBE LABELED “BATV” TO THE PAD ON THE MOTHERBOARD LABELED “5V”. USING THE SCAN TOOL, READ LINK VOLTAGE. DOES THE SCAN TOOL READ 500VDC?	GO TO STEP 14.	GO TO STEP 15.
14	TOUCH THE PROBE LABELED “BATV” TO THE PAD ON THE MOTHERBOARD LABELED “RTN” (SEE DIAGRAM FOR DETAILS). USING THE SCAN TOOL, READ LINK VOLTAGE. DOES THE SCAN TOOL READ 0.0VDC?	REPLACE THE A2A1 CABLE ASSEMBLY.*	GO TO STEP 15.
15	DISCONNECT THE PCA C5 CONNECTOR REPLACE THE CVC BOARD WITH THE CVC I/O PROBING TOOL PROBE FROM THE MOTHER BOARD J1 PIN 22 TO I/O PROBING TOOL PIN 72 FOR CONTINUITY. IS CONTINUITY PRESENT?	REPLACE THE CVC BOARD.*	REPLACE THE MOTHER BOARD.*
16	REMOVE POWER STEERING FUSE. REPLACE COVER ON PDB. REPLACE COVER ON PCA. CLEAR DTC. PERFORM NECESSARY STEPS TO ATTEMPT TO START VEHICLE. DOES VEHICLE START?	GO TO STEP 17.	GO TO STEP 18.
17	DISABLE TRACTION BATTERY PACK BY TURNING THE SERVICE DISCONNECT SWITCH TO OFF. DISCONNECT AND ISOLATE THE AUXILIARY BATTERY NEGATIVE CABLE. REMOVE POWER STEERING PUMP/MOTOR/CONTROLLER (PMC) HIGH VOLTAGE CONNECTOR.** REMOVE PCA C4.** USING AN OHMMETER, MEASURE THE RESISTANCE BETWEEN PCA C4 PINS P AND R. **POWERTRAIN CONTROLLER ASSEMBLY –C4** CAV / COLOR / FUNCTION B / DG / A/C COMPRESSOR SUPPLY C / DG/WT / A/C COMPRESSOR RETURN P / OR / PMC SUPPLY R / OR/WT / PMC RETURN T / VT / OIL PUMP SUPPLY U / VT/WT / OIL PUMP RETURN B P C U R T IS THE CIRCUIT OPEN?	REPLACE POWER STEERING PUMP/MOTOR/ CONTROLLER.	REPAIR SHORT CIRCUIT CONDITION BETWEEN THE HV+ AND HV– WIRES.*
18	DISABLE TRACTION BATTERY PACK BY TURNING THE SERVICE DISCONNECT SWITCH TO OFF. DISCONNECT AND ISOLATE THE AUXILIARY BATTERY NEGATIVE CABLE. REMOVE COVER TO PCA. REPLACE POWER STEERING FUSE. REMOVE OIL PUMP FUSE. REPLACE COVER ON PDB. REPLACE COVER ON PCA. CLEAR DTC. PERFORM NECESSARY STEPS TO ATTEMPT TO START VEHICLE. DOES VEHICLE START?	GO TO STEP 19.	GO TO STEP 20.

***Perform Verification TEST VER-1A. **Check connectors - Clean/repair as necessary.**

TEST 33 – PRECHARGE RELAY FAILURE ($03)

STEP	ACTION	YES	NO
19	DISABLE TRACTION BATTERY PACK BY TURNING THE SERVICE DISCONNECT SWITCH TO OFF. DISCONNECT AND ISOLATE THE AUXILIARY BATTERY NEGATIVE CABLE. REMOVE OIL PUMP HIGH VOLTAGE CONNECTOR.** REMOVE PCA C4.** USING AN OHMMETER, MEASURE THE RESISTANCE BETWEEN PCA C4 PINS T AND U. **POWERTRAIN CONTROLLER ASSEMBLY – C4** CAV / COLOR / FUNCTION B / DG / A/C COMPRESSOR SUPPLY C / DG/WT / A/C COMPRESSOR RETURN P / OR / PMC SUPPLY R / OR/WT / PMC RETURN T / VT / OIL PUMP SUPPLY U / VT/WT / OIL PUMP RETURN 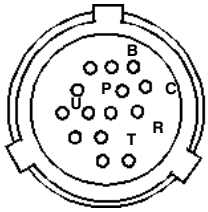 IS THE CIRCUIT OPEN?	REPLACE OIL PUMP.	REPAIR SHORT CIRCUIT CONDITION BETWEEN THE HV+ AND HV– WIRES.*
20	DISABLE TRACTION BATTERY PACK BY TURNING THE SERVICE DISCONNECT SWITCH TO OFF. DISCONNECT AND ISOLATE THE AUXILIARY BATTERY NEGATIVE CABLE. REMOVE COVER TO PCA. REPLACE OIL PUMP FUSE. REMOVE A/C COMPRESSOR FUSE. REPLACE COVER ON PDB. REPLACE COVER ON PCA. CLEAR DTC. PERFORM NECESSARY STEPS TO ATTEMPT TO START VEHICLE. DOES VEHICLE START?	GO TO STEP 21.	CHECK DTC'S FROM OTHER VEHICLE SYSTEMS. IF VEHICLE STILL DOES NOT START, CALL EPIC HOT LINE.*
21	DISABLE TRACTION BATTERY PACK BY TURNING THE SERVICE DISCONNECT SWITCH TO OFF. DISCONNECT AND ISOLATE THE AUXILIARY BATTERY NEGATIVE CABLE. REMOVE A/C COMPRESSOR CONTROLLER HIGH VOLTAGE CONNECTOR.** REMOVE PCA C4.** USING AN OHMMETER, MEASURE THE RESISTANCE BETWEEN PCA C4 PINS B AND C. **POWERTRAIN CONTROLLER ASSEMBLY – C4** CAV / COLOR / FUNCTION B / DG / A/C COMPRESSOR SUPPLY C / DG/WT / A/C COMPRESSOR RETURN P / OR / PMC SUPPLY R / OR/WT / PMC RETURN T / VT / OIL PUMP SUPPLY U / VT/WT / OIL PUMP RETURN 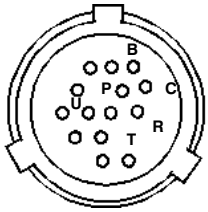 IS THE CIRCUIT OPEN?	REPLACE A/C COMPRESSOR CONTROLLER.	REPAIR SHORT CIRCUIT CONDITION BETWEEN THE HV+ AND HV– WIRES.*

***Perform Verification TEST VER-1A. **Check connectors - Clean/repair as necessary.**

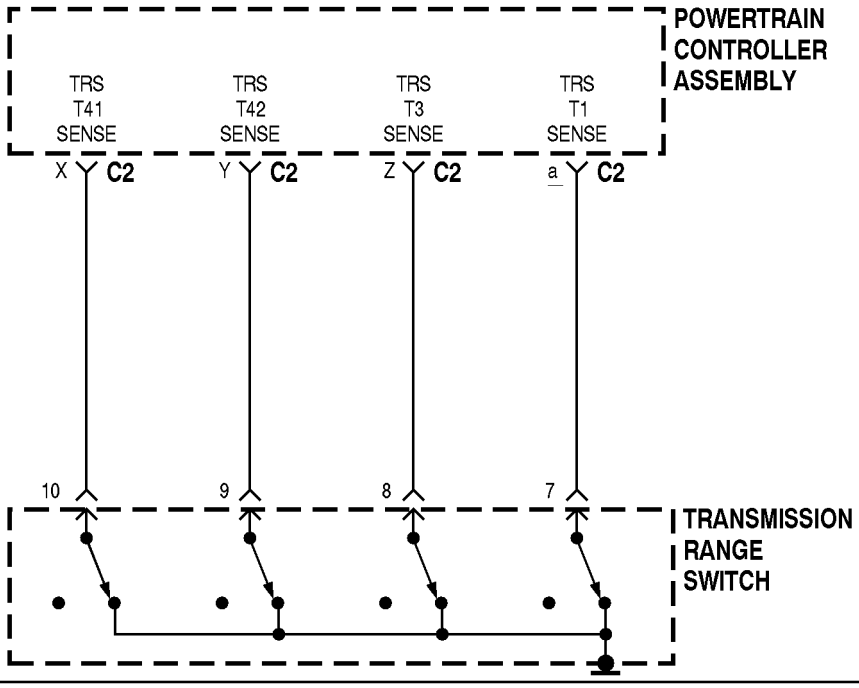

TEST 34 – PRND FAULT ($1A)

Description: The PRND selector has four switches which represent the selected position. Each of the four switches have two positions, switch closure to ground and open. The PCA senses these positions and uses them to determine the drive mode of the vehicle. The valid states for the switches are as follows:

Selection	C4	C3	C2	C1
Park	1	0	0	0
T1	1	0	0	1
Reverse	1	1	0	1
T2	0	1	0	1
Neutral	0	1	0	0
T2	0	1	0	1
Drive	0	1	1	1
T3	0	0	1	1

Detection: When the ignition key is in the RUN position. The four switch inputs representing the PRND position are in an invalid state or an illegal transition is made. An illegal transition would occur if the CVC didn't detect at least one of three consecutive states as the gear selector is passed through a particular region.

WARNING LAMP: THE "SERVICE REQUIRED" LAMP WILL BE ILLUMINATED.

Related Symptoms: The vehicle will default to NEUTRAL while an invalid state exists. If the failure occurred during driving, the READY display will be turned OFF and the "SERVICE REQUIRED" lamp will be illuminated. The vehicle will be disabled and coast to a stop.

Possible Causes: The following are possible causes for the PRND FAULT:

- Faulty PRND switch
- Faulty switch sense circuit
- CVC failure
- Interconnection failure

TEST 34 – PRND FAULT ($1A)

STEP	ACTION	YES	NO
1	HAS TEST 1 BEEN COMPLETED?	GO TO STEP 2.	PERFORM TEST 1.
2	PLACE THE KEY IN THE RUN POSITION AND TOGGLE THE KEY 3 TIMES TO ENTER THE 'BLINKY' DATA PROCESSING MODE MOVE THE PRND SELECTOR TO EACH POSITION AND MONITOR THE 'SERVICE REQUIRED' INDICATOR FOR (ON) STATE AT EACH POSITION. IF ANY OF THE 4 SIGNALS ARE NOT ACTIVE DISCONNECT THE PRND CABLE AT THE PRND SENDER ASSEMBLY AND SHORT EACH PIN TO GROUND WHEN SHORTING THE PINS TO GROUND, DO ALL OF THE INDICATORS LIGHT?	REPLACE THE PRND SWITCH.*	GO TO STEP 3.
3	TURN VEHICLE OFF. DISCONNECT PCA C5 CONNECTOR. OPEN THE PCA AND REPLACE THE CVC BOARD WITH THE CVC I/O PROBING TOOL. DISCONNECT PRND SWITCH. PROBE FOR A SHORT TO GROUND AND OPEN FROM THE PRND SENDER ASSEMBLY CONNECTOR PINS TO RELATED CVC I/O TOOL PINS. REFER TO THE FOLLOWING CHART: PRND — CVC BOARD 10 — 52 9 — 54 8 — 56 7 — 58 TRANSMISSION RANGE SWITCH CAV / COLOR / FUNCTION 7 / LG/BK / TRS T1 SENSE 8 / VT / TRS T3 SENSE 9 / VT/WT / TRS T42 SENSE 10 / BR/YL / TRS T41 SENSE 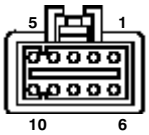 ARE ANY OF THESE PIN COMBINATIONS OPEN OR SHORTED TO GROUND? ARE ANY OF THESE PIN COMBINATIONS OPEN OR SHORTED TO GROUND?	GO TO STEP 4.	REPLACE THE CVC BOARD.*
4	TURN THE KEY OFF. DISCONNECT PCA C2 AND PROBE FOR A SHORT TO GROUND AND OPEN FROM THE PRND SENDER ASSEMBLY CONNECTOR PINS TO RELATED PCA C2 PINS. REFER TO THE FOLLOWING CHART: PRND — PCA C2 10 — X 9 — Y 8 — Z 7 — A POWERTRAIN CONTROLLER ASSEMBLY -C2 CAV / COLOR / FUNCTION X / BR/YL / TRS T41 SENSE Y / VT/WT / TRS T42 SENSE Z / VT / TRS T3 SENSE a / LG/BK / TRS T1 SENSE 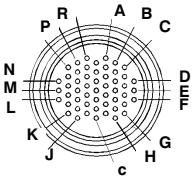 ARE ANY OF THESE PIN COMBINATIONS OPEN OR SHORTED TO GROUND?	REPAIR AS NECESSARY.*	REPLACE THE PCA MOTHER BOARD.*

***Perform Verification TEST VER-1A. **Check connectors - Clean/repair as necessary.**

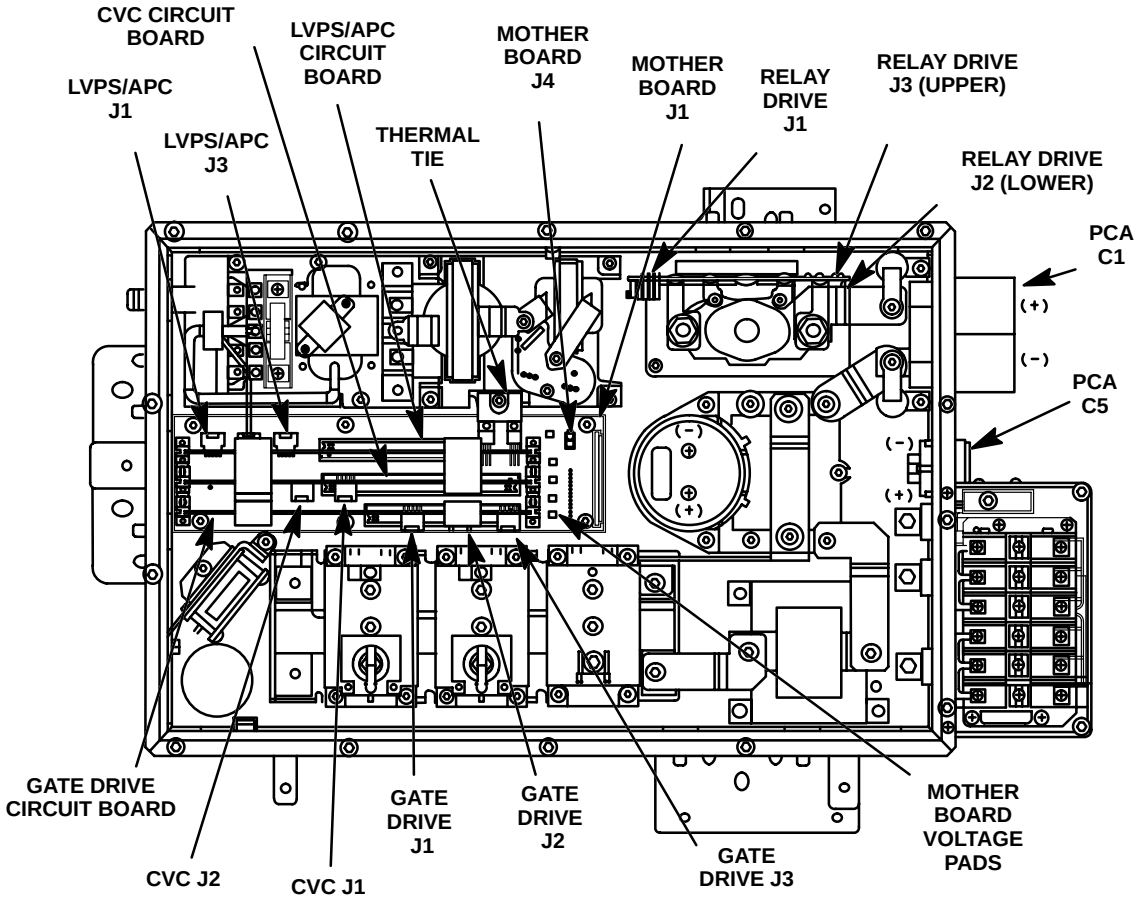

TEST 35 – R/D LOSS FAULT ($14)

Description: The resolver interface circuit will indicate a fault if either the sine or cosine signals from the resolver are not at least 1.8V(RMS).

WARNING LAMP: THE “SERVICE REQUIRED” LAMP WILL BE ILLUMINATED.

Detection: When the ignition key is in the RUN position. The resolver interface circuit has detected the loss of either the sine and/or cosine signal from the resolver.

Related Symptoms: Vehicle will not enter READY mode. If the failure occurred during driving, the READY display will be turned OFF and the “SERVICE REQUIRED” lamp will be illuminated. The vehicle will be disabled and coast to a stop.

Possible Causes: The following are possible causes for the R/D LOSS FAULT:

- Open or shorted wire in the resolver cable
- Faulty resolver
- Faulty resolver interface circuit on the CVC printed circuit board

TEST 35 – R/D LOSS FAULT ($14)

STEP	ACTION	YES	NO
1	HAS TEST 1 BEEN COMPLETED? **NOTE: REFER TO THE PCA–INTERNAL FOLD–OUT SCHEMATIC FOR THE FOLLOWING PROCEDURE.**	GO TO STEP 2.	PERFORM TEST 1
2	USING A VOLTMETER, MEASURE THE VOLTAGE OF THE +5V, +12V AND +/–15V MOTHER BOARD VOLTAGE PADS. ARE THE PROPER VOLTAGES PRESENT AT THE PADS?	GO TO STEP 3.	REPLACE LVPS/APC BOARD.*
3	DISCONNECT PCA C5 CONNECTOR.** REMOVE THE CVC BOARD AND INSTALL THE CVC I/O PROBING TOOL. USING AN OHMMETER, PROBE FOR A SHORT FROM CVC PINS 1, 2, 3, 4, 5 AND 6 TO EACH OTHER, TO CHASSIS GROUND, AND TO CVC I/O PROBING TOOL PIN 8. PROBE FROM CVC PIN 8 TO THE OUTER SHIELD OF THE RESOLVER CABLE AT PCA C5 FOR A SHORT. NOTE: WIGGLE RESOLVER CABLE WHEN TAKING MEASUREMENT TO CHECK FOR INTERMITTENT CONDITION. IS A SHORT PRESENT AT ANY OF THESE CONNECTIONS?	GO TO STEP 4.	GO TO STEP 5.
4	DISCONNECT THE RESOLVER CONNECTOR.** REPEAT STEP 3. IS A SHORT PRESENT AT ANY OF THESE CONNECTIONS?	REPLACE MOTHER BOARD.*	REPLACE RESOLVER.*
5	USING AN OHMMETER, MEASURE THE RESISTANCE BETWEEN CVC I/O PROBING TOOL PINS 1 AND 2. IS THE RESISTANCE APPROXIMATELY 20 – 25 OHMS?	GO TO STEP 6.	REPLACE RESOLVER.*
6	USING AN OHMMETER, MEASURE THE RESISTANCE BETWEEN CVC I/O PROBING TOOL PINS 3 AND 4. IS THE RESISTANCE APPROXIMATELY 70 – 90 OHMS?	GO TO STEP 7.	REPLACE RESOLVER.*
7	USING AN OHMMETER, MEASURE THE RESISTANCE BETWEEN CVC I/O PROBING TOOL PINS 5 AND 6. IS THE RESISTANCE APPROXIMATELY 70 – 90 OHMS?	CALL EPIC HOT LINE.*	REPLACE RESOLVER.*

***Perform Verification TEST VER-1A. **Check connectors - Clean/repair as necessary.**

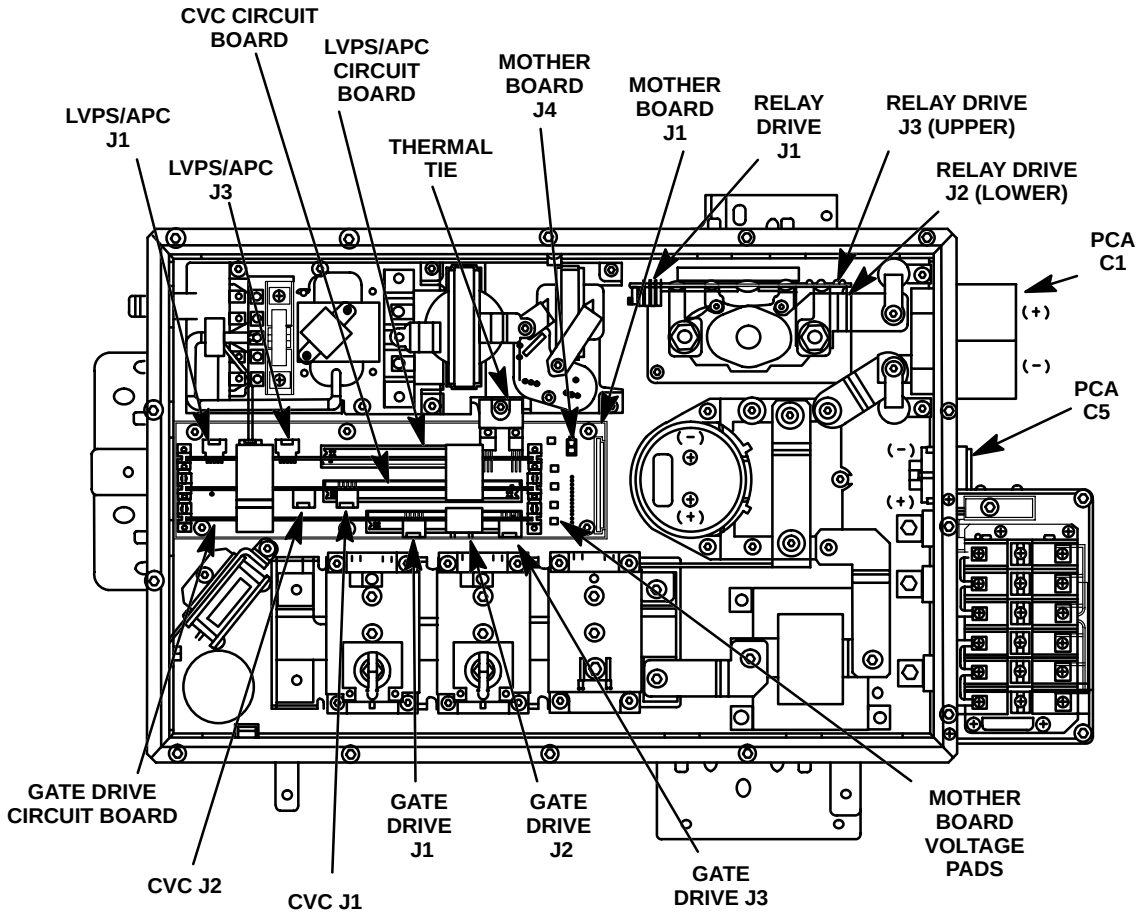

TEST 36 – STUCK RELAY FAULT ($36)

Description: The PCA monitors its link voltage when the precharge and main relays are open. If the link voltage is greater than 50V with the relays open, a stuck relay is assumed and this DTC is set.

WARNING LAMP: THE "SERVICE REQUIRED" LAMP WILL BE ILLUMINATED.

Detection: When the ignition key is in the RUN position, the safety relay is closed, the precharge and main relays are commanded to open, and the link voltage is greater than 50 volts.

Related Symptoms: Vehicle will not enter READY mode.

Possible Causes: The following are possible causes for the STUCK RELAY FAULT:

- Faulty precharge relay or main relay on the relay drive printed circuit board
- Faulty link voltage sense circuit on the relay drive printed circuit board
- Faulty link voltage sense circuit on the CVC printed circuit board

TEST 36 – STUCK RELAY FAULT ($36)

STEP	ACTION	YES	NO
1	HAS TEST 1 BEEN COMPLETED? **NOTE: REFER TO THE PCA–INTERNAL FOLD–OUT SCHEMATIC FOR THE FOLLOWING PROCEDURE.**	GO TO STEP 2.	PERFORM TEST 1.
2	TURN IGNITION OFF. DISABLE THE TRACTION BATTERY PACK BY TURNING THE SERVICE DISCONNECT SWITCH TO OFF. DISCONNECT THE PCA C1 CONNECTOR. REMOVE COVER TO THE PCA. MEASURE THE VOLTAGE AT BIG BLUE. THE VOLTAGE MUST BE LESS THAN 10V. BEFORE CONTINUING. MEASURE THE RESISTANCE ACROSS THE RELAY DRIVE ASSEMBLY MAIN CONTACTS. IS RESISTANCE LESS THAN 50 OHMS?	REPLACE THE RELAY DRIVE ASSEMBLY.*	GO TO STEP 3.
3	WITH THE SCAN TOOL, READ LINK VOLTAGE. DISCONNECT MAIN RELAY DRIVE ASSEMBLY J1 CONNECTOR. TURN IGNITION KEY TO RUN. DOES SCAN TOOL READ LINK VOLTAGE AS 500 VOLTS DC?	GO TO STEP 4.	GO TO STEP 5.
4	INSTALL THE J1 PROBING TOOL (MOLEX 70543–0019) INTO THE HARNESS CABLE CONNECTOR AND SHORT PIN 15 TO CHASSIS GROUND. DOES THE SCAN TOOL READ 0.0VDC?	REPLACE RELAY DRIVE ASSEMBLY.*	GO TO STEP 5.
5	DISCONNECT THE MOTHERBOARD J1 CONNECTOR. DOES THE SCAN TOOL READ LINK VOLTAGE AS 500 VOLTS DC?	REPLACE THE CABLE ASSEMBLY.*	GO TO STEP 6.
6	DISCONNECT THE PCA C5.** REPLACE THE CVC BOARD WITH THE CVC I/O PROBING TOOL. USING AN OHMMETER, PROBE FROM CONNECTOR TEST TOOL (MOLEX 70543–0019) PIN 15 TO CVC I/O PROBING TOOL PIN 72 FOR CONTINUITY. IS THE CIRCUIT OPEN?	REPLACE MOTHER BOARD.*	INSTALL A NEW CVC BOARD.*

***Perform Verification TEST VER-1A. **Check connectors - Clean/repair as necessary.**

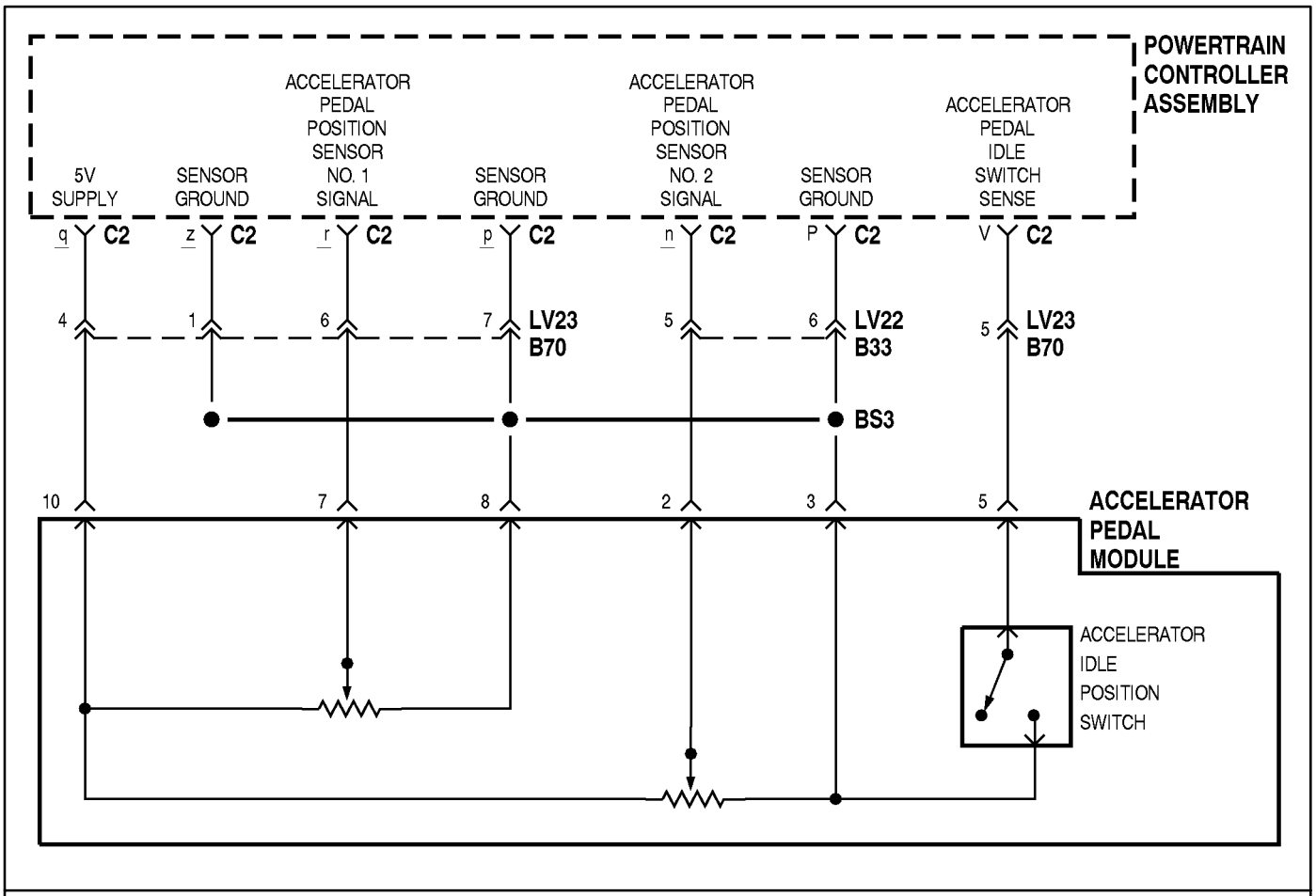

TEST 37 – THROTTLE POSITION SENSOR–1 FAULT ($42), ($43), ($40)

Description: The accelerator position sensor provides a voltage that indicates the position of the accelerator pedal. The PCA senses that voltage and uses it to determine the amount of torque to be commanded to the motor. Nominally, the voltage equals 0.5V for no pedal deflection and 4.5V for full pedal deflection. If the throttle position sensor No. 1 is out of range, the throttle position sensor No. 2 is used and this fault is set.

WARNING LAMP: THE "SERVICE REQUIRED" LAMP WILL BE ILLUMINATED.

Detection: When the ignition key is in the RUN position and the PRND is in either the R or D position, and the accelerator position sensor No. 1 input value is not within the range of 0.2V to 4.8V.

Related DTC's: Throttle Position Sensor–2 Fault, Throttle Position Sensor–1&2 Fault, Accelerator Tolerance Fault.

Possible Causes: The following are possible causes for the THROTTLE POSITION SENSOR–1 FAULT:

- Sensor failure
- Faulty sensor interface circuitry

TEST 37 – THROTTLE POSITION SENSOR–1 FAULT ($42), ($43), ($40)

STEP	ACTION	YES	NO
1	HAS TEST 1 BEEN COMPLETED? **NOTE: REFER TO THE PCA–INTERNAL FOLD–OUT SCHEMATIC FOR THE FOLLOWING PROCEDURE.**	GO TO STEP 2.	PERFORM TEST 1.
2	TURN THE KEY OFF AND DISCONNECT THE PCA C1.** ATTACH THE SCAN TOOL AND SET TO READ ACCELERATOR NO. 1 SENSOR OUTPUT. TURN KEY TO ON. PRESS THE ACCELERATOR PEDAL TO ABOUT 1/2 THROTTLE . DOES THE SCAN TOOL READ GREATER 1.0VDC AND LESS THAN 4.8VDC?	GO TO STEP 3.	GO TO STEP 4.
3	WITH NO PRESSURE ON THE ACCELERATOR PEDAL DOES THE SCAN TOOL READ GREATER THAN 0.2VDC?	GO TO STEP 5.	GO TO STEP 4.
4	DISCONNECT THE CONNECTOR AT THE ACCELERATOR SENSOR PLACE THE KEY IN RUN AND PROBE SENSOR CONNECTOR PINS 8/10. **ACCELERATOR PEDAL CONNECTOR** CAV / COLOR / FUNCTION 2 / WT / ACCELERATOR PEDAL SENSOR NO. 2 SIGNAL 3 / BK/LB / SENSOR GROUND 5 / PK / ACCELERATOR PEDAL IDLE POSITION SWITCH 7 / WT / ACCELERATOR PEDAL SENSOR NO. 1 SIGNAL 8 / BK/LB / SENSOR GROUND 10 / VT/WT / 5V SUPPLY 5 1 10 6 DOES VOLTAGE READ 5VDC?	REPLACE SENSOR.*	GO TO STEP 5.
5	DISCONNECT PCA C2 CONNECTOR AND PROBE FROM 7/8/10 TO C2 PINS R/Q/Z FOR CONTINUITY. **POWERTRAIN CONTROLLER ASSEMBLY – C2** CAV / COLOR / FUNCTION n / WT / ACCELERATOR PEDAL SENSOR NO. 2 SIGNAL P / BK/LB / SENSOR GROUND q / VT/WT / 5V SUPPLY r / WT / ACCELERATOR PEDAL SENSOR NO. 1 SIGNAL z / BK/LB / SENSOR GROUND P R A B C N M L D E F K J c H G IS CONTINUITY PRESENT?	GO TO STEP 6.	REPAIR CIRCUIT BETWEEN ACCELERATOR PEDAL MODULE AND PCA.*

***Perform Verification TEST VER-1A. **Check connectors - Clean/repair as necessary.**

TEST 37 – THROTTLE POSITION SENSOR–1 FAULT ($42), ($43), ($40)

STEP	ACTION	YES	NO
6	PROBE THE PCA MOTHER BOARD (+) 5VDC AND RTN PADS FOR (+) 5VDC. IS (+) 5VDC (+/−10%) PRESENT?	GO TO STEP 7.	INSTALL A NEW APC/LVPS BOARD.*
7	REMOVE THE CVC BOARD AND INSTALL THE CVC I/O PROBING TOOL REATTACH THE PCA C2 AND PROBE FROM ACCELERATOR PIN 7 TO CVC I/O PROBING TOOL PIN 73 FOR CONTINUITY AND FROM ACCELERATOR PINS 8 AND 10 TO RTN AND 5V PADS ON MOTHER BOARD RESPECTIVELY. IS CONTINUITY PRESENT?	INSTALL A NEW CVC BOARD.*	INSTALL A NEW PCA MOTHER BOARD.*

ACCELERATOR PEDAL CONNECTOR

CAV	COLOR	FUNCTION
2	WT	ACCELERATOR PEDAL SENSOR NO. 2 SIGNAL
3	BK/LB	SENSOR GROUND
5	PK	ACCELERATOR PEDAL IDLE POSITION SWITCH
7	WT	ACCELERATOR PEDAL SENSOR NO. 1 SIGNAL
8	BK/LB	SENSOR GROUND
10	VT/WT	5V SUPPLY

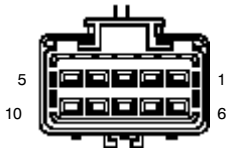

***Perform Verification TEST VER-1A. **Check connectors - Clean/repair as necessary.**

THIS PAGE INTENTIONALLY LEFT BLANK

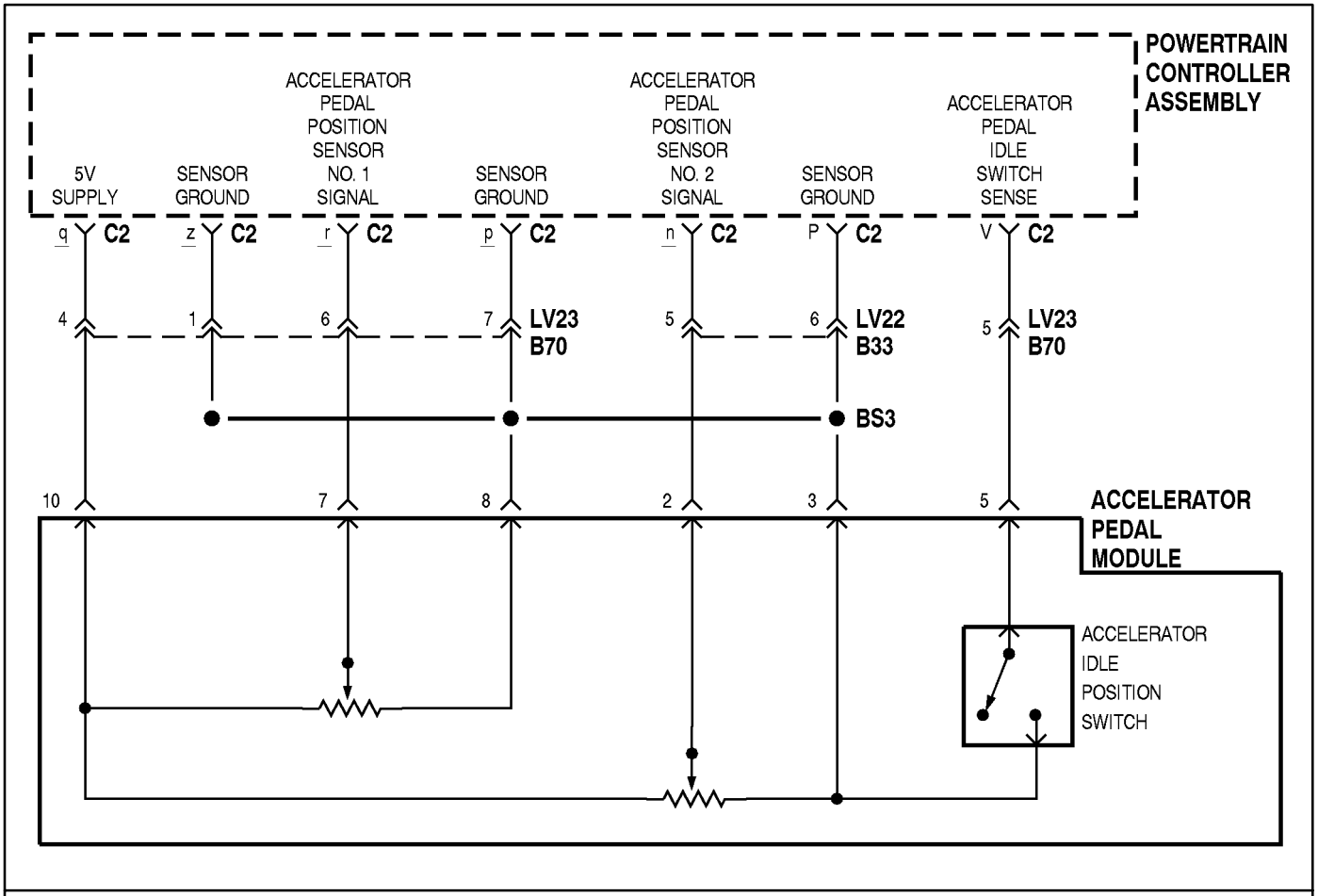

TEST 38 – THROTTLE POSITION SENSOR–2 FAULT ($42), ($43), ($41)

Description: The accelerator position sensor provides a voltage that indicates the position of the accelerator pedal. The PCA senses that voltage and uses it to determine the amount of torque to be commanded to the motor. Nominally, the voltage equals 0.5V for no pedal deflection and 4.5V for full pedal deflection. If the throttle position sensor No. 2 is out of range, the throttle position sensor No. 1 is used and this fault is set.

WARNING LAMP: THE "SERVICE REQUIRED" LAMP WILL BE ILLUMINATED.

Detection: When the ignition key is in the RUN position and the PRND is in either the R or D position, and the accelerator position sensor No. 2 input value is not within the range of 0.2V to 4.8V.

Related DTC's: Throttle Position Sensor–1 Fault, Throttle Position Sensor–1&2 Fault, Accelerator Tolerance Fault.

Possible Causes: The following are possible causes for the THROTTLE POSITION SENSOR–2 FAULT:

- Sensor failure
- Faulty sensor interface circuitry

TEST 38 – THROTTLE POSITION SENSOR–2 FAULT ($42), ($43), ($41)

STEP	ACTION	YES	NO
1	HAS TEST 1 BEEN COMPLETED? **NOTE: REFER TO THE PCA–INTERNAL FOLD–OUT SCHEMATIC FOR THE FOLLOWING PROCEDURE.**	GO TO STEP 2.	PERFORM TEST 1.
2	TURN THE KEY OFF AND DISCONNECT THE PCA C1. ATTACH THE SCAN TOOL AND SET TO READ ACCELERATOR #2 SENSOR OUTPUT. TURN KEY TO ON. PRESS THE ACCELERATOR PEDAL TO ABOUT 1/2 THROTTLE. DOES THE SCAN TOOL READ GREATER 1.0 AND LESS THAN 4.8VDC?	GO TO STEP 3.	GO TO STEP 4.
3	WITH NO PRESSURE ON THE ACCELERATOR PEDAL DOES THE SCAN TOOL READ GREATER THAN 0.2VDC?	GO TO STEP 5.	GO TO STEP 4.
4	DISCONNECT THE CONNECTOR AT THE ACCELERATOR SENSOR PLACE THE KEY IN RUN AND PROBE SENSOR CONNECTOR PINS 3/10. **ACCELERATOR PEDAL CONNECTOR** CAV / COLOR / FUNCTION 2 / WT / ACCELERATOR PEDAL SENSOR NO. 2 SIGNAL 3 / BK/LB / SENSOR GROUND 5 / PK / ACCELERATOR PEDAL IDLE POSITION SWITCH 7 / WT / ACCELERATOR PEDAL SENSOR NO. 1 SIGNAL 8 / BK/LB / SENSOR GROUND 10 / VT/WT / 5V SUPPLY 5 1 10 6 DOES VOLTAGE READ 5VDC?	REPLACE SENSOR.*	GO TO STEP 5.
5	DISCONNECT PCA C2 CONNECTOR AND PROBE FROM 2/3/10 TO C2 PINS N/P/Z FOR CONTINUITY. **POWERTRAIN CONTROLLER ASSEMBLY – C2** CAV / COLOR / FUNCTION n / WT / ACCELERATOR PEDAL SENSOR NO. 2 SIGNAL P / BK/LB / SENSOR GROUND q / VT/WT / 5V SUPPLY r / WT / ACCELERATOR PEDAL SENSOR NO. 1 SIGNAL z / BK/LB / SENSOR GROUND A B C D E F G H c J K L M N P R IS CONTINUITY PRESENT?	GO TO STEP 6.	REPAIR CIRCUIT BETWEEN ACCELERATOR PEDAL MODULE AND PCA.*

***Perform Verification TEST VER-1A. **Check connectors - Clean/repair as necessary.**

TEST 38 – THROTTLE POSITION SENSOR–2 FAULT ($42), ($43), ($41)

STEP	ACTION	YES	NO
6	PROBE THE PCA MOTHER BOARD (+) 5VDC AND RTN PADS FOR (+) 5VDC. IS (+) 5VDC (+/−10%) PRESENT?	GO TO STEP 8.	INSTALL A NEW APC/LVPS BOARD.*
7	REMOVE THE CVC BOARD AND INSTALL THE CVC I/O PROBING TOOL. REATTACH THE PCA C2 AND PROBE FROM ACCELERATOR PIN 3 TO CVC I/O PROBING TOOL PIN 75 FOR CONTINUITY AND FROM ACCELERATOR PINS 3 AND 10 TO RTN PAD AND 5V PAD, RESPECTIVELY, ON MOTHER BOARD. ACCELERATOR PEDAL CONNECTOR CAV / COLOR / FUNCTION 2 / WT / THROTTLE POSITION SENSOR NO. 2 SIGNAL 3 / BK/LB / THROTTLE POSITION SENSOR NO. 2 RETURN 5 / PK / THROTTLE IDLE POSITION SWITCH 7 / WT / THROTTLE POSITION SENSOR NO. 1 SIGNAL 8 / BK/LB / THROTTLE POSITION SENSOR NO. 1 RETURN 10 / VT/WT / 5V SUPPLY 5 1 10 6 IS CONTINUITY PRESENT?	INSTALL A NEW CVC BOARD.*	INSTALL A NEW PCA MOTHER BOARD.*

***Perform Verification TEST VER-1A. **Check connectors - Clean/repair as necessary.**

THIS PAGE INTENTIONALLY LEFT BLANK

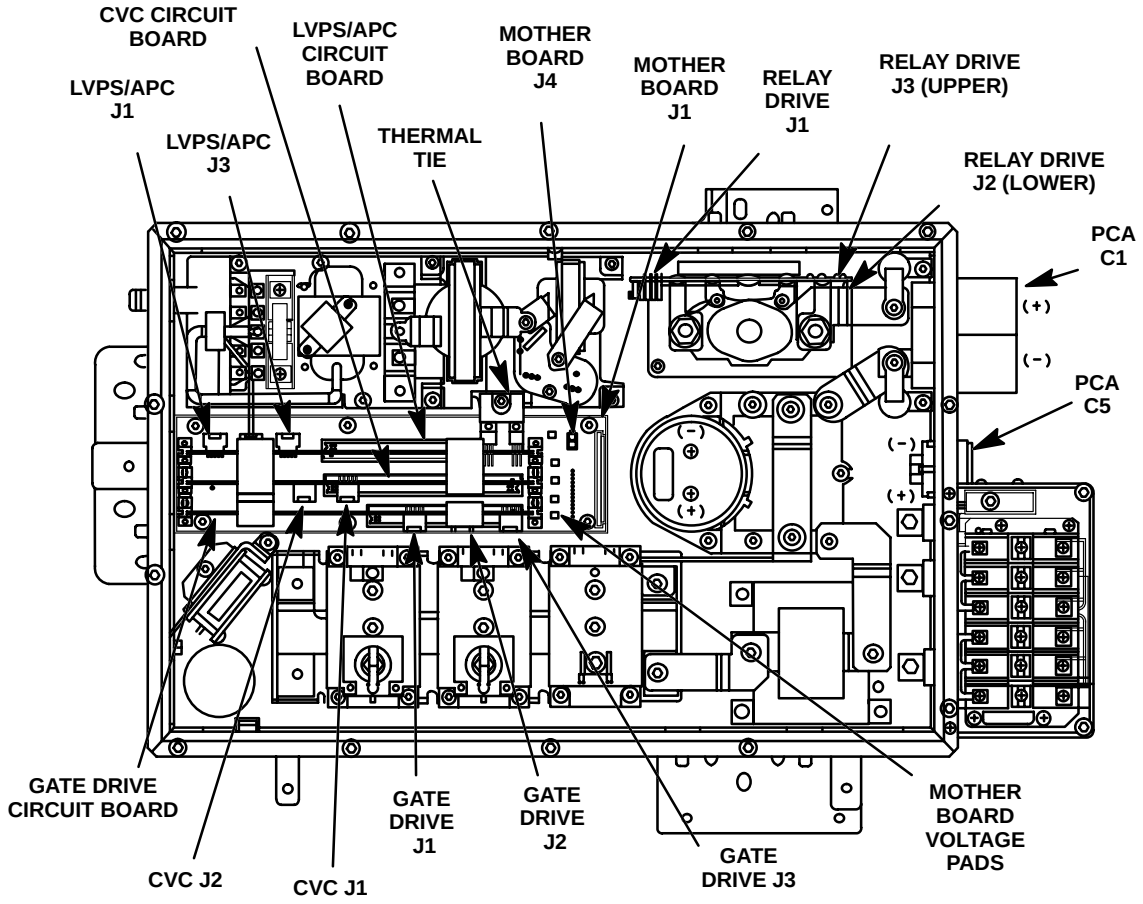

TEST 39 – TRACTION BATTERY VOLTAGE OUT OF RANGE ($01)

Description: During start–up, the PCA first checks that the traction battery voltage is within the correct range of 250V to 410V. If the voltage is not within this range, the PCA will not charge the high voltage link and the vehicle is disabled.

WARNING LAMP: THE “SERVICE REQUIRED” LAMP WILL BE ILLUMINATED.

Detection: When the ignition key is in the START position.

Related Codes:

Related Symptoms: Vehicle will not enter READY mode.

Possible Causes: The following are possible causes for the Precharge Capacitor Failure Fault:

- Traction battery voltage is less than 250V
- Traction battery voltage is greater than 410V
- Traction battery voltage sense circuit is defective on the relay drive printed circuit board
- Traction battery voltage sense circuit is defective on the CVC printed circuit board

TEST 39 – TRACTION BATTERY VOLTAGE OUT OF RANGE ($01)

STEP	ACTION	YES	NO
1	HAS TEST 1 BEEN COMPLETED? **NOTE: REFER TO THE PCA–INTERNAL FOLD–OUT SCHEMATIC FOR THE FOLLOWING PROCEDURE.**	GO TO STEP 2.	PERFORM TEST 1.
2	USING THE SCAN TOOL, VERIFY THAT TRACTION BATTERY VOLTAGE IS BETWEEN 250V AND 410V. IS TRACTION BATTERY VOLTAGE WITHIN THE PROPER RANGE?	GO TO STEP 3.	CHARGE OR DISCHARGE UNTIL VOLTAGE IS WITHIN PROPER RANGE.*
3	DISABLE THE TRACTION BATTERY PACK BY TURNING THE HIGH VOLTAGE SERVICE DISCONNECT SWITCH TO OFF. REMOVE PCA COVER. DISCONNECT RELAY DRIVE BOARD J1 CONNECTOR.** INSERT THE PROBING TOOL (MOLEX 70543–0019) ON TO THE HARNESS CONNECTOR. TOUCH THE PROBE LABELED “BATV” TO THE PAD ON THE MOTHERBOARD LABELED “5V”. TURN IGNITION KEY TO RUN. USING THE SCAN TOOL, READ TRACTION BATTERY VOLTAGE. DOES THE SCAN TOOL READ 500V?	GO TO STEP 4.	GO TO STEP 5.
4	TOUCH THE PROBE LABELED “BATV” TO THE PAD ON THE MOTHERBOARD LABELED “RTN”. USING THE SCAN TOOL, READ TRACTION BATTERY VOLTAGE. DOES THE SCAN TOOL READ 0.0V?	REPLACE RELAY DRIVE BOARD.*	GO TO STEP 5.
5	DISCONNECT MOTHER BOARD J1 CONNECTOR.** INSERT THE MOTHERBOARD–PROBING TOOL (MOLEX 14–56–2253) INTO THE CONNECTOR ON THE MOTHERBOARD. TOUCH THE PROBE LABELED “BATV” TO THE PAD ON THE MOTHERBOARD LABELED “5V”. USING THE SCAN TOOL, READ TRACTION BATTERY VOLTAGE. DOES THE SCAN TOOL READ 500V?	GO TO STEP 6.	GO TO STEP 7.
6	TOUCH THE PROBE LABELED “BATV” TO THE PAD ON THE MOTHERBOARD LABELED “RTN”. USING THE SCAN TOOL, READ TRACTION BATTERY VOLTAGE. DOES THE SCAN TOOL READ 0.0V?	REPLACE A2A1 CABLE ASSEMBLY.*	GO TO STEP 7.
7	TURN IGNITION TO OFF. REMOVE CVC BOARD AND REPLACE WITH THE CVC I/O PROBING TOOL. USING AN OHMMETER, PROBE FOR CONTINUITY BETWEEN CVC I/O TOOL PIN 74 AND MOTHER BOARD J1 PIN 21. IS CONTINUITY PRESENT?	REPLACE CVC BOARD.*	REPLACE MOTHER BOARD.*

***Perform Verification TEST VER-1A. **Check connectors - Clean/repair as necessary.**

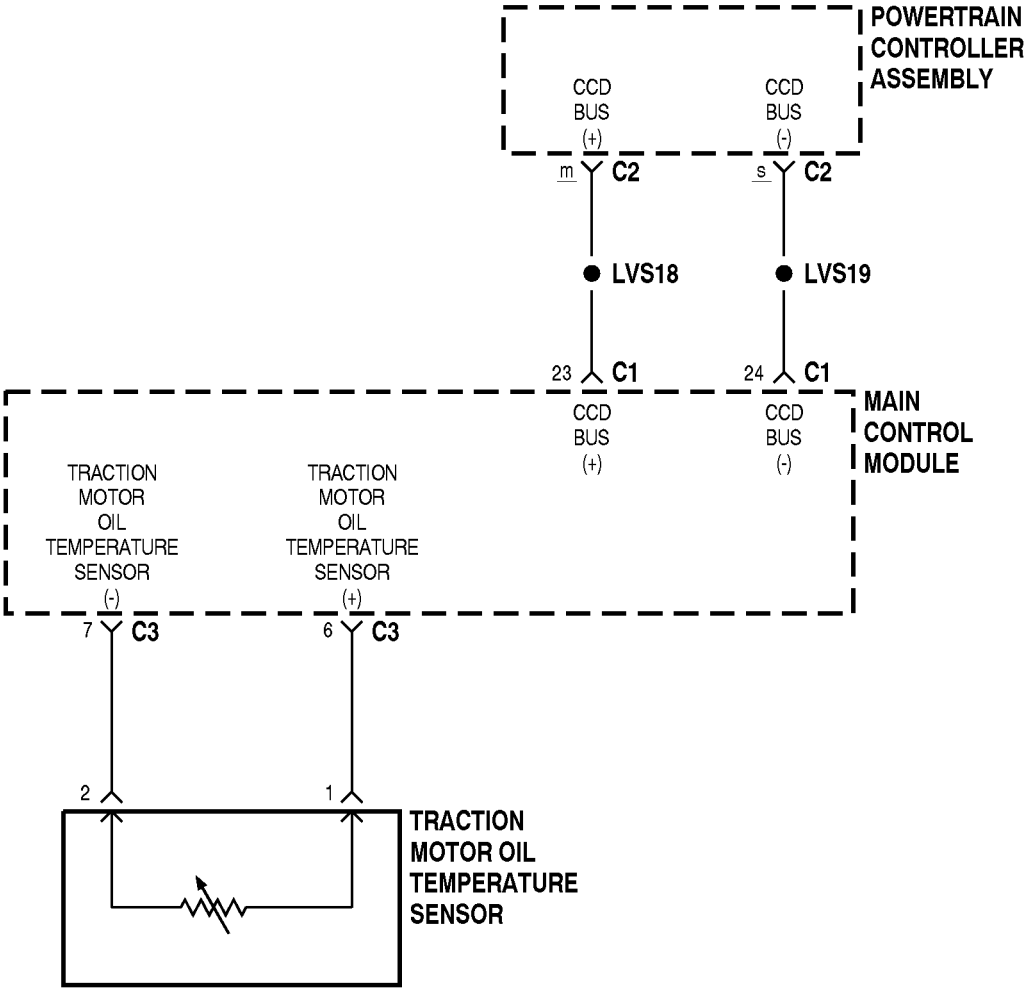

TEST 40 – TRACTION MOTOR TEMPERATURE OUT OF RANGE

Description: The traction motor temperature sensor is monitored by the Main Control Module (MCM). The MCM reports the traction motor temperature to the PCA over the CCD bus.

WARNING LAMP: THE "SERVICE REQUIRED" LAMP WILL BE ILLUMINATED.

Detection: Whenever the vehicle is in the Ready mode.

Possible Causes:

- Traction motor temperature sensor or wiring open
- Traction motor temperature sensor or wiring shorted
- Defective MCM
- Faulty oil pump

TEST 40 – TRACTION MOTOR TEMPERATURE OUT OF RANGE

STEP	ACTION	YES	NO
1	HAS TEST 1 BEEN COMPLETED?	GO TO STEP 2.	PERFORM TEST 1.
2	IS THE PCA REPORTING ANY OIL PUMP DTC'S?	REPAIR OIL PUMP CODES FIRST.*	GO TO STEP 3.
3	IS THE BEMS™ REPORTING ANY TRACTION MOTOR TEMPERATURE SENSOR DTC'S?	REPAIR TRACTION MOTOR TEMPERATURE SENSOR CODES FIRST.*	CALL EPIC HOT LINE.*

***Perform Verification TEST VER-1A. **Check connectors - Clean/repair as necessary.**

TEST VER–1A – VERIFICATION TEST

1. Leave the Scan Tool connected to the Data Link Connector (DLC).

   Reconnect any disconnected components.

   Reconnect Auxiliary Battery Negative Cable (if disconnected).

   Enable the Traction Battery Pack by turning the Service Disconnect Switch to the On position.

   Place vehicle in Ready Mode.

   With the Scan Tool, erase all trouble codes.

2. Road test the vehicle.

3. Check for trouble codes after the road test.

   If a trouble code sets during the road test, perform TEST 1.

   If no trouble codes were set during the test, return the vehicle to the customer.

NO START CONDITION

STEP	ACTION	YES	NO
1.	HAS TEST 1 BEEN COMPLETED?	GO TO STEP 2.	PERFORM TEST 1.
2.	IS THE CHARGE PLUG DOOR CLOSED?	GO TO STEP 3.	CLOSE DOOR AND RETEST VEHICLE.*
3.	IS THE CHECK PLUG INDICATOR LAMP ON?	GO TO STEP 13.	GO TO STEP 4.
4.	INSPECT THE INERTIA SWITCH TO VERIFY THAT IT HAS NOT BEEN TRIPPED. WAS THE INERTIA SWITCH TRIPPED?	GO TO STEP 5.	GO TO STEP 6.
5.	RESET INERTIA SWITCH. ATTEMPT TO PLACE THE VEHICLE IN READY MODE. DOES THE VEHICLE ENTER READY MODE?	REPAIR SUCCESSFUL.*	GO TO STEP 6.
6.	ARE THERE ANY OTHER BATTERY ENERGY MANAGEMENT SYSTEM (BEMS) OR POWERTRAIN CONTROLLER ASSEMBLY (PCA) TROUBLE CODES PRESENT?	REFER TO APPROPRIATE DIAGNOSTIC PROCEDURE(S).*	GO TO STEP 7.
7.	IS THERE A BOX AROUND THE “P” ON THE PRND?	PERFORM PCA TEST 24.*	GO TO STEP 8.
8.	CHECK 7.5 AMP FUSE INSIDE PCA ON APC FILTER ASSEMBLY. IS THE FUSE OPEN?	GO TO STEP 12.	GO TO STEP 9.
9.	CHECK FOR 5 VOLTS AT THE VOLTAGE TEST POINT ON THE MOTHERBOARD OF THE PCA. IS 5 VOLTS PRESENT ON THE MOTHERBOARD?	REPLACE CVC BOARD.*	GO TO STEP 10.
10.	REMOVE CVC BOARD AND RE–TEST FOR 5 VOLTS. IS 5 VOLTS PRESENT ON THE MOTHERBOARD?	REPLACE CVC BOARD.*	GO TO STEP 11.
11.	REMOVE THE GATE DRIVE BOARD AND RE–TEST FOR 5 VOLTS. IS 5 VOLTS PRESENT ON THE MOTHERBOARD?	REPLACE GATE DRIVE BOARD.*	REPLACE THE APC/LVPS BOARD.*
12.	INSPECT RELAY DRIVE BOARD, APC/LVPS, CVC, AND GATE DRIVE BOARDS FOR PHYSICAL DAMAGE. ARE ANY OF THE PC BOARDS DAMAGED?	REPLACE DAMAGED BOARD(S) AND FUSE.*	REPLACE FUSE. IF CONDITION IS STILL PRESENT, CALL EPIC HOT LINE.*
13.	DISABLE THE TRACTION BATTERY PACK BY TURNING THE SERVICE DISCONNECT SWITCH TO OFF. REMOVE BATTERY INTERFACE CENTER (BIC) CONNECTOR C4.** USING A VOLTMETER, MEASURE THE VOLTAGE BETWEEN PIN 2 INTO THE HARNESS AND CHASSIS GROUND. **BATTERY INTERFACE CENTER -C4** CAV / COLOR / FUNCTION 1 / WT / PILOT LINE 2 / RD / CHARGE SWITCH OUTPUT N / OR/BK / DC (–) P / OR / DC (+) P N 1 2 IS THE VOLTAGE GREATER THAN 10.0 VOLTS?	REPLACE CHARGE PLUG DOOR SWITCH.*	CALL EPIC HOT LINE.*

***Perform Verification TEST VER-1A. **Check connectors - Clean/repair as necessary.**

NO CHARGE CONDITION

STEP	ACTION	YES	NO
1.	HAS TEST 1 BEEN COMPLETED?	GO TO STEP 2.	PERFORM TEST 1.
2.	INSPECT THE INERTIA SWITCH TO VERIFY THAT IT HAS NOT BEEN TRIPPED. WAS THE INERTIA SWITCH TRIPPED?	GO TO STEP 3.	GO TO STEP 4.
3.	RESET INERTIA SWITCH. ATTEMPT TO PLACE THE VEHICLE IN CHARGE MODE. DOES THE VEHICLE ENTER CHARGE MODE?	REPAIR SUCCESSFUL.*	GO TO STEP 4.
4.	MAKE VISUAL INSPECTION OF EVSE BOX OPERATION BY PERFORMING STEPS OUTLINED ON UNIT. DOES UNIT OPERATE PROPERLY?	GO TO STEP 5.	CALL EPIC HOT LINE.*
5.	REFER TO TROUBLE CODES RECORDED DURING PRE–DIAGNOSTIC CHECKOUT TEST 1. WERE THERE ANY CODES REPORTED DURING PRE–DIAGNOSTIC CHECKOUT TEST 1?	REFER TO APPROPRIATE TROUBLE CODE DIAGNOSTIC PROCEDURE(S).*	GO TO STEP 6.
6.	DISABLE THE TRACTION BATTERY PACK BY TURNING THE SERVICE DISCONNECT SWITCH TO THE OFF POSITION. DISCONNECT MCM – C1.** USING AN OHMMETER, PROBE FROM CHARGE PORT PIN 6 TO MCM – C1 PIN 17 FOR CONTINUITY. IS CONTINUITY PRESENT?	CALL EPIC HOT LINE.*	GO TO STEP 7.
7.	DISCONNECT BIC – C3.** USING AN OHMMETER, PROBE FROM MCM – C1 PIN 17 AND BIC – C3 PIN W FOR CONTINUITY. IS CONTINUITY PRESENT?	GO TO STEP 8.	REPAIR OPEN IN AC PILOT CIRCUIT.*
8.	DISCONNECT BIC – C4.** USING AN OHMMETER, PROBE FROM BIC – C4 PIN 1 TO CHARGE PORT PIN 6 FOR CONTINUITY. IS CONTINUITY PRESENT?	REPLACE BIC.*	REPAIR OPEN IN AC PILOT CIRCUIT.*

***Perform Verification TEST VER-1A. **Check connectors - Clean/repair as necessary.**

COMPONENT SERVICE

ACCELERATOR PEDAL

DESCRIPTION

The accelerator pedal in the EPIC looks and operates similar to the gasoline version, but is very different. The EPIC accelerator pedal controls the traction motor speed by electrical signal. The pedal has two modules that control the signals sent to the PCA. The PCA then controls the current to the traction motor. The accelerator pedal and modules are replaced as an assembly.

REMOVAL

(1) Disable the traction battery pack by turning the high voltage service disconnect switch to Off.
(2) Disconnect and isolate auxiliary battery negative cable.
(3) Disconnect accelerator pedal module connector (Fig.1).

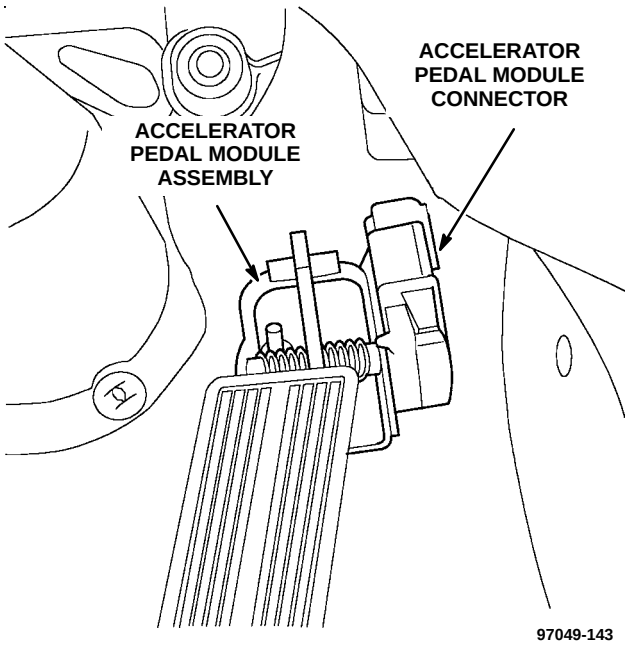

Fig. 1 Accelerator Pedal

(4) Remove accelerator pedal mounting nuts (2).
(5) Remove accelerator pedal assembly.

INSTALLATION

(1) Install accelerator pedal assembly.
(2) Torque mounting nuts to 11 N•m (97 in. lbs.).
(3) Connect accelerator pedal module connector
(4) Connect auxiliary battery negative cable.
(5) Enable the traction battery pack by turning the high voltage service disconnect switch to On.

AUXILIARY POWER CONVERTER (APC) COLD PLATE

DESCRIPTION

The APC cold plate is mounted inside the PCA on the bottom. Its purpose is to cool the APC assembly. The cooling is done by circulating the battery pack coolant through the cold plate.

REMOVAL

(1) Disable the traction battery pack by turning the high voltage service disconnect switch to Off.
(2) Disconnect and isolate the auxiliary battery negative cable.
(3) Remove PCA. Refer to “Powertrain Controller Assembly” removal procedures in this group.
(4) Remove crossover hose from the coolant line fitting, and the fitting attaching to the APC cold plate under the PCA (Fig. 2).

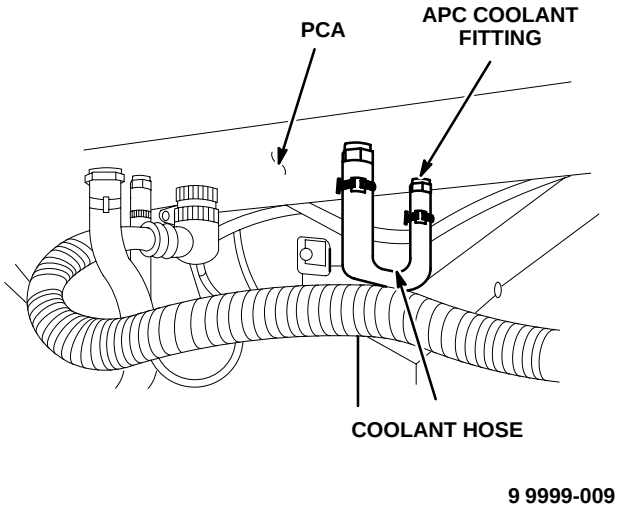

Fig. 2 APC Cold Plate Coolant Line

APC COLDPLATE (Continued)

(5) Remove the Low Voltage Power Supply/ Auxiliary Power Converter (LVPS/APC) circuit board (Fig. 3). Refer to “LVPS/APC Circuit Board” removal procedures in this group.

(6) Remove APC filter stage assembly. “Refer to APC Filter Stage Removal” procedures in this group.

(7) Remove APC power stage assembly. “Refer to APC Power Stage Removal” procedures in this group.

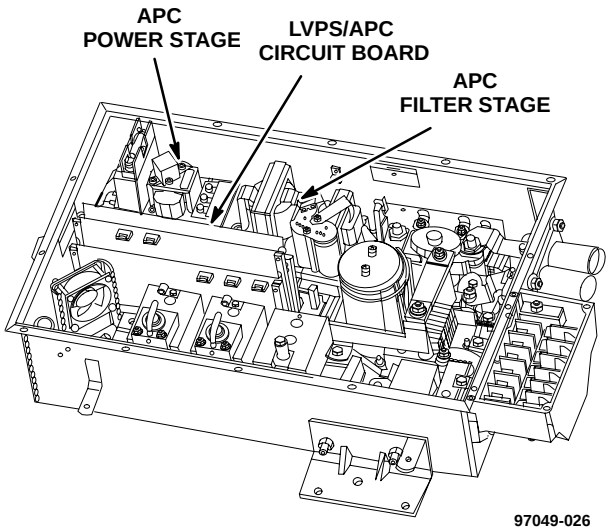

Fig. 3 LVPS/APC Circuit Board

(8) Remove APC cold plate (Fig. 4).

(9) Remove and discard old thermal pads.

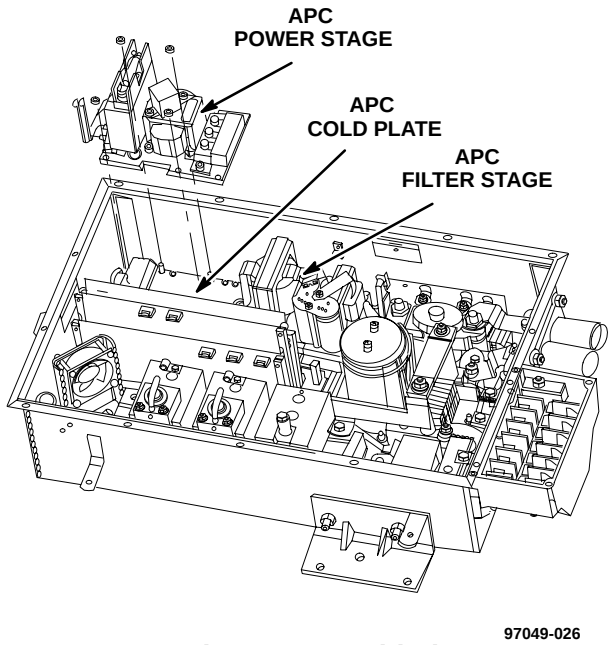

Fig. 4 APC Cold plate

INSTALLATION

(1) Install new thermal pads (remove paper backing from both sides before installation).

NOTE: Always replace thermal pads when removing APC power stage assembly.

(2) Install APC cold plate.

NOTE: Apply Fel–Pro® Sealant on threads before installing fittings on APC cold plate.

(3) Install APC cold plate fittings and reattach hoses underneath the PCA.

(4) Install APC power stage assembly. Refer to “APC Power Stage Installation” procedures in this group.

(5) Install APC filter stage assembly. Refer to “APC Filter Stage Installation” procedures in this group.

(6) Install the LVPS/APC circuit board. Refer to “LVPS/APC Circuit Board Removal” procedures in this group.

(7) Install coolant fittings to the APC cold plate under the PCA and reattach hoses.

(8) Install PCA. Refer to “PCA Removal and Installation” procedure in this group.

(9) Connect the auxiliary battery negative cable.

(10) Enable the traction battery pack by turning the high voltage service disconnect switch to On.

AUXILIARY POWER CONVERTER (APC) FILTER STAGE ASSEMBLY

REMOVAL

(1) Disable the traction battery pack by turning the high voltage service disconnect switch to Off.

(2) Disconnect and isolate the auxiliary battery negative cable.

(3) Remove cover to Power Distribution Box on the Powertrain Controller Assembly (PCA).

(4) Remove bolts (12) attaching PCA cover to PCA.

APC FILTER STAGE ASSEMBLY (Continued)

(5) Remove the Low Voltage Power Supply/ Auxiliary Power Converter (LVPS/APC) circuit board (Fig. 5). Refer to “LVPS/APC Circuit Board Removal” procedures in this group.

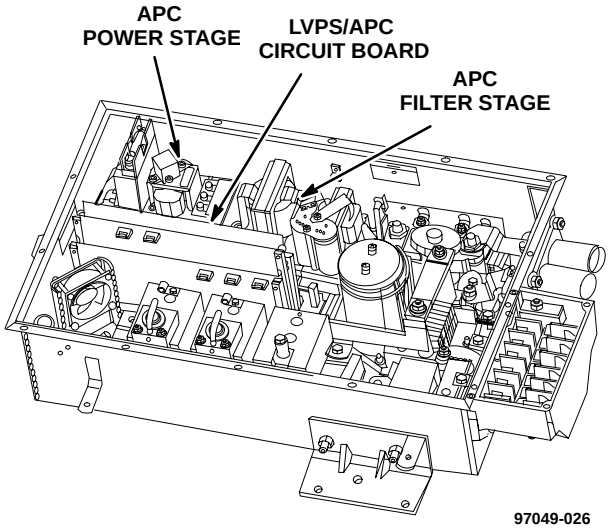

Fig. 5 LVPS/APC Circuit Board

(6) Mark position and remove all leads from front mounting studs (+,–) on APC filter stage assembly (Fig. 6).

(7) Remove the one–pin connector on APC filter stage assembly from PCA mother board.

(8) Cut tie strap surrounding inductor wires on APC power stage assembly.

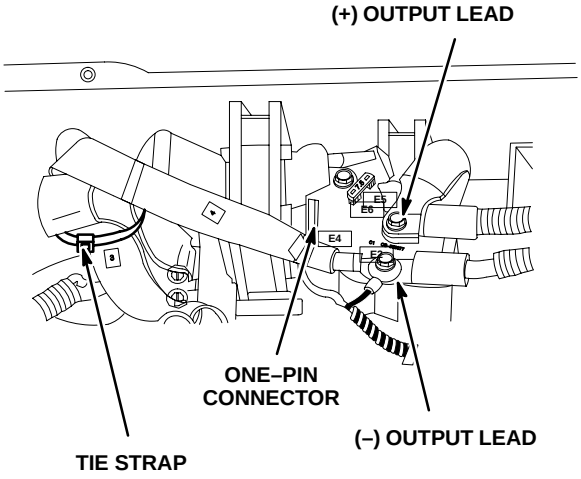

Fig. 6 APC Output Leads

(9) Remove the center bolt and washer retaining the inductor lead from the APC filter stage assembly to the APC power output stage center terminal (fig. 7).

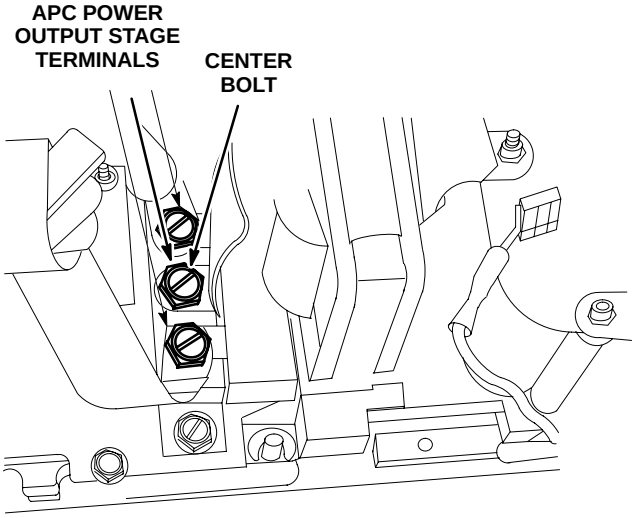

Fig. 7 APC Power Output Stage Terminals

(10) Remove APC filter stage assembly mounting nuts (4).

(11) Remove APC filter stage assembly.

INSTALLATION

(1) Install APC filter stage assembly.

(2) Install mounting washers and nuts (4) and leave loose.

(3) Install the center bolt and washer retaining the inductor lead from the APC filter stage assembly to the APC power output stage terminal. Torque to 3 N•m (27 in. lbs.).

(4) Install a new tie strap surrounding inductor wires on APC power stage assembly (Fig. 8).

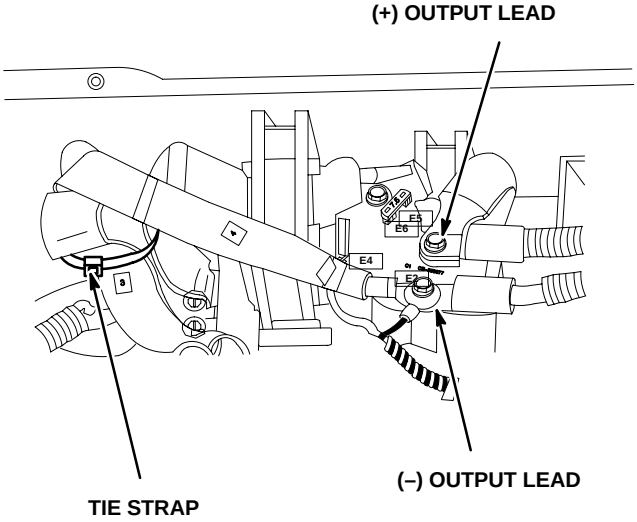

Fig. 8 APC Inductor Leads

APC FILTER STAGE ASSEMBLY (Continued)

(5) Install connector on APC filter stage assembly from PCA mother board.
(6) Install all leads on studs (+,–) on APC filter stage assembly.
(7) Install the LVPS/APC circuit board. Refer to “LVPS/APC Circuit Board Installation” procedures in this group.
(8) Torque APC filter stage assembly mounting nuts (4) to 2 N•m (18 in. lbs.).
(9) Install PCA cover.
(10) Install bolts (12) attaching PCA cover to PCA. Torque to 2 N•m (18 in. lbs.).
(11) Install cover to Power Distribution Box on the PCA.
(12) Connect the auxiliary battery negative cable.
(13) Enable the traction battery pack by turning the high voltage service disconnect switch to On.

AUXILIARY POWER CONVERTER (APC) POWER STAGE ASSEMBLY

DESCRIPTION

The APC assembly is made up of two components: the APC filter stage and the APC power stage.

OPERATION

The APC assembly converts the high voltage current from the traction batteries to low voltage (12 volts) to power the vehicle lights and accessories. The APC is in parallel with the auxiliary battery to supply the vehicle electrical loads and to maintain the charge of the auxiliary battery. A temperature sensor located in front of the auxiliary battery is directly connected to the Auxiliary Power Converter/ Low Voltage Power Supply (APC/LVPS) circuit board. This temperature input is used to regulate the APC output voltage. The Battery Energy Management System (BEMS) switches the APC on and off during the drive and charge modes. The maximum current sourced by the APC is 100 amps.

REMOVAL

(1) Disable the traction battery pack by turning the high voltage service disconnect switch to Off.
(2) Disconnect and isolate the auxiliary battery negative cable.
(3) Remove cover to Power Distribution Box on the Powertrain Controller Assembly (PCA).
(4) Remove bolts (12) attaching PCA cover to PCA.
(5) Remove the LVPS/APC circuit board (Fig. 9). Refer to “LVPS/APC Circuit Board” removal procedures in this group.

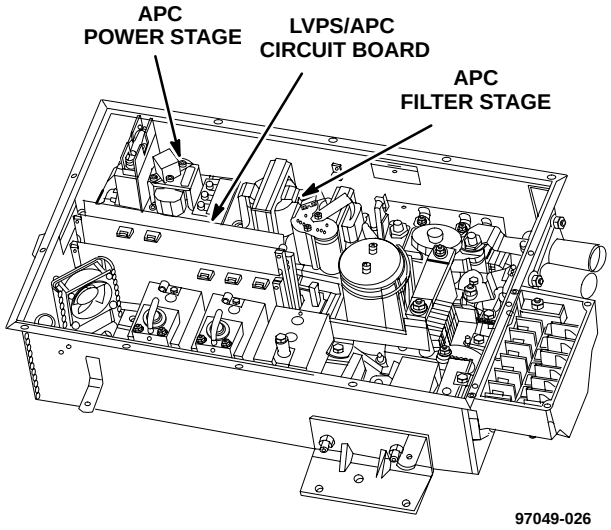

Fig. 9 LVPS/APC Circuit Board

(6) Remove the APC filter stage Assembly. Refer to “APC Filter Stage Removal” procedures in this group.
(7) Disconnect leads (2) at APC power stage assembly from PCA C1 terminal studs (Fig. 10).

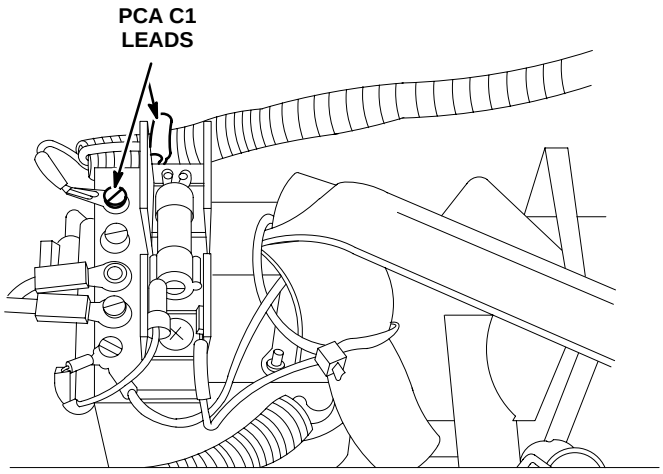

Fig. 10 APC Power Stage Leads

(8) Remove nuts (4) mounting APC power stage assembly to PCA base plate.
(9) Remove APC power stage assembly.

APC POWER STAGE ASSEMBLY (Continued)

(10) Remove and discard old thermal pads on APC cold plate.

INSTALLATION

NOTE: Always replace thermal pads when removing APC power stage assembly.

(1) Install new thermal pads (remove paper backing from both sides before installation).
(2) Install APC power stage assembly.
(3) Install APC power stage assembly mounting nuts (4). Torque to 2 N•m (18 in. lbs.).
(4) Install APC filter stage assembly.
(5) Install APC filter stage assembly mounting nuts and leave loose.
(6) Connect leads (2) at APC power stage assembly from PCA C3 terminal studs.
(7) Install washers and bolt retaining the inductor lead from the APC filter stage assembly to the APC power output stage center terminal. Torque to 4 N•m (35 in. lbs.).
(8) Install connector on APC filter stage assembly from PCA mother board.
(9) Install all leads on front studs (2) on APC filter stage assembly.
(10) Install a new tie strap surrounding inductor wires on APC power stage assembly.
(11) Install the LVPS/APC circuit board. Refer to “LVPS/APC Circuit Board” installation procedures in this group.
(12) Torque APC filter stage assembly mounting nuts (4) to 2 N•m (18 in. lbs.).
(13) Install connectors (2) on the LVPS/APC circuit board from APC power stage assembly.
(14) Install PCA cover.
(15) Install bolts (12) attaching PCA cover to PCA. Torque to 2 N•m (18 in. lbs.).
(16) Install cover to Power Distribution Box on the PCA.
(17) Connect the auxiliary battery negative cable.
(18) Enable the traction battery pack by turning the high voltage service disconnect switch to On.

CHASSIS VECTOR CONTROLLER (CVC) CIRCUIT BOARD

DESCRIPTION

The CVC circuit board sends a Pulse Width Modulation (PWM) signal to the gate drives for each of the three IGBT’s to control the speed of the traction motor. The CVC board also monitors the resolver, oil pressure, charge and discharge conditions, over current, high and low voltage circuits.

The following lists CVC inputs and outputs:

INPUTS	OUTPUTS
PRND Switch	oil pump control
brake pressure switch	message center
accelerator pedal sense	lamps
ignition switch	safety relay open
oil pressure switch	request line
REGEN enable/disable	

REMOVAL

(1) Disable the traction battery pack by turning the high voltage service disconnect switch to Off.
(2) Disconnect and isolate the auxiliary battery negative cable.
(3) Remove cover to Power Distribution Box on the Powertrain Controller Assembly (PCA).
(4) Remove bolts (12) attaching PCA cover to PCA.
(5) Disconnect the current sensor connectors (2) from the CVC circuit board (Fig. 11).

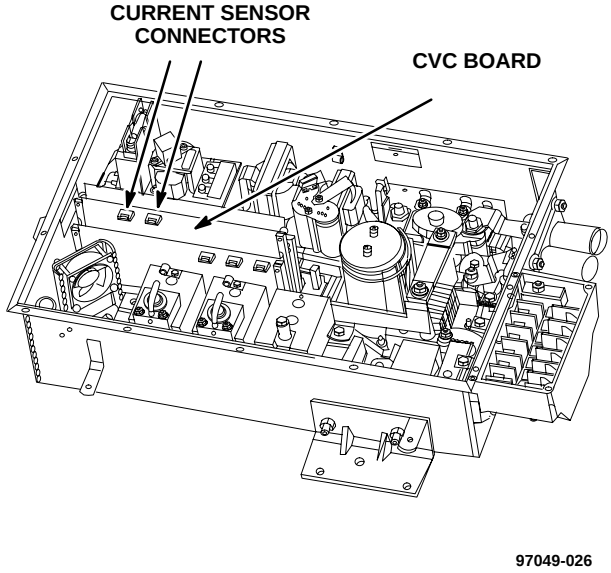

Fig. 11 CVC Board

(6) Release both ends of the CVC circuit board from its support rails by pressing the round retainer buttons toward the circuit board.
(7) Slide the CVC circuit board up the support rails to remove.

CVC CIRCUIT BOARD (Continued)

INSTALLATION

(1) Install the CVC circuit board by sliding the circuit board down the support rails.
(2) Connect the current sensor connectors.
(3) Install PCA cover.
(4) Install bolts (12) attaching PCA cover to PCA. Torque to 2 N•m (18 in. lbs.).
(5) Install cover to Power Distribution Box on the PCA.
(6) Connect the auxiliary battery negative cable.
(7) Enable the traction battery pack by turning the high voltage service disconnect switch to On.

CURRENT SENSOR

DESCRIPTION

There are two Current Sensors and they are located on top of two IGBT's. The Current Sensors monitor IGBT output to the traction motor. The CVC board monitors the Current Sensors for control feedback.

REMOVAL

(1) Disable the traction battery pack by turning the high voltage service disconnect switch to Off.
(2) Disconnect and isolate the auxiliary battery negative cable.
(3) Remove cover to Power Distribution Box on the Powertrain Controller Assembly (PCA).
(4) Remove bolts (12) attaching PCA cover to PCA.
(5) Disconnect phase wires (2) (A&C) and mark position (Fig. 12).

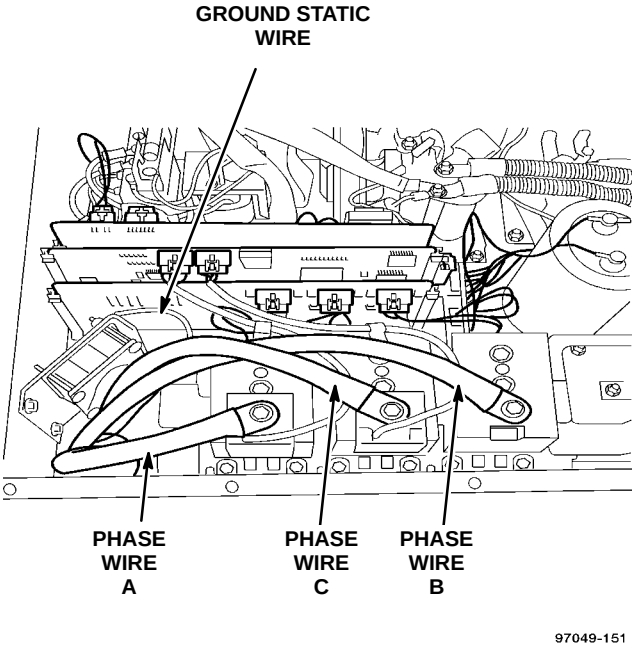

Fig. 12 Phase Wires

(6) Disconnect current sensor connector(s) at the Chassis Vector Controller (CVC) circuit board (Fig. 13).

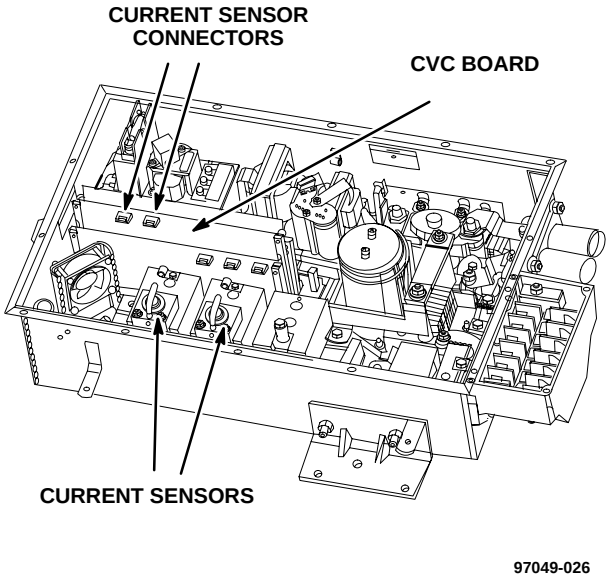

Fig. 13 Current Sensors

CURRENT SENSOR (Continued)

(7) Remove current sensor(s) (Fig. 14).

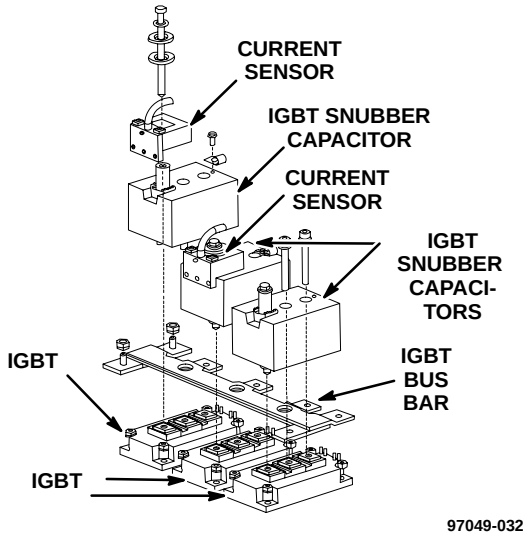

Fig. 14 IGBT Assemblies

INSTALLATION

(1) Install current sensor(s).
(2) Connect current sensor connectors at the CVC circuit board.
(3) Connect phase wires (2). Torque to 8 N•m (71 in. lbs.).
(4) Install PCA cover.
(5) Install bolts (12) attaching PCA cover to PCA. Torque to 2 N•m (18 in. lbs.).
(6) Install cover to Power Distribution Box on the PCA.
(7) Connect the auxiliary battery negative cable.
(8) Enable the traction battery pack by turning the high voltage service disconnect switch to On.

FILTER ASSEMBLY

DESCRIPTION

The “big blue” filter assembly is used in conjunction with the L1 inductor assembly to filter switching noise generated by the IGBT’s.

REMOVAL

(1) Disable the traction battery pack by turning the high voltage service disconnect switch to Off.
(2) Disconnect and isolate the auxiliary battery negative cable.
(3) Remove cover to Power Distribution Box on the Powertrain Controller Assembly (PCA).
(4) Remove bolts (12) attaching PCA cover to PCA.
(5) Mark position and remove leads (4) attached to top of Big Blue capacitor. Replace the two Phillips screws into the filter assembly (Fig. 15).

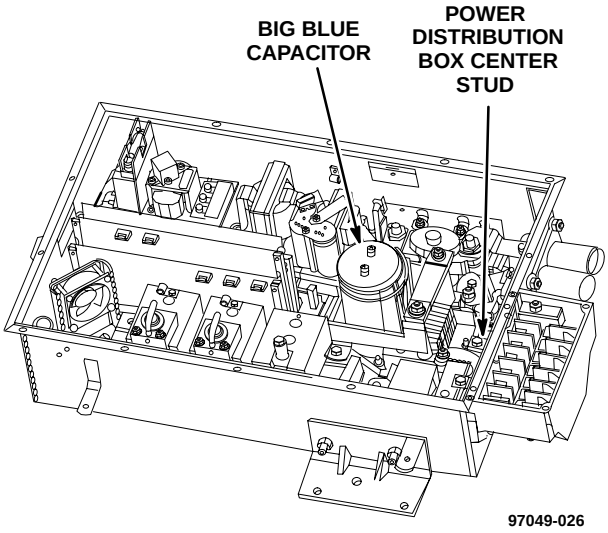

Fig. 15 Big Blue Capacitor

(6) Disconnect wire on Power Distribution Box center stud from PCA C1 assembly and move out of the way.
(7) Remove bus bar from Insulated Gate Bipolar Transistor (IGBT) bus bar to filter assembly (Fig. 16).

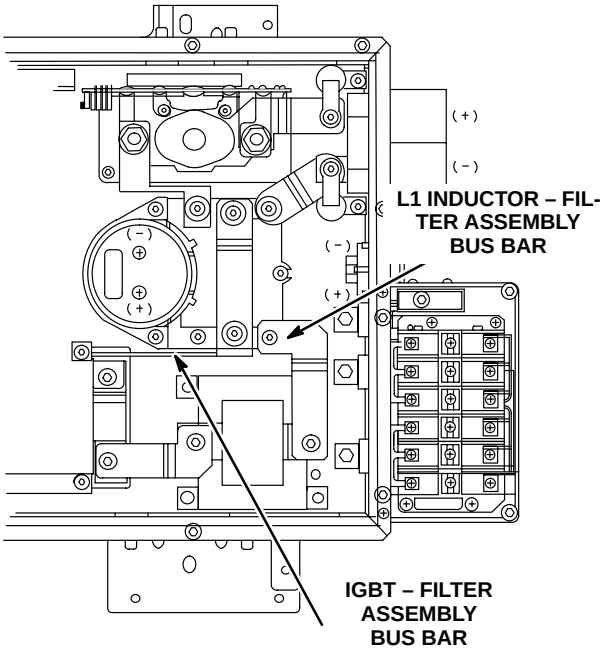

Fig. 16 Bus Bars

FILTER ASSEMBLY (Continued)

(8) Remove bolt and washer on L1 inductor assembly bus bar connecting filter assembly to L1 Inductor assembly.

(9) Loosen nut on filter assembly connecting bus bar to Relay Driver assembly (Fig. 17).

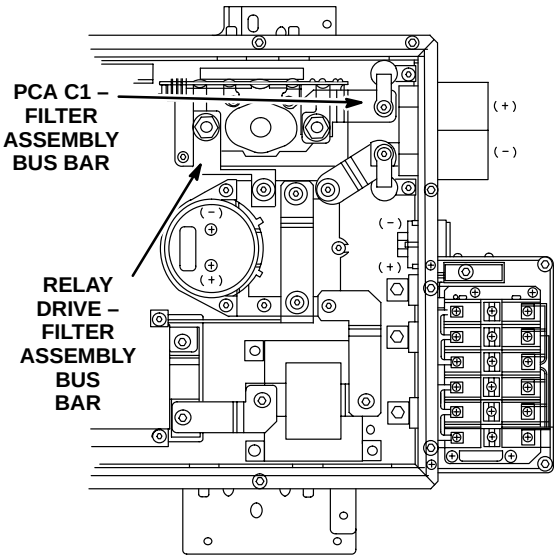

Fig. 17 Bus Bars

(10) Remove nut and washers on relay driver assembly connecting bus bar to filter assembly.

(11) Remove nut and washer on filter assembly attaching bus bar to PCA C1 terminal stud.

(12) Loosen nut on PCA C1 terminal. Lift bus bar off of filter assembly.

(13) Remove nuts (3) attaching filter assembly to PCA base plate.

(14) Remove filter assembly.

INSTALLATION

(1) Install filter assembly.

(2) Install bolt and washer connecting filter bus bar to L1 Inductor assembly. Torque to 5 N•m (48 in. lbs.).

(3) Install nuts (3) attaching filter assembly to PCA base plate. Torque to 2 N•m (18 in. lbs.).

(4) Install bus bar to filter assembly from PCA C3 terminal stud. Torque to 4 N•m (35 in. lbs.).

(5) Install nut and washers on Relay Driver assembly connecting bus bar to filter assembly. Torque to 4 N•m (35 in. lbs.).

(6) Tighten nut on filter assembly connecting bus bar to Relay Driver assembly.

(7) Install bus bar from Insulated Gate Bipolar Transistor (IGBT) bus bar to filter assembly. Torque to 5 N•m (44 in. lbs.).

(8) Connect wire on Power Distribution Box stud from PCA C3 terminal. Torque to 5 N•m (44 in. lbs.).

(9) Attach leads (4) to top of Big Blue capacitor.

(10) Install PCA cover.

(11) Install bolts (12) attaching PCA cover to PCA. Torque to 2 N•m (18 in. lbs.).

(12) Install cover to Power Distribution Box on the PCA.

(13) Connect the auxiliary battery negative cable.

(14) Enable the traction battery pack by turning the high voltage service disconnect switch to On.

GATE DRIVE CIRCUIT BOARD

DESCRIPTION

The gate drive circuit board controls the three IGBT's and regulates power to the traction motor.

REMOVAL

(1) Disable the traction battery pack by turning the high voltage service disconnect switch to Off.

(2) Disconnect and isolate the auxiliary battery negative cable.

(3) Remove cover to Power Distribution Box on the Powertrain Controller Assembly (PCA).

(4) Remove bolts (12) attaching PCA cover to PCA.

(5) Disconnect the current sensor connectors (2) on the Chassis Vector Controller (CVC) circuit board (Fig. 18).

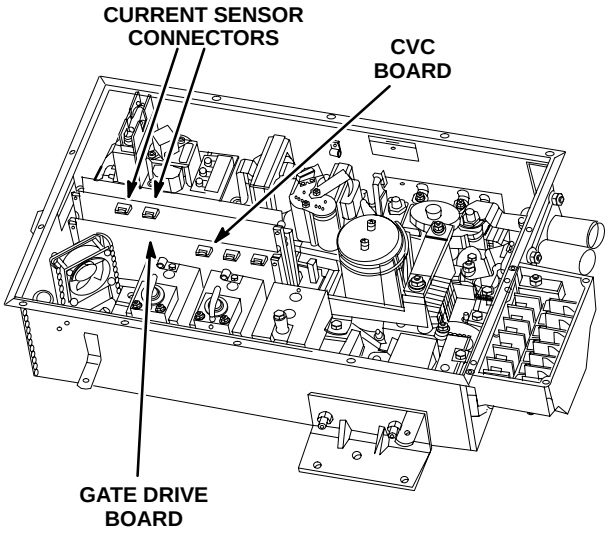

Fig. 18 Gate Drive Circuit Board

GATE DRIVE CIRCUIT BOARD (Continued)

(6) Disconnect the connectors (3) from the gate drive circuit board to the three Insulated Gate Bipolar Transistors (IGBT's) (Fig. 19).

(7) Release both ends of the gate drive circuit board from its support rails by pressing the round retainer buttons toward the circuit board.

(8) Slide the gate drive circuit board up the support rails to remove.

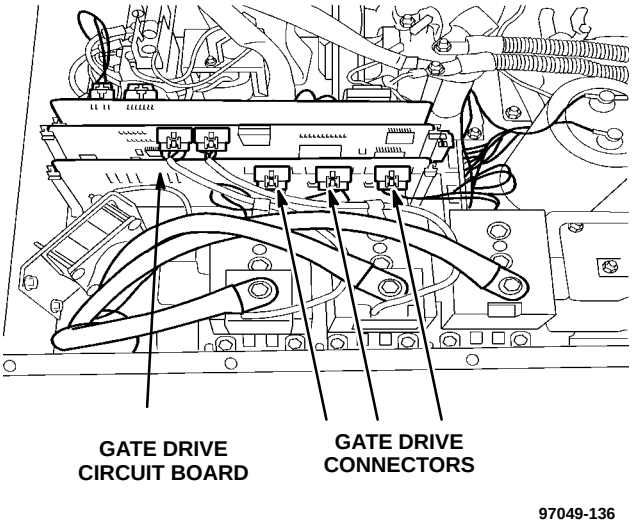

Fig. 19 Gate Drive Circuit Board

INSTALLATION

(1) Install the gate drive circuit board by sliding the circuit board down the support rails.

(2) Connect the fast–on connector from the gate drive circuit board to the three IGBTs.

(3) Connect the current sensor connectors (2) on the CVC circuit board.

(4) Install PCA cover.

(5) Install bolts (12) attaching PCA cover to PCA. Torque to 2 N•m (18 in. lbs.).

(6) Install cover to Power Distribution Box on the PCA.

(7) Connect the auxiliary battery negative cable.

(8) Enable the traction battery pack by turning the high voltage service disconnect switch to On.

HIGH VOLTAGE EMI LINE FILTERS

DESCRIPTION

The EMI line filters stop EMI noise from exiting the PCA.

REMOVAL

(1) Disable the traction battery pack by turning the high voltage service disconnect switch to Off.

(2) Disconnect and isolate the auxiliary battery negative cable.

(3) Remove cover to Power Distribution Box on the Powertrain Controller Assembly (PCA).

(4) Remove bolts (12) attaching PCA cover to PCA.

(5) Remove PCA C1 terminal mounting nut retaining the EMI filter.

(6) Remove the nut mounting the filter to the PCA base plate.

(7) Remove EMI filter (Fig. 20).

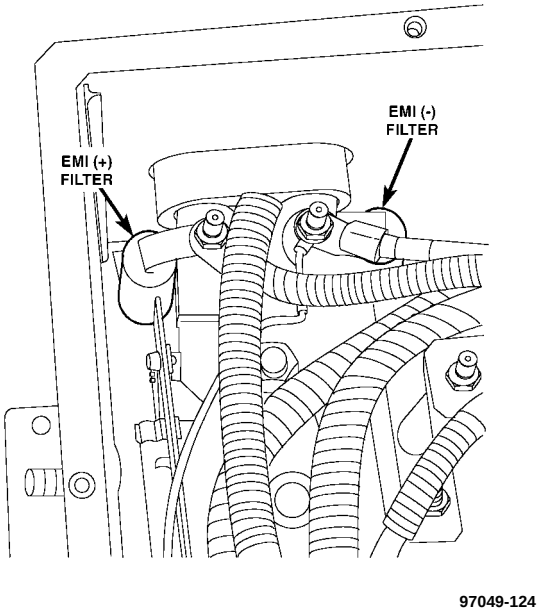

Fig. 20 EMI Filter

INSTALLATION

(1) Install the EMI filter to the PCA base plate. Torque to 2 N•m (18 in. lbs.).

(2) Install PCA C1 terminal mounting nut retaining the EMI filter. Torque to 4 N•m (35 in. lbs.).

(3) Install PCA cover.

(4) Install bolts (12) attaching PCA cover to PCA.

HIGH VOLTAGE EMI LINE FILTERS (Continued)

(5) Install cover to Power Distribution Box on the PCA.
(6) Connect the auxiliary battery negative cable.
(7) Enable the traction battery pack by turning the high voltage service disconnect switch to On.

HIGH VOLTAGE FUSES

REMOVAL

(1) Disable the traction battery pack by turning the high voltage service disconnect switch to Off.
(2) Disconnect and isolate the auxiliary battery negative cable.
(3) Disconnect the Powertrain Controller Assembly (PCA) C1 high voltage connector.
(4) Remove cover to Power Distribution Box (PDB) on the PCA (fig. 21).

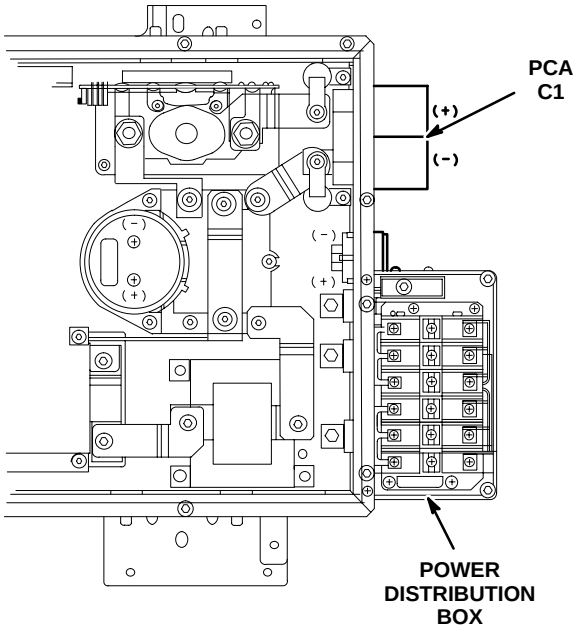

Fig. 21 Power Distribution Box

WARNING: VERIFY THAT HIGH VOLTAGE IS NOT PRESENT ACROSS THE HIGH VOLTAGE FUSES BEFORE SERVICING THE FUSES.

(5) Using a voltmeter, measure the voltage across the high voltage fuses in the PDB, ensuring that high voltage is not present.
(6) Remove faulty high voltage fuse.

INSTALLATION

(1) Replace high voltage fuse.
(2) Install cover to Power Distribution Box on the PCA.
(3) Connect PCA C1 high voltage connector.
(4) Connect the auxiliary battery negative cable.
(5) Enable the traction battery pack by turning the high voltage service disconnect switch to On.

INSULATED GATE BIPOLAR TRANSISTOR (IGBT)

DESCRIPTION

There are three IGBT's in the PCA. The IGBT's are used to regulate power to the traction motor and are controlled by the gate drive board.

REMOVAL

NOTE: If one IGBT fails, all three of the IGBT's must be replaced.

(1) Disconnect the traction battery pack by turning the high voltage service disconnect switch to Off.
(2) Disconnect and isolate the auxiliary battery negative cable.
(3) Remove cover to Power Distribution Box on the Powertrain Controller Assembly (PCA).
(4) Remove bolts (12) attaching PCA cover to PCA.
(5) Mark position and disconnect phase wires (3) (Fig. 22).

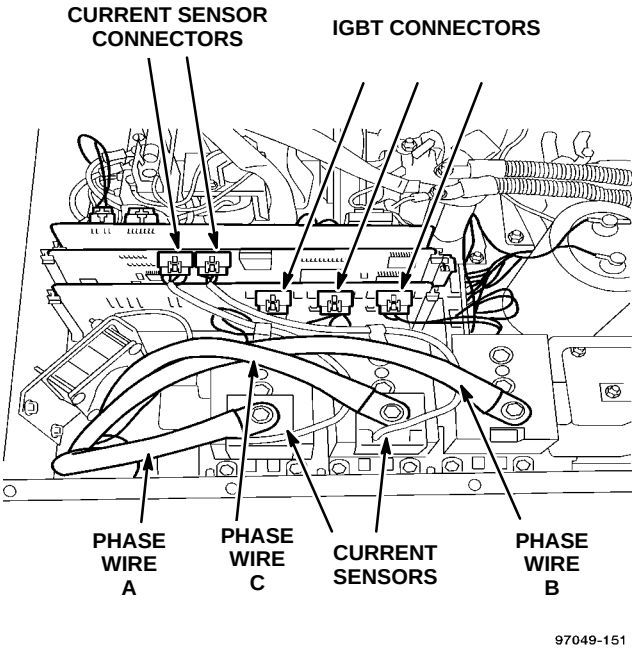

Fig. 22 Phase Wires

(6) Disconnect current sensor connectors at the Chassis Vector controller (CVC) circuit board.

INSULATED GATE BIPOLAR TRANSISTOR (Continued)

(7) Remove current sensors (2).
(8) Remove allen bolts (2) from each of the Insulated Gate Bipolar Transistor (IGBT) snubber capacitors.
(9) Remove IGBT snubber capacitors.
(10) Remove bus bars from filter assembly to IGBT bus bar.
(11) Remove bus bar from L1 inductor assembly to IGBT bus bar.
(12) Disconnect IGBT connectors (3) at the gate drive circuit board.
(13) Carefully remove the two IGBT bus bars and place on a padded surface.
(14) Remove IGBT retaining nuts. When removing IGBT (B) carefully remove the IGBT cold plate thermistor and note location (Fig. 23).

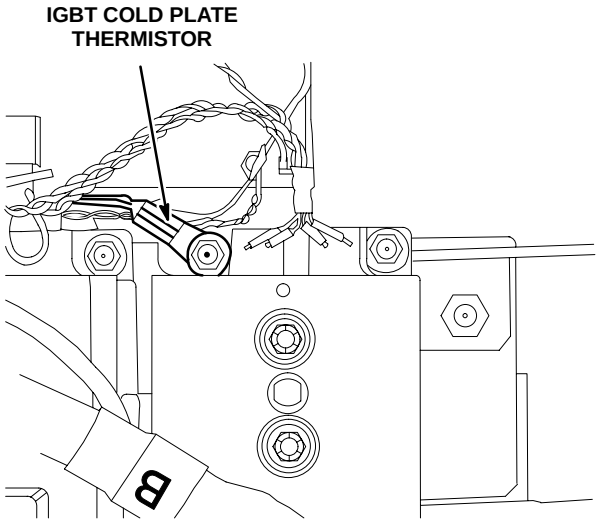

Fig. 23 IGBT Cold Plate Thermistor

(15) Remove the IGBT's (Fig. 24).
(16) Remove and discard old thermal pads.

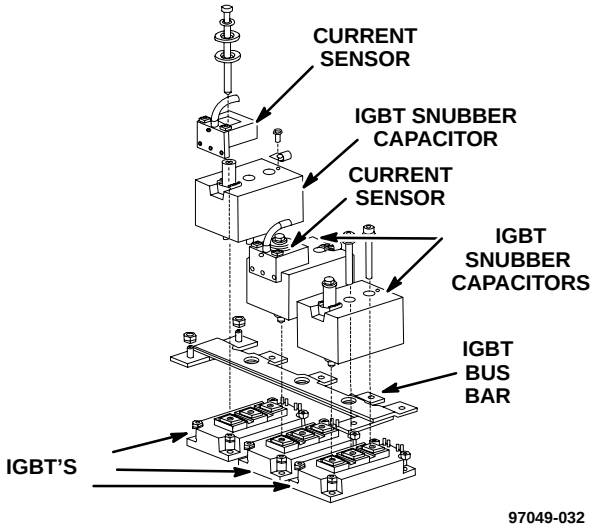

Fig. 24 IGBT(s)

NOTE: Always replace thermal pads when removing IGBT(s).

INSTALLATION

(1) Install new thermal pads (remove paper backing from both sides before installation).
(2) Install IGBT(s) on the IGBT cold plate. When installing IGBT (B), install IGBT cold plate thermistor.
(3) Install mounting nuts to the IGBT(s). Torque to 2 N•m (18 in. lbs.).
(4) Carefully install IGBT bus bars.
(5) Install bus bar from filter assembly to IGBT bus bars.
(6) Install bus bar from L1 inductor assembly to IGBT bus bars.
(7) Connect IGBT connectors to the gate drive circuit board.
(8) Install IGBT snubber capacitors.
(9) Install allen bolts (2) for each of the IGBT snubber capacitors. Torque to 8 N•m (71 in. lbs.).
(10) Install current sensors.

INSULATED GATE BIPOLAR TRANSISTOR (Continued)

(11) Connect current sensor connectors at the CVC circuit board.

(12) Connect phase wires (3). Note orientation of phase wires in figure 25. Torque to 8 N•m (71 in. lbs.).

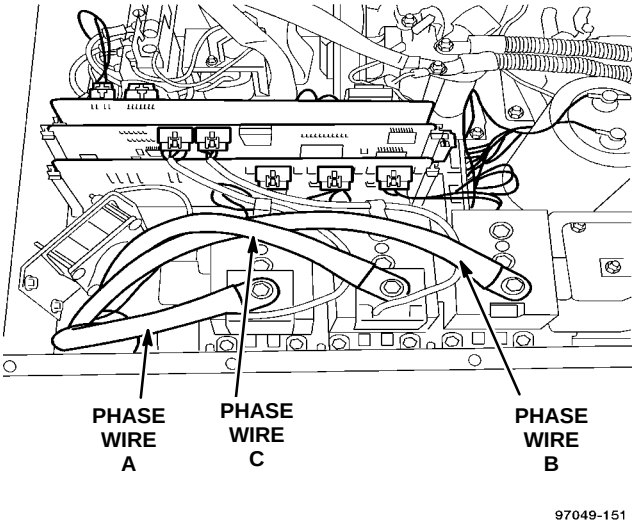

Fig. 25 Phase Wires

(13) Install PCA cover.

(14) Install bolts (12) attaching PCA cover to PCA. Torque to 2 N•m (18 in. lbs.).

(15) Install cover to Power Distribution Box on the PCA.

(16) Connect the auxiliary battery negative cable.

(17) Enable the traction battery pack by turning the high voltage service disconnect switch to On.

INSULATED GATE BIPOLAR TRANSISTOR (IGBT) COLD PLATE

DESCRIPTION

The IGBT cold plate is mounted inside the PCA on the bottom under the IGBT's. Its purpose is to cool the IGBT's by circulating coolant through it.

REMOVAL

(1) Disable the traction battery pack by turning the high voltage service disconnect switch to Off.

(2) Disconnect and isolate the auxiliary battery negative cable.

(3) Remove PCA. Refer to "PCA Removal and Installation" procedure in this group.

(4) Remove coolant fitting in the bottom of the IGBT cold plate and crossover hose from the APC cold plate (Fig. 26).

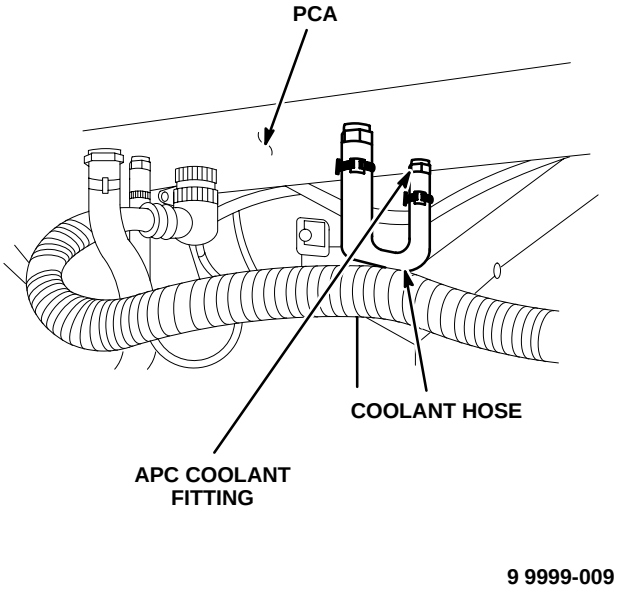

Fig. 26 IGBT Cold Plate Coolant Line

(5) Remove IGBT's. Refer to "Insulated Gate Bipolar Transistor" removal procedure in this group.

(6) Remove IGBT cold plate.

(7) Clean the mating surfaces of the replacement cold plate and install new thermal pads to the IGBT mating interfaces.

INSTALLATION

NOTE: Always replace thermal pads when installing IGBT Cold Plate.

(1) Install new thermal pads (remove paper backing from both sides before installation).

(2) Install IGBT cold plate.

(3) Install IGBT's. Refer to "Insulated Gate Bipolar Transistor" installation procedure in this group.

IGBT COLD PLATE (Continued)

NOTE: Apply sealant (Fel–Pro or equivalent) to threads before installing coolant fittings.

(4) Install coolant fitting in the bottom of the IGBT cold plate and reattach crossover hose from the APC cold plate.
(5) Install the PCA. Refer to “PCA Removal and Installation” Procedure in this group.
(6) Connect the auxiliary battery negative cable.
(7) Enable the traction battery pack by turning the high voltage service disconnect switch to On.
(8) Check and fill battery pack coolant to proper level. Refer to battery pack coolant fill procedure.

INSULATED GATE BIPOLAR TRANSISTOR (IGBT) SNUBBER CAPACITORS

DESCRIPTION

The IGBT snubber capacitors are located on top of the IGBT’s. Their purpose is to filter switching transients from IGBT’s.

REMOVAL

(1) Disable the traction battery pack by turning the high voltage service disconnect switch to Off.
(2) Disconnect and isolate the auxiliary battery negative cable.
(3) Remove cover to Power Distribution Box on the Powertrain Controller Assembly (PCA).
(4) Remove bolts (12) attaching PCA cover to PCA.

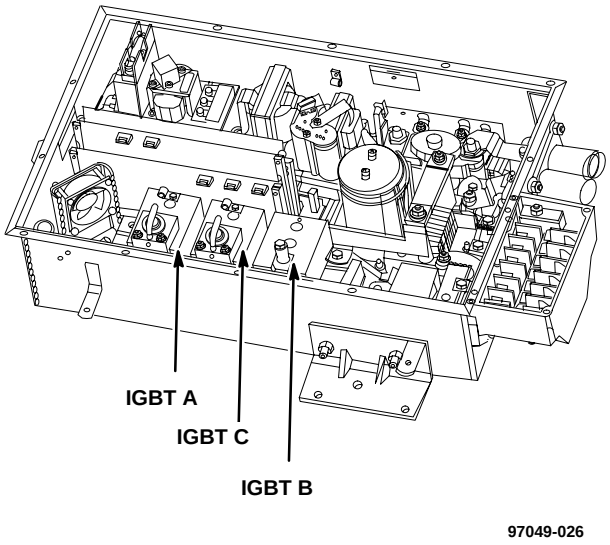

Fig. 27 Insulated Gate Bipolar Transistors

(5) If affected snubber capacitor is on IGBT “A” or “C,” disconnect Current Sensor connectors at the Chassis Vector Controller (CVC) circuit board (Fig. 27).
(6) Disconnect phase wires (3) and mark position (Fig. 28).

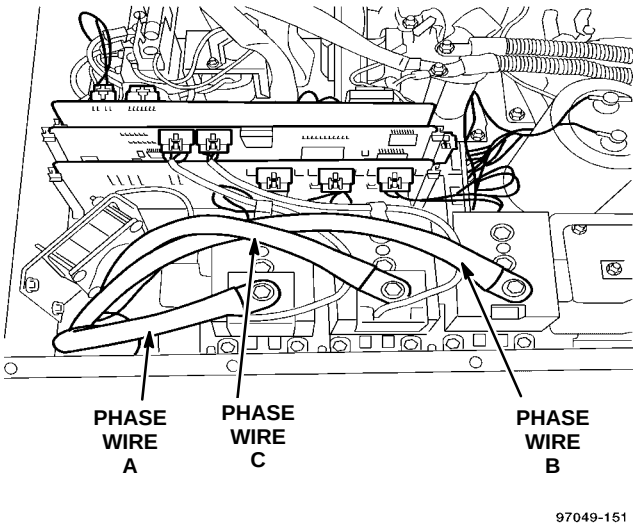

Fig. 28 Phase Wires

(7) If affected snubber capacitor is on IGBT “A” or “C,” remove Current Sensor(s).
(8) Remove allen bolts (2) from the IGBT snubber capacitor.
(9) Remove IGBT snubber capacitor (Fig. 29).

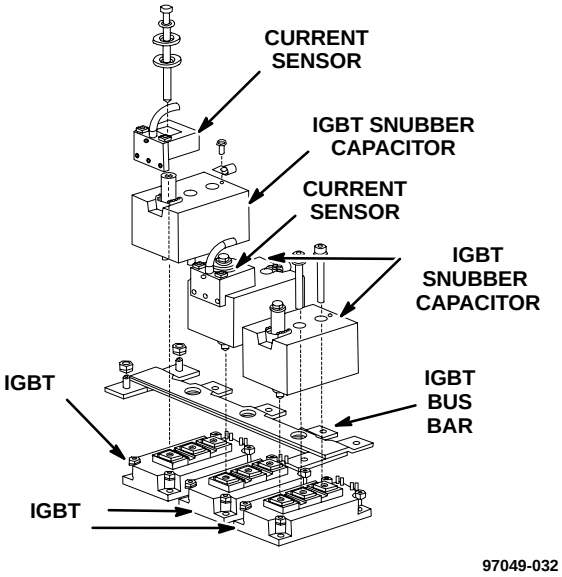

Fig. 29 IGBT Assemblies

IGBT SNUBBER CAPACITORS (Continued)

INSTALLATION

(1) Install IGBT snubber capacitors.
(2) Install allen bolts (2) for each of the IGBT snubber capacitors. Torque to 8 N•m (71 in. lbs.).
(3) If affected snubber capacitor is on IGBT “A” or “C,” install Current Sensor(s).
(4) If affected snubber capacitor is on IGBT “A” or “C,” connect Current Sensor connectors at the CVC circuit board.
(5) Connect phase wires (3).
(6) Install PCA cover.
(7) Install bolts (12) attaching PCA cover to PCA. Torque to 2 N•m (18 in. lbs.).
(8) Install cover to Power Distribution Box on the PCA.
(9) Connect the auxiliary battery negative cable.
(10) Enable the traction battery pack by turning the high voltage service disconnect switch to On.

L1 INDUCTOR

DESCRIPTION

The L1 inductor is used in conjunction with the filter assembly to filter switching noise from the IGBT’s.

REMOVAL

(1) Disable the traction battery pack by turning the high voltage service disconnect switch to Off.
(2) Disconnect and isolate the auxiliary battery negative cable.
(3) Remove cover to Power Distribution Box on the Powertrain Controller Assembly (PCA).
(4) Remove bolts (12) attaching PCA cover to PCA.
(5) Remove bus bar from filter assembly to L1 inductor assembly (Fig. 30).

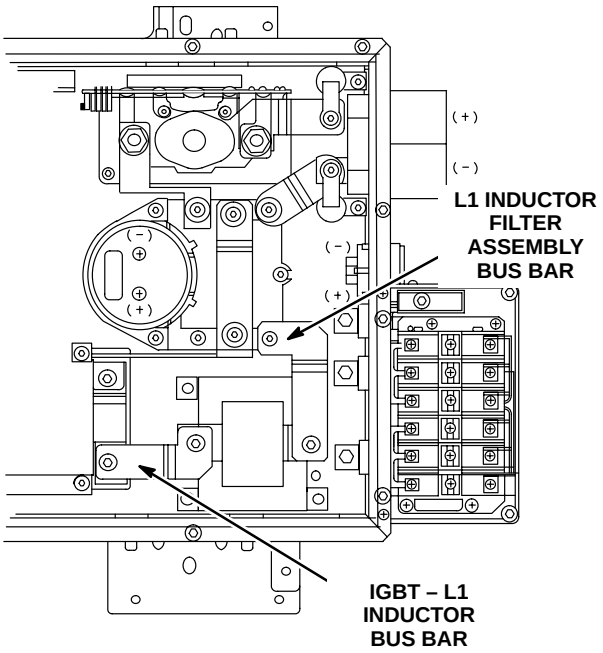

Fig. 30 Bus Bars

(6) Remove bus bar from L1 inductor assembly to IGBT bus bars.
(7) Remove nuts and washers (4) mounting the L1 inductor assembly to the PCA base plate.
(8) Remove L1 inductor assembly (Fig. 31).

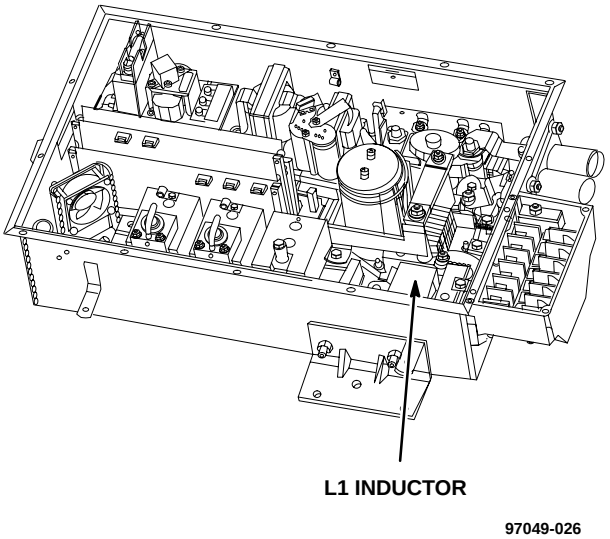

Fig. 31 L1 Inductor

L1 INDUCTOR (Continued)

INSTALLATION

(1) Install L1 inductor assembly to the PCA base plate. Torque to 2 N•m (18 in. lbs.).
(2) Install bus bar from filter assembly to L1 inductor assembly.
(3) Install bus bar from L1 inductor assembly to IGBT bus bars.
(4) Install PCA cover.
(5) Install bolts (12) attaching PCA cover to PCA. Torque to 2 N•m (18 in. lbs.).
(6) Install cover to Power Distribution Box on the PCA.
(7) Connect the auxiliary battery negative cable.
(8) Enable the traction battery pack by turning the high voltage service disconnect switch to On.

LOW VOLTAGE POWER SUPPLY/AUXILIARY POWER CONVERTER (LVPS/APC) CIRCUIT BOARD

DESCRIPTION

The LVPS/APC circuit board controls the APC and provides:

- +/– 15 volts.
- +12 volts.
- +5 volt feed to the PCA.

REMOVAL

(1) Disable the traction battery pack by turning the high voltage service disconnect switch to Off.
(2) Disconnect and isolate the auxiliary battery negative cable.
(3) Remove cover to Power Distribution Box on the Powertrain Controller Assembly (PCA).
(4) Remove bolts (12) attaching PCA cover to PCA.
(5) Disconnect the APC power drive connectors (2) at the LVPS/APC circuit board (Fig. 32).

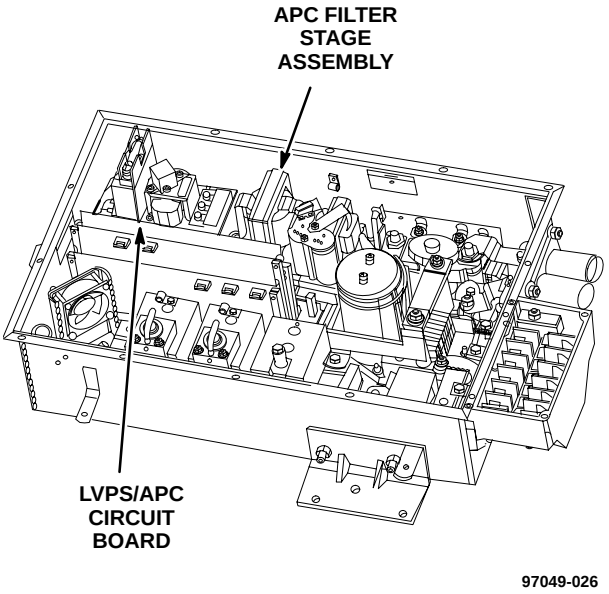

Fig. 32 LVPS/APC Circuit Board

(6) Loosen nuts (4) attaching APC filter stage assembly to the PCA.
(7) Remove the bolt retaining the thermal tie from the LVPS/APC circuit board to the APC cold plate (Fig. 33).

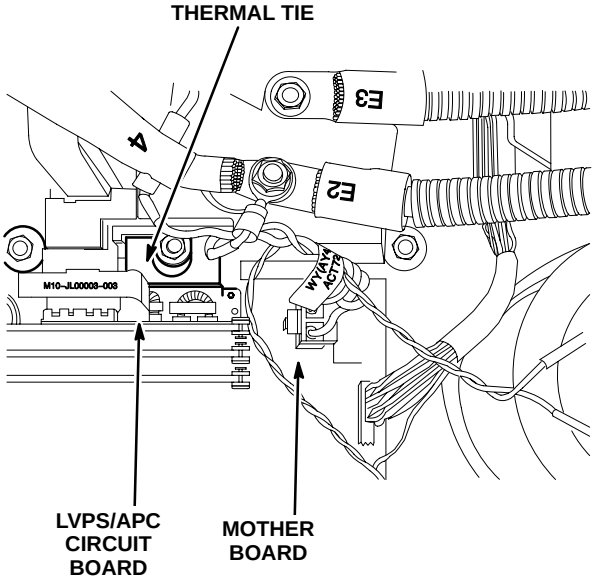

Fig. 33 Thermal Tie

(8) Release both ends of the LVPS/APC circuit board from its support rails by pressing the round retainer buttons toward the circuit board. Slide the LVPS/APC circuit board up the support rails to remove.

LVPS/APC CIRCUIT BOARD (Continued)

INSTALLATION

(1) Install the LVPS/APC circuit board by sliding the circuit board down the support rails until fully seated, then locking retainers.

(2) Install the bolt retaining the thermal tie from the LVPS/APC circuit board to the APC cold plate. Torque to 2 N•m (18 in. lbs.).

(3) Torque APC filter stage assembly nuts (4) to 2 N•m (18 in. lbs.).

(4) Connect the APC power drive to LVPS/APC connector.

(5) Install PCA cover.

(6) Install bolts (12) attaching PCA cover to PCA. Torque to 2 N•m (18 in. lbs.).

(7) Install cover to Power Distribution Box on the PCA.

(8) Connect the auxiliary battery negative cable.

(9) Enable the traction battery pack by turning the high voltage service disconnect switch to On.

POWER DISTRIBUTION BOX (PDB)

DESCRIPTION

The PDB provides power and fusing for the high voltage auxiliary loads such as A/C, PTC heater, power steering, battery coolant pump, and the oil pump. The PDB cover is interlocked with the PCA cover to prevent the PCA cover from being removed without first removing PDB cover. A pilot line opens upon removal of the PDB cover and discharges the high voltage bus within the PCA. The vehicle will not operate with cover removed.

REMOVAL

(1) Disable the traction battery pack by turning the high voltage service disconnect switch to Off.

(2) Disconnect and isolate auxiliary battery negative cable.

(3) Remove cover to Power Distribution Box on the Powertrain Controller Assembly (PCA) (Fig. 34).

(4) Remove bolts (12) attaching PCA cover to PCA.

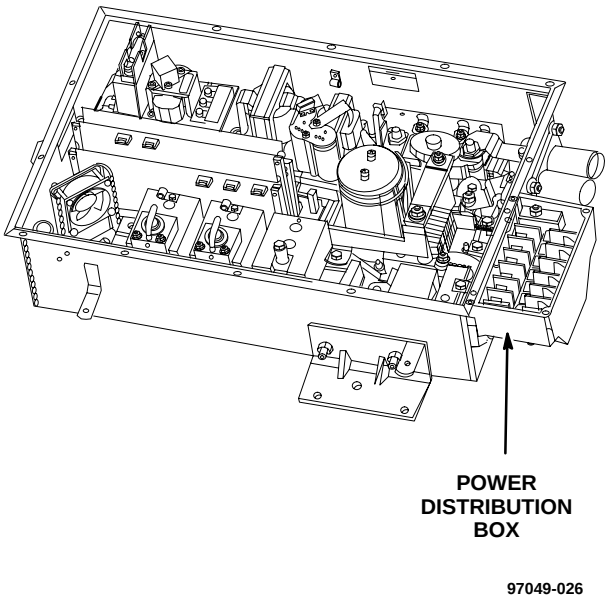

Fig. 34 Power Distribution Box

(5) Disconnect PCA connector (under PDB) by sliding outer ring down to release. Pull harness straight down.

(6) Disconnect high voltage leads (3) from PDB (Fig. 35).

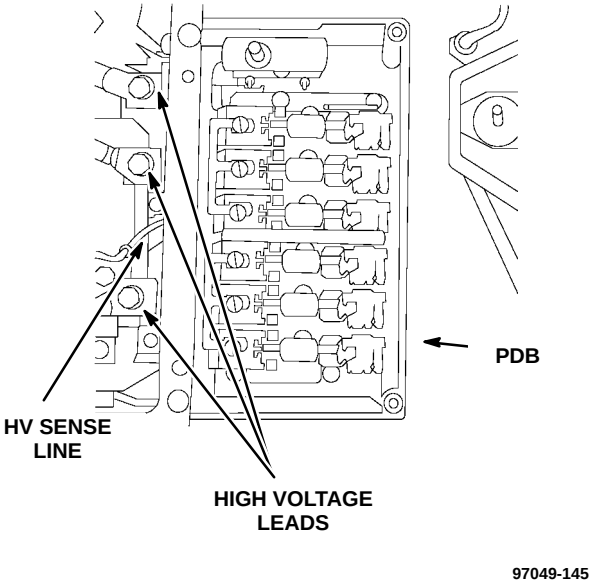

Fig. 35 High Voltage Leads

POWER DISTRIBUTION BOX (Continued)

(7) Disconnect high voltage sense line from relay driver circuit board J3 connector (Fig. 36).

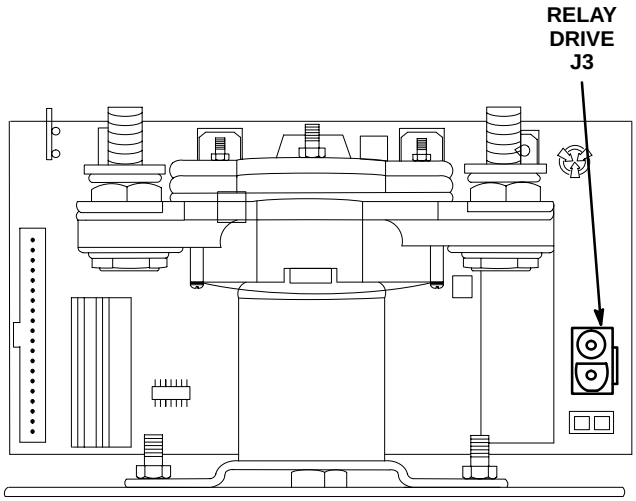

Fig. 36 Relay Drive Board

(8) Remove lower mounting nuts (2) under PDB.

(9) Remove upper mounting screws from PDB.

(10) Remove PDB carefully feeding sense line connector through hole in side of PCA (Fig. 37).

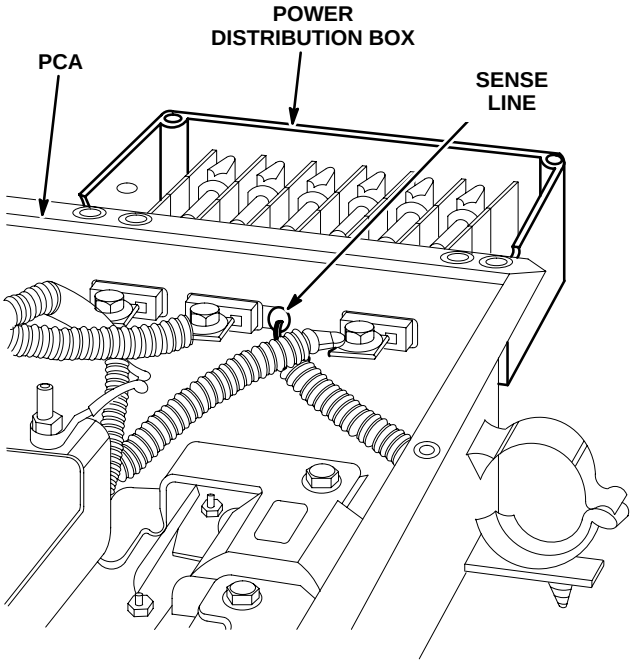

Fig. 37 Power Distribution Box

INSTALLATION

(1) Feed PDB sense line through hole in side of PCA.

(2) Install PDB. Torque upper mounting screws to 2 N•m (18 in. lbs.).

(3) Torque lower mounting nuts to 2 N•m (18 in. lbs.).

(4) Connect high voltage sense line connector at relay driver circuit board.

(5) Connect high voltage leads (3). Torque bolts to 4 N•m (35 in. lbs.).

(6) Connect PCA C1 connector (under PDB).

(7) Install PCA cover.

(8) Install bolts (12) attaching PCA cover to PCA. Torque to 2 N•m (18 in. lbs.).

(9) Install cover to Power Distribution Box on the PCA.

(10) Connect auxiliary battery negative cable.

(11) Enable the traction battery pack by turning the high voltage service disconnect switch to On.

POWERTRAIN CONTROLLER ASSEMBLY (PCA)

DESCRIPTION

The PCA monitors and controls the traction motor, auxiliary battery charging, regenerative braking and many other functions of the EPIC, including receiving input information from the operator and various sensors and controllers. The PCA consists of the following components:

REMOVAL

(1) Disable the traction battery pack by turning the high voltage service disconnect switch to Off.

(2) Disconnect and isolate the auxiliary battery negative cable.

(3) Remove cover to Power Distribution Box on the Powertrain Controller Assembly (PCA).

(4) Remove bolts (12) attaching PCA cover to PCA.

POWERTRAIN CONTROLLER ASSEMBLY (Continued)

(5) Mark position and disconnect phase wires (3) (Fig. 38).

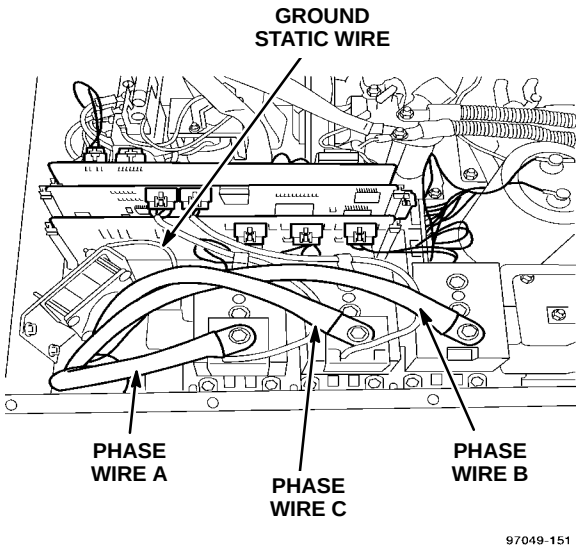

Fig. 38 Phase Wires

(6) Remove PCA ground static wire from PCA cooling fan.

(7) Remove PCA C1 high voltage connector (Fig. 39).

(8) Remove PCA C5 low voltage connector.

(9) Remove PCA C4 high voltage connector under power distribution box.

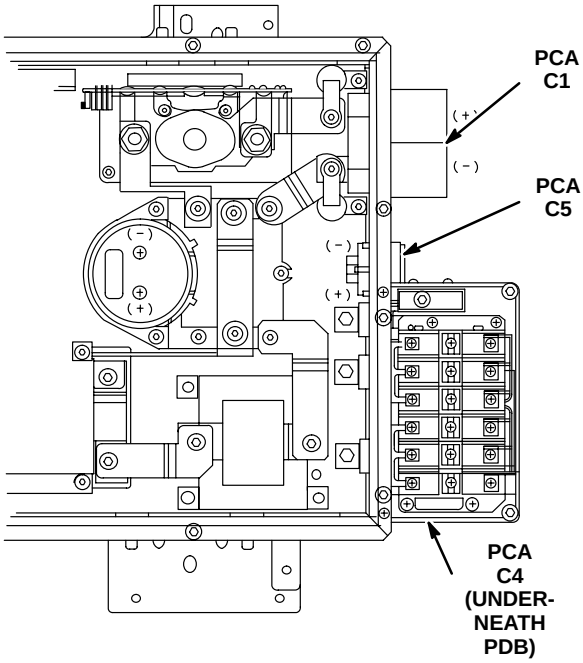

Fig. 39 PCA Connectors

(10) Remove harnesses from trim clips around PCA.

(11) Disconnect coolant line on PCA right side.

(12) Remove PCA attaching bolts (4) (Fig. 40).

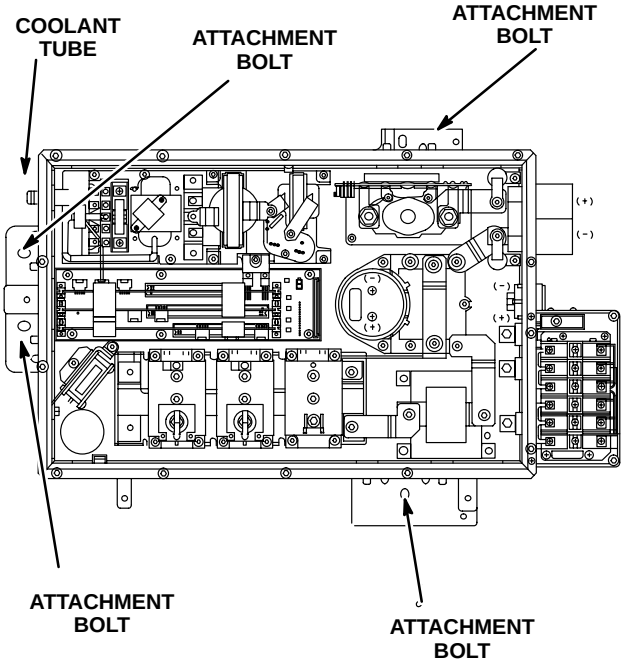

Fig. 40 PCA Attachment Bolts

(13) Raise PCA to remove coolant line and connectors (2) under PCA (Fig. 41).

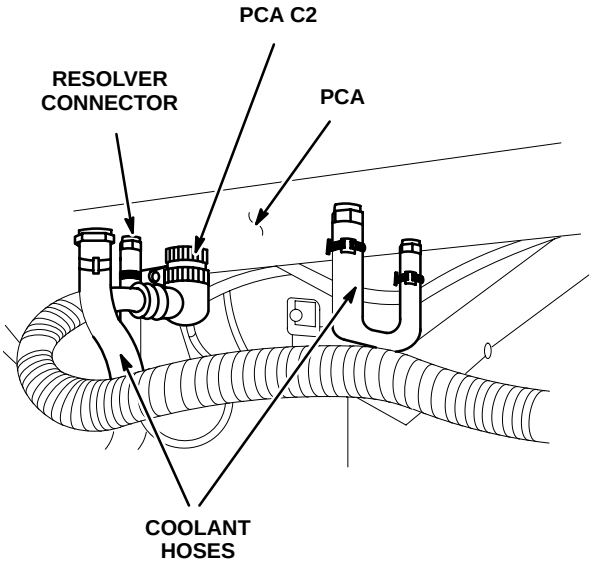

Fig. 41 PCA Coolant Lines and Connectors

(14) Remove PCA.

POWERTRAIN CONTROLLER ASSEMBLY (Continued)

INSTALLATION

(1) Install PCA.
(2) Install coolant line and connectors (2) underneath PCA.
(3) Connect oil line on PCA right side.
(4) Install PCA C4 connector under power distribution box.
(5) Install PCA C5 low voltage connector.
(6) Install PCA C1 high voltage connector.
(7) Install PCA attaching bolts (4). Tighten to 31 N•m (23 ft. lbs.) torque.
(8) Install PCA ground static wire to PCA cooling fan.
(9) Connect phase wires (3). Torque to 8 N•m (71 in. lbs.).
(10) Install PCA cover.
(11) Install bolts (12) attaching PCA cover to PCA. Tighten to 2 N•m (18 in. lbs.) torque.
(12) Install cover to Power Distribution Box on PCA.
(13) Connect the auxiliary battery negative cable.
(14) Enable the traction battery pack by turning the high voltage service disconnect switch to On.

POWERTRAIN CONTROLLER ASSEMBLY (PCA) COOLING FAN

DESCRIPTION

The PCA cooling fan helps keep temperatures down inside the PCA. Without the cooling fan, circuit boards and other components in the PCA may overheat and fail.

REMOVAL

(1) Disable the traction battery pack by turning the high voltage service disconnect switch to Off.
(2) Disconnect and isolate the auxiliary battery negative cable.
(3) Remove cover to Power Distribution Box on the Powertrain Controller Assembly (PCA).
(4) Remove bolts (12) attaching PCA cover to PCA.
(5) Remove nuts and washers mounting the fan bracket to the PCA base plate.
(6) Disconnect fan connector from the mother board connector.
(7) Disconnect ground static wire (Fig. 42).

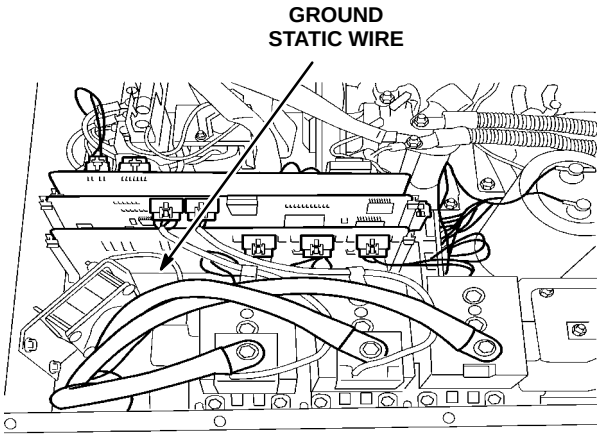

Fig. 42 Ground Static Wire

(8) Remove PCA cooling fan (Fig. 43).

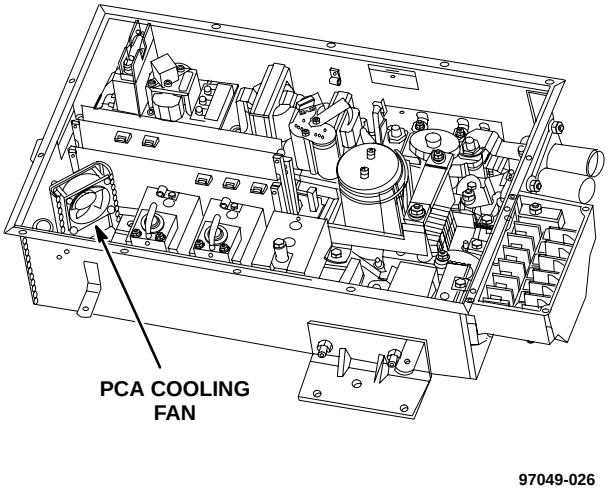

Fig. 43 PCA Cooling Fan

INSTALLATION

(1) Install PCA fan.
(2) Connect ground static wire.
(3) Connect fan connector to the mother board connector.
(4) Install washers and nuts mounting the fan bracket to the PCA base plate. Torque to 4 N•m (35 in. lbs.).
(5) Install PCA cover.
(6) Install bolts (12) attaching PCA cover to PCA. Torque to 2 N•m (18 in. lbs.).

PCA COOLING FAN (Continued)

(7) Install cover to Power Distribution Box on the PCA.
(8) Connect the auxiliary battery negative cable.
(9) Enable the traction battery pack by turning the high voltage service disconnect switch to On.

POWERTRAIN CONTROLLER ASSEMBLY (PCA) MOTHER BOARD

DESCRIPTION

The PCA mother board is a connection interface board for the low voltage vehicle interface harness (C4), resolver interface (C5), CVC board, LVPS/APC board and gate drive board.

REMOVAL

(1) Disable the traction battery pack by turning the high voltage service disconnect switch to Off.
(2) Disconnect and isolate the auxiliary battery negative cable.
(3) Remove cover to Power Distribution Box on the Powertrain Controller Assembly (PCA).
(4) Remove bolts (12) attaching PCA cover to PCA.
(5) Mark position and disconnect phase wires (3) (Fig. 44).

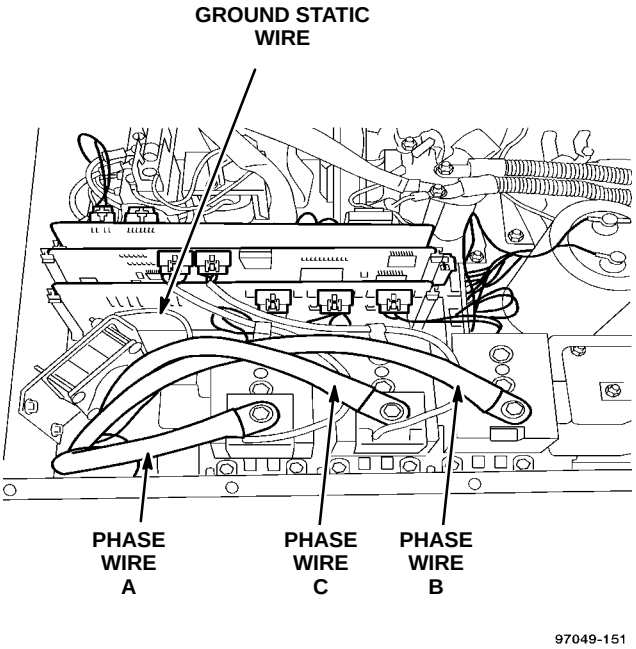

Fig. 44 Phase Wires

(6) Remove PCA ground static wire from PCA cooling fan.

(7) Remove PCA C1 high voltage connector (Fig. 45).

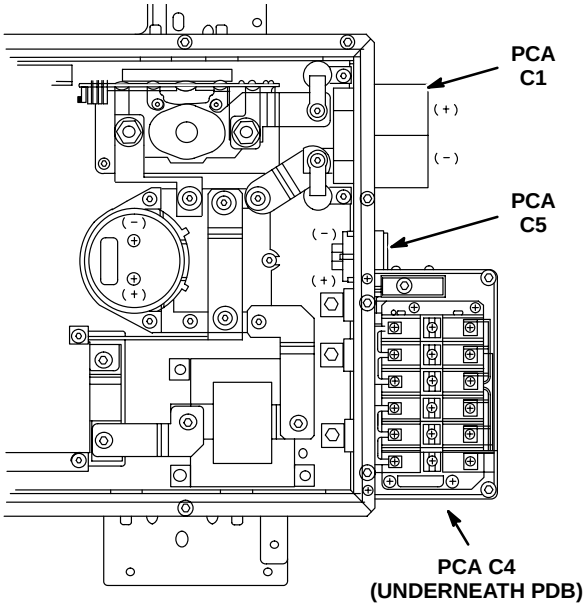

Fig. 45 PCA Connectors

(8) Remove PCA C5 low voltage connector.
(9) Remove PCA C4 high voltage connector under power distribution box.
(10) Remove wiring harnesses from trim clips around the PCA.
(11) Remove PCA attaching bolts (4) (Fig. 46).

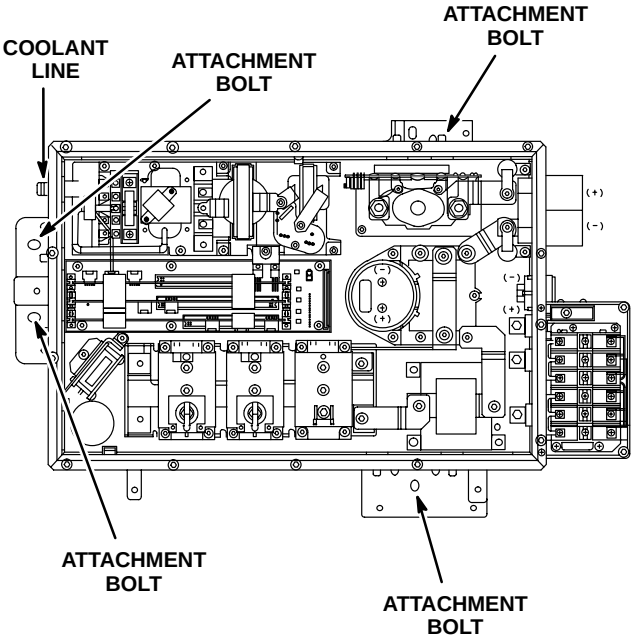

Fig. 46 PCA Attachment Bolts

(12) Disconnect coolant line on PCA right side.

PCA MOTHER BOARD (Continued)

(13) Raise PCA to disconnect resolver and PCA C2 connectors (Fig. 47).

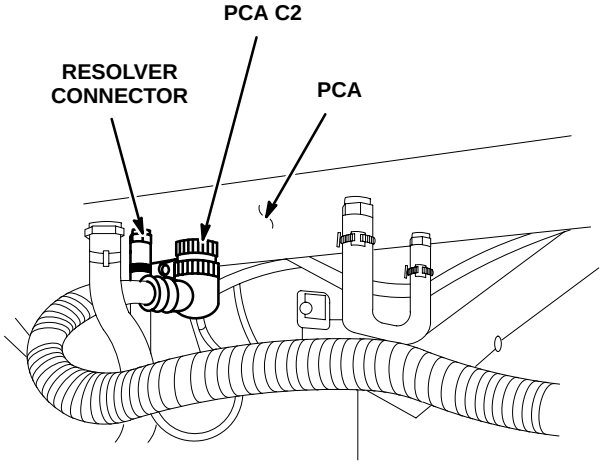

Fig. 47 PCA Connectors

(14) Disconnect mother board J1 and J4 connectors (Fig. 48).

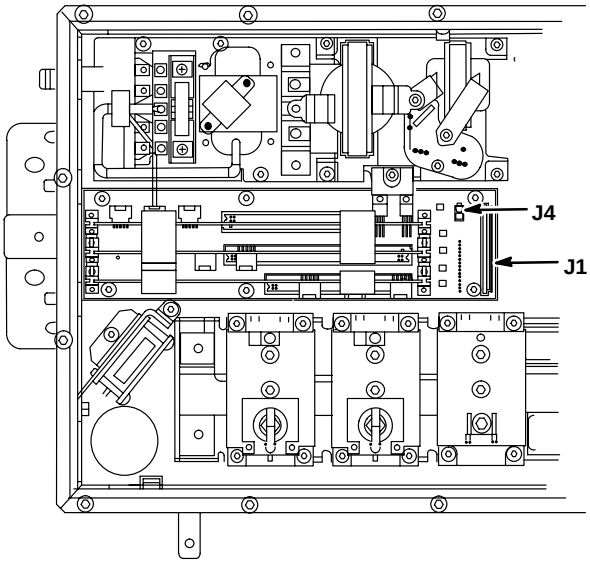

97049-116

Fig. 48 PCA Mother Board

(15) Remove the Low Voltage Power Supply/ Auxiliary Power Controller (LVPS/APC) circuit board. Refer to “LVPS/APC Circuit Board” removal procedures in this group.

(16) Remove the Chassis Vector Controller (CVC) circuit board. Refer to “CVC Circuit Board” removal procedures in this group.

(17) Remove the gate drive circuit board. Refer to “Gate Drive Circuit Board” removal procedures in this group.

(18) Remove nuts (6) mounting mother board to PCA base plate.

(19) Remove mother board.

INSTALLATION

(1) Install mother board. Torque to 2 N•m (18 in. lbs.).

(2) Install coolant line and connectors (2) underneath PCA.

(3) Connect coolant line to PCA.

(4) Install PCA C4 connector under power distribution box.

(5) Install PCA C5 low voltage connector.

(6) Install PCA C1 high voltage connector.

(7) Install PCA attaching bolts (4). Tighten to 31 N•m (23 ft. lbs.) torque.

(8) Install PCA ground static wire to PCA cooling fan.

(9) Connect phase wires (3). Torque to 8 N•m (71 in. lbs.).

(10) Install the Low Voltage Power Supply/Auxiliary Power Controller (LVPS/APC) circuit board. Refer to “LVPS/APC Circuit Board” installation procedures in this group.

(11) Install the Chassis Vector Controller (CVC) circuit board. Refer to “CVC Circuit Board” installation procedures in this group.

(12) Install the gate drive circuit board. Refer to “Gate Drive Circuit Board” installation procedures in this group.

(13) Connect the mother board J1 and J4 connectors.

(14) Install PCA cover.

(15) Install bolts (12) attaching PCA cover to PCA. Torque to 2 N•m (18 in. lbs.).

(16) Install cover to Power Distribution Box on the PCA.

(17) Connect the auxiliary battery negative cable.

(18) Enable the traction battery pack by turning the high voltage service disconnect switch to On.

RELAY DRIVE ASSEMBLY

DESCRIPTION

The Relay Drive Assembly isolates the power bridge from the traction batteries. During start–up, the voltage at the power bridge must be within a specified limit for the main relay to energize. High voltage is discharged to less than 50 volts whenever the main pilot line is opened. If the Relay Driver sees a normal key Off, the system is discharged after four minutes.

REMOVAL

(1) Disable the traction battery pack by turning the high voltage service disconnect switch to Off.

(2) Disconnect and isolate the auxiliary battery negative cable.

(3) Remove cover to Power Distribution Box on the Powertrain Controller Assembly (PCA).

(4) Remove bolts (12) attaching PCA cover to PCA.

(5) Remove (+) and (–) output leads attached to the APC filter stage assembly front studs and bend out of the way (Fig. 49).

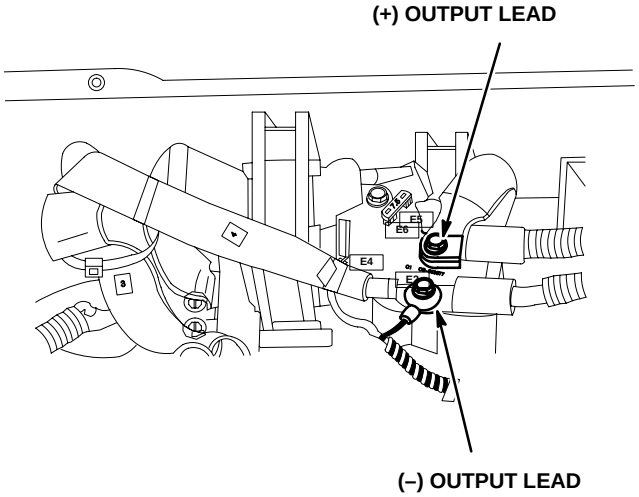

Fig. 49 APC Inductor Leads

(6) Remove wire from slot connector on relay drive board (Fig. 50). Move wire out of the way.

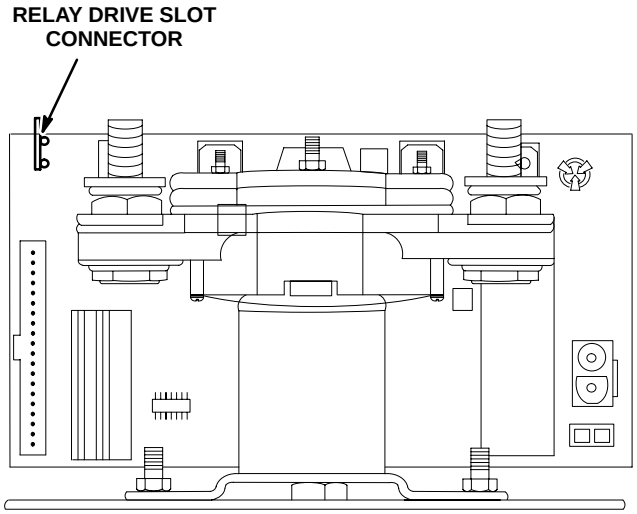

Fig. 50 Relay Drive Assembly

(7) Remove nut and washers on relay driver assembly retaining cable from power distribution box W4E1 (+) cable (Fig. 51). Bend cable out of the way.

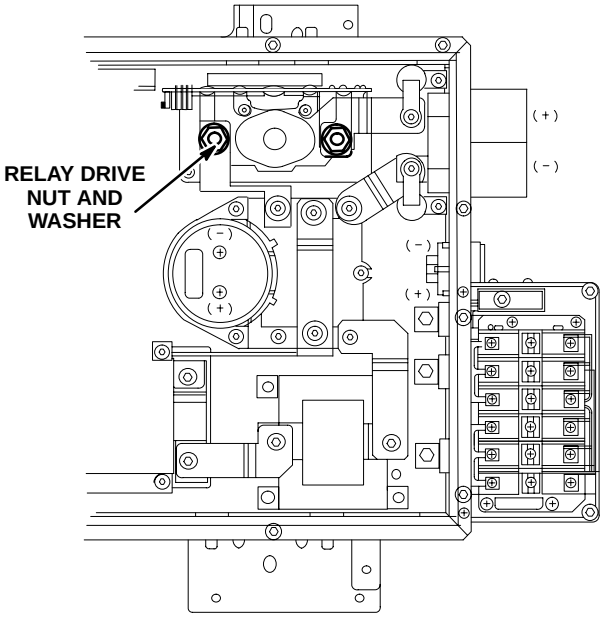

Fig. 51 Relay Drive Assembly

RELAY DRIVE ASSEMBLY (Continued)

(8) Remove nut on EMI (+) filter terminal stud. Bend wires out of the way (Fig. 52).

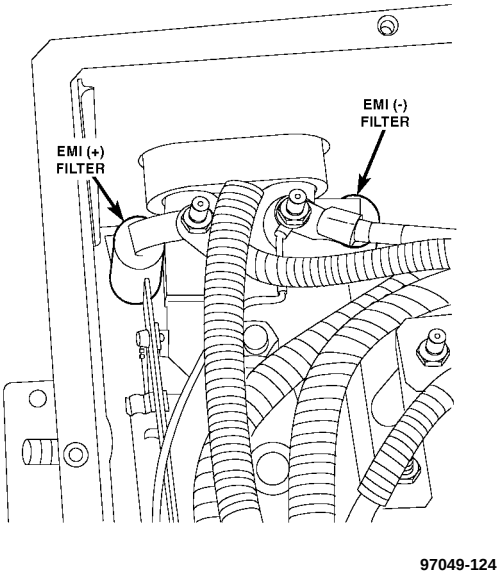

Fig. 52 EMI Filter

(9) Remove nut retaining EMI filter (+) to PCA base plate. Remove EMI (+) filter.

(10) Remove nut on relay drive assembly retaining bus bar to EMI (+) (Fig. 53). Remove bus bar.

(11) Loosen nut on filter assembly retaining bus bar from relay drive assembly and move bus bar out of the way.

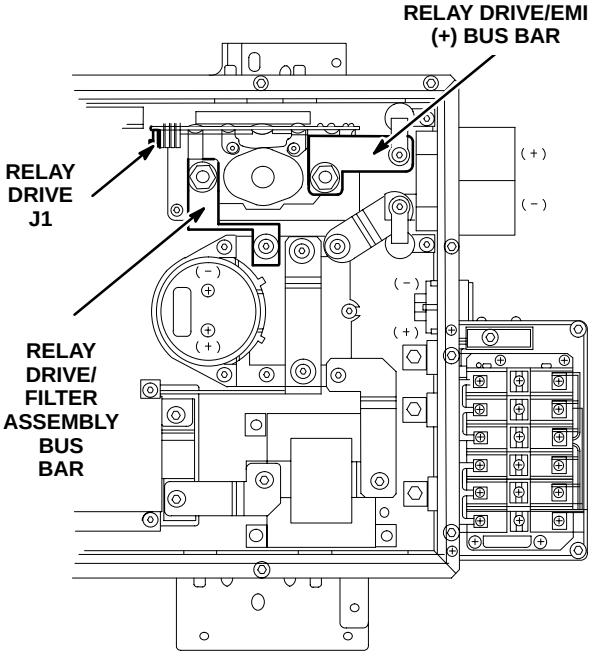

Fig. 53 Bus Bar

(12) Disconnect mother board to relay drive assembly connector J1 at relay drive assembly (Fig. 54).

(13) Remove J2 and J3 connectors on relay drive assembly from PCA pilot line and power distribution box.

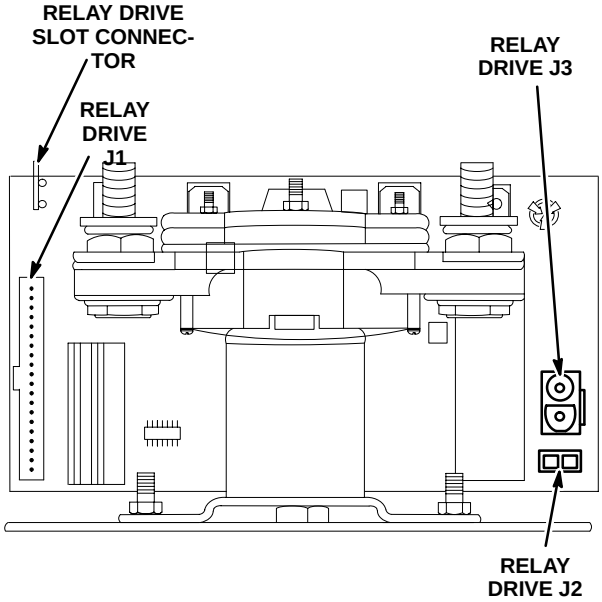

Fig. 54 Relay Drive Assembly

(14) Remove nuts (2) retaining relay drive assembly base plate to PCA base plate.

(15) Remove relay drive assembly (Fig. 55).

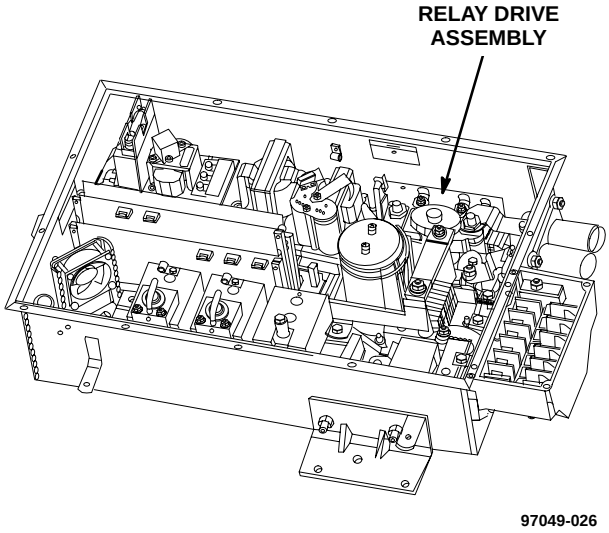

Fig. 55 Relay Drive Assembly

RELAY DRIVE ASSEMBLY (Continued)

INSTALLATION

(1) Install relay drive assembly. Torque mounting nuts to 2 N•m (18 in. lbs.).
(2) Install connector from mother board.
(3) Install connectors (2) from power distribution box and PCA pilot line.
(4) Install bus bar from filter assembly. Torque to 5 N•m (44 in. lbs.).
(5) Install bus bar on relay drive assembly from PCA C3(+).
(6) Install rear EMI filter. Torque lower nut to 2 N•m (18 in. lbs.).
(7) Install wires and nut on EMI (+) filter terminal stud. Torque to 4 N•m (35 in. lbs.).
(8) Install cable from power distribution box stud to relay drive. Install retaining nut and washers. Torque to 10 N•m (90 in. lbs.).
(9) Connect wire from EMI (–) filter terminal stud to relay drive circuit board.
(10) Install (+) and (–) output leads to APC filter stage and torque nuts to 2 N•m (18 in. lbs.).
(11) Install PCA cover.
(12) Install bolts (12) attaching PCA cover to PCA. Torque to 23 N•m (18 in. lbs.).
(13) Install cover to Power Distribution Box on the PCA.
(14) Connect the auxiliary battery negative cable.
(15) Enable the traction battery pack by turning the high voltage service disconnect switch to On.

TORQUE SPECIFICATIONS

DESCRIPTION	TORQUE
Accelerator	11 N•m (97 in. lbs.)
APC Filter Stage	2 N•m (18 in. lbs.)
APC Power Stage	2 N•m (18 in. lbs.)
EMI Filter to PCA Base	2 N•m (18 in. lbs.)
Filter Assembly to PCA Base	2 N•m (23 in. lbs.)
Filter Assembly to IGBT Bus Bar	5 N•m (44 in. lbs.)
Filter Assembly to L1 Inductor Bus Bar	5 N•m (44 in. lbs.)
Filter Dryer to A/C Controller	8 N•m (70 in. lbs.)
IGBT to PCA Base	2 N•m (18 in. lbs.)
L1 Inductor to PCA Base	2 N•m (18 in. lbs.)
Mother Board to PCA Base	2 N•m (18 in. lbs.)
On Board Charger	31 N•m (23 ft. lbs.)
PCA Mounting Bolts	31 N•m (23 ft. lbs.)
Phase Wire to Current Sensor	8 N•m (71 in. lbs.)
Power Distribution Box to PCA	2 N•m (18 in. lbs.)
Power Distribution Box High Voltage Leads	4 N•m (35 in. lbs.)
PCA Coolant Fan	4 N•m (35 in. lbs.)
PCA C3 Terminal Stud Nuts	4 N•m (35 in. lbs.)
Snubber Capacitor to IGBT	8 N•m (71 in. lbs.)

WIRING DIAGRAMS

TABLE OF CONTENTS

PAGE

A/C COMPRESSOR 9A–145
A/C COMPRESSOR CONTROLLER 9A–134, 145
ACCELERATOR PEDAL MODULE 9A–144
ACCELERATOR IDLE POSITION SWITCH 9A–144
AUXILIARY BATTERY 9A–132, 136, 139, 140
AUXILIARY BATTERY TEMPERATURE SENSOR 9A–132, 136
AUXILIARY POWER CONVERTER 9A–132, 133
BATTERY INTERFACE CENTER . . 9A–134, 35, 40, 45
BATTERY PACK COOLANT PUMP 9A–134
BRAKE LAMP SWITCH 9A–143
BRAKE PRESSURE SENSOR NO. 1 . . . . . 9A–142
BRAKE PRESSURE SENSOR NO. 2 . . . . . 9A–142
BRAKE PRESSURE SWITCH 9A–142
BS2 . . . . . 9A–138
BS3 . . . . . 9A–144
BS4 . . . . . 9A–143
BS5 . . . . . 9A–143
BS6 . . . . . 9A–143
CHASSIS VECTOR CONTROLLER 9A–133
COMBINATION FLASHER 9A–142
CONTROLLER ANTI–LOCK BRAKE 9A–143
DATA LINK CONNECTOR 9A–141
DIAGNOSTIC CONNECTOR 9A–141
DISCHARGE RESISTOR 9A–133
FUSE 2 (JB) 9A–137
FUSE 10 (JB) 9A–137
FUSE 12 (JB) 9A–138
FUSIBLE LINK 9A–132, 136
G101 . . . . . 9A–140
G103 . . . . . 9A–139, 140
G108 . . . . . 9A–132, 136
G200 . . . . . 9A–141
G300 . . . . . 9A–142, 143
G302 . . . . . 9A–138
HIGH VOLTAGE POWER DISTRIBUTION BLOCK 9A–134, 135
HVAC CONTROL HEAD 9A–141
INSTRUMENT CLUSTER 9A–141
JLVS1 . . . . . 9A–132, 136
JUNCTION BLOCK 9A–137, 138, 142
LEFT FRONT PARK/TURN SIGNAL LAMP 9A–143

PAGE

LEFT REAR LAMP ASSEMBLY 9A–138
LVS1 . . . . . 9A–139, 140
LVS2 . . . . . 9A–138
LVS6 . . . . . 9A–140
LVS7 . . . . . 9A–140
LVS8 . . . . . 9A–139, 140
LVS12 . . . . . 9A–142
LVS14 . . . . . 9A–137
LVS15 . . . . . 9A–137
LVS17 . . . . . 9A–142
LVS18 . . . . . 9A–143
LVS19 . . . . . 9A–143
LVS31 . . . . . 9A–139
LVS60 . . . . . 9A–143
LVS61 . . . . . 9A–143
MAIN CONTROL MODULE 9A–132, 136, 137, 140, 141
MESSAGE CENTER 9A–142
OIL PUMP 9A–135, 139, 145
PARK BRAKE SWITCH 9A–142
POWER BRIDGE 9A–131, 133
POWER DISTRIBUTION BOX 9A–133
POWER DISTRIBUTION BOX DOOR INTERLOCK SWITCH 9A–133
POWER DISTRIBUTION CENTER 9A–132, 136
POWER STEERING PUMP 9A–135, 139
POWERTRAIN CONTROLLER ASSEMBLY 9A–131, 132, 133, 134, 135, 136, 137, 138, 139, 140, 141, 142, 143, 144, 145
POWERTRAIN CONTROLLER ASSEMBLY RELAY 9A–132, 133, 135
PRECHARGE RESISTOR 9A–133
PRECHARGE/DISCHARGE RELAY 9A–133
PS1 . . . . . 9A–141
PS2 . . . . . 9A–141
PS10 . . . . . 9A–141
PTC HEATER 9A–134
PTC HEATER CONTROLLER 9A–135
RESOLVER 9A–131
RIGHT REAR LAMP ASSEMBLY 9A–138
TRACTION MOTOR 9A–131
TRANSMISSION RANGE SWITCH 9A–138
VACUUM PUMP RELAY MODULE 9A–138
VECTOR CONTROLLER 9A–131

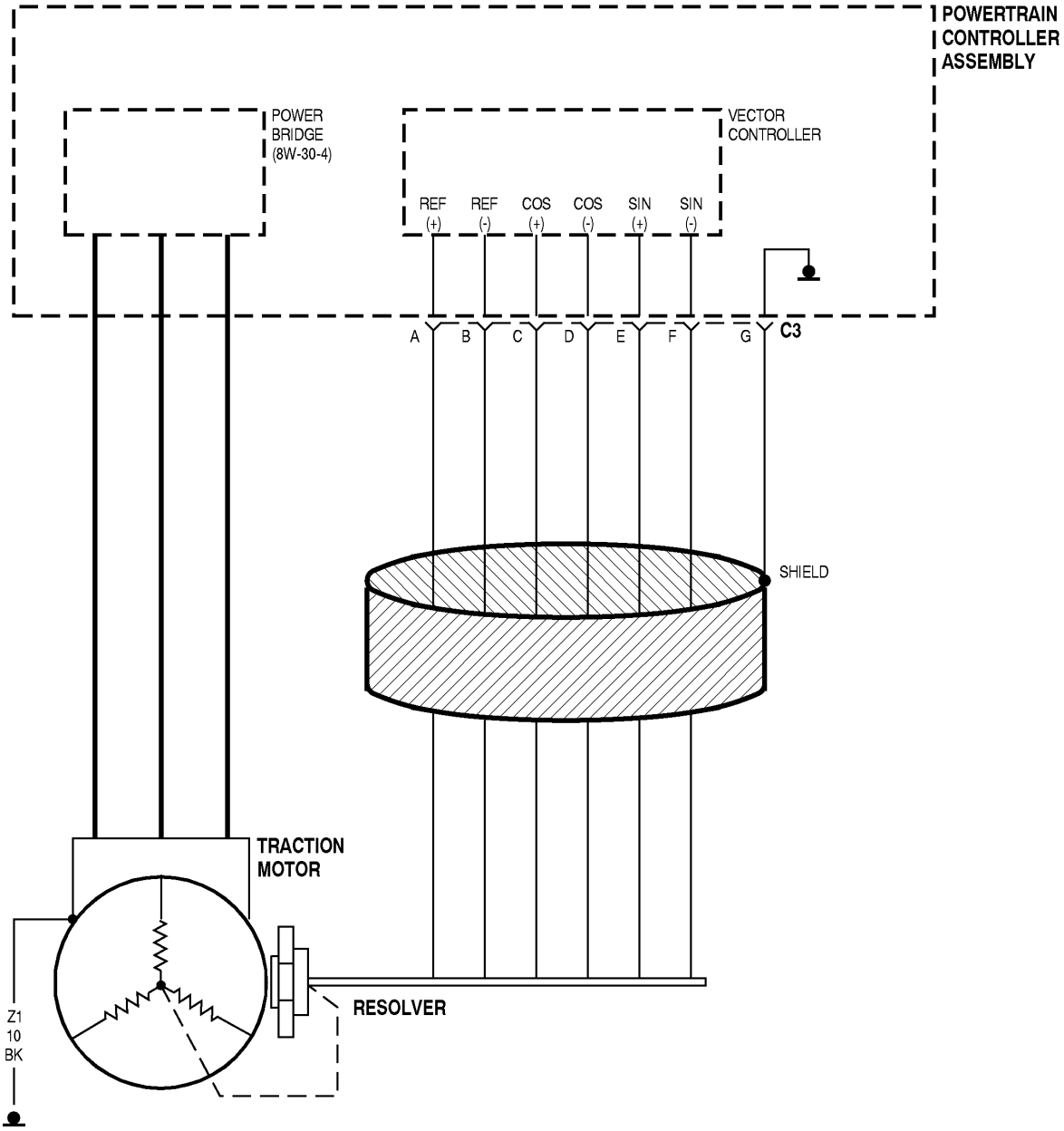
POWERTRAIN
CONTROLLER
ASSEMBLY
POWER
BRIDGE
(8W-30-4)
VECTOR
CONTROLLER
REF (+)
REF (-)
COS (+)
COS (-)
SIN (+)
SIN (-)
A
B
C
D
E
F
G
C3
SHIELD
TRACTION
MOTOR
RESOLVER
Z1
10
BK

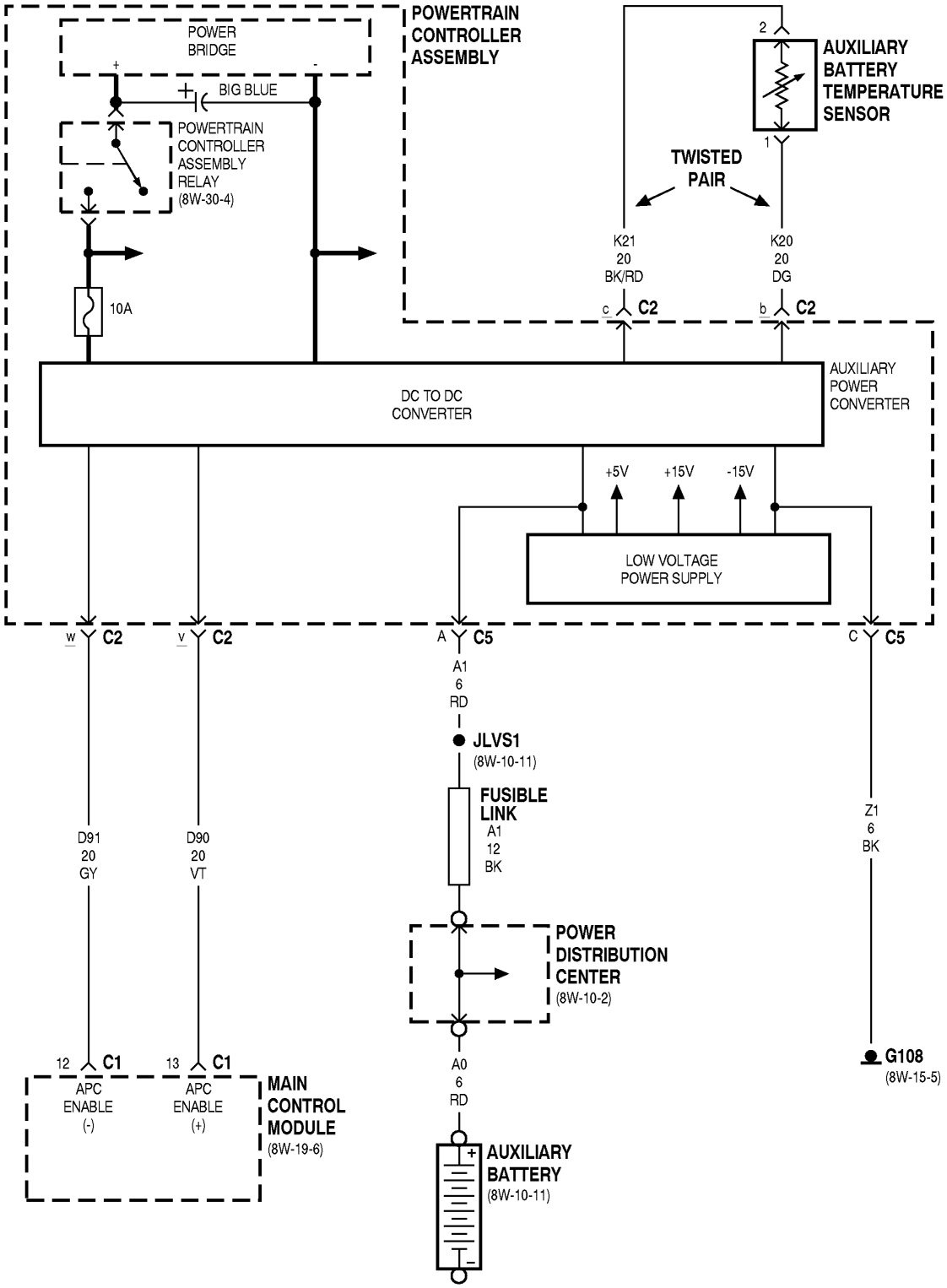
POWERTRAIN CONTROLLER ASSEMBLY
POWER BRIDGE
BIG BLUE
POWERTRAIN CONTROLLER ASSEMBLY RELAY (8W-30-4)
10A
AUXILIARY BATTERY TEMPERATURE SENSOR
TWISTED PAIR
K21 20 BK/RD
K20 20 DG
C2
DC TO DC CONVERTER
AUXILIARY POWER CONVERTER
+5V
+15V
-15V
LOW VOLTAGE POWER SUPPLY
C5
A1 6 RD
JLVS1 (8W-10-11)
FUSIBLE LINK A1 12 BK
Z1 6 BK
D91 20 GY
D90 20 VT
POWER DISTRIBUTION CENTER (8W-10-2)
C1
APC ENABLE (-)
APC ENABLE (+)
MAIN CONTROL MODULE (8W-19-6)
A0 6 RD
AUXILIARY BATTERY (8W-10-11)
G108 (8W-15-5)

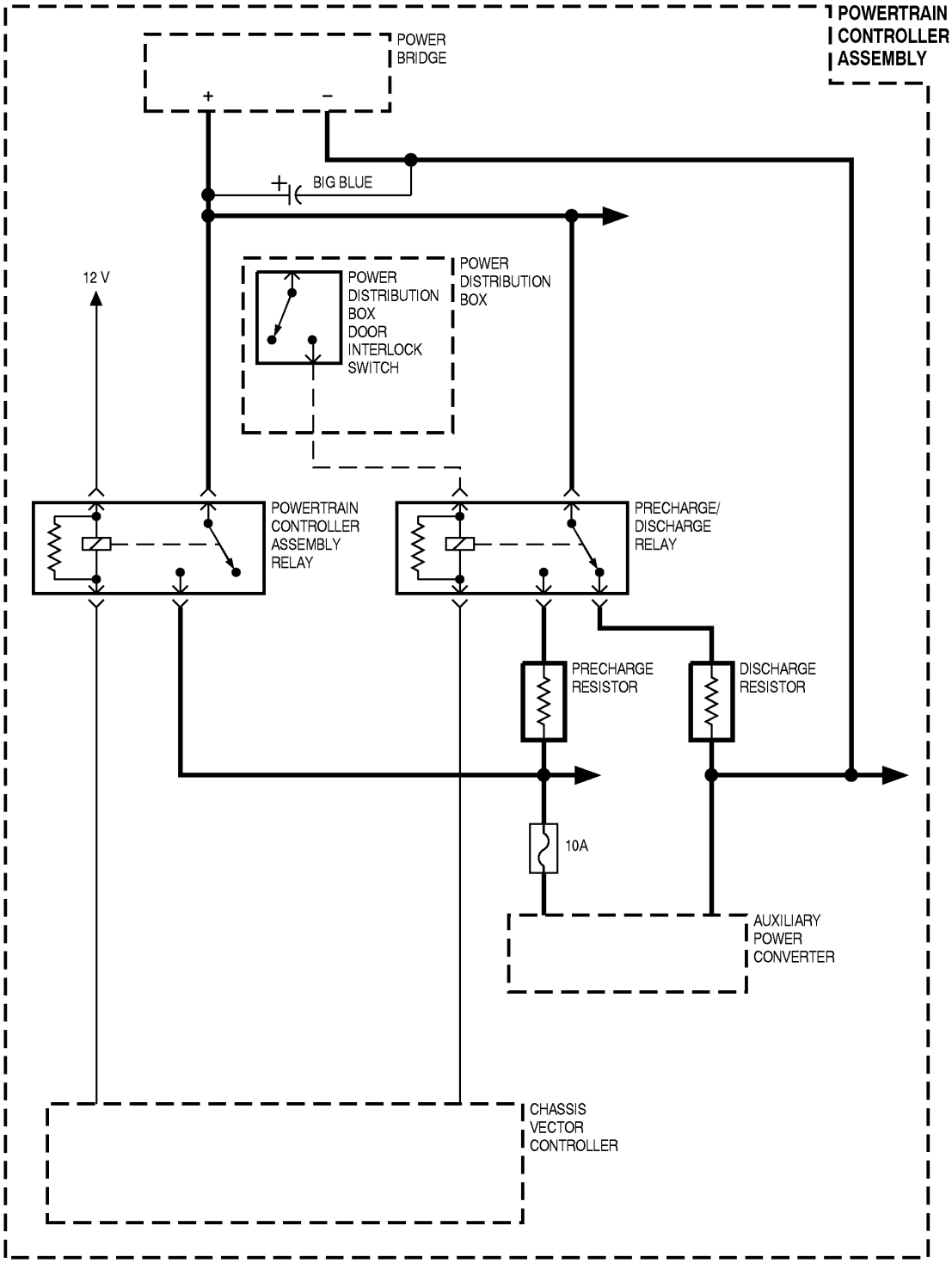
POWERTRAIN CONTROLLER ASSEMBLY
POWER BRIDGE
+
–
BIG BLUE
12 V
POWER DISTRIBUTION BOX
POWER DISTRIBUTION BOX DOOR INTERLOCK SWITCH
POWERTRAIN CONTROLLER ASSEMBLY RELAY
PRECHARGE/ DISCHARGE RELAY
PRECHARGE RESISTOR
DISCHARGE RESISTOR
10A
AUXILIARY POWER CONVERTER
CHASSIS VECTOR CONTROLLER

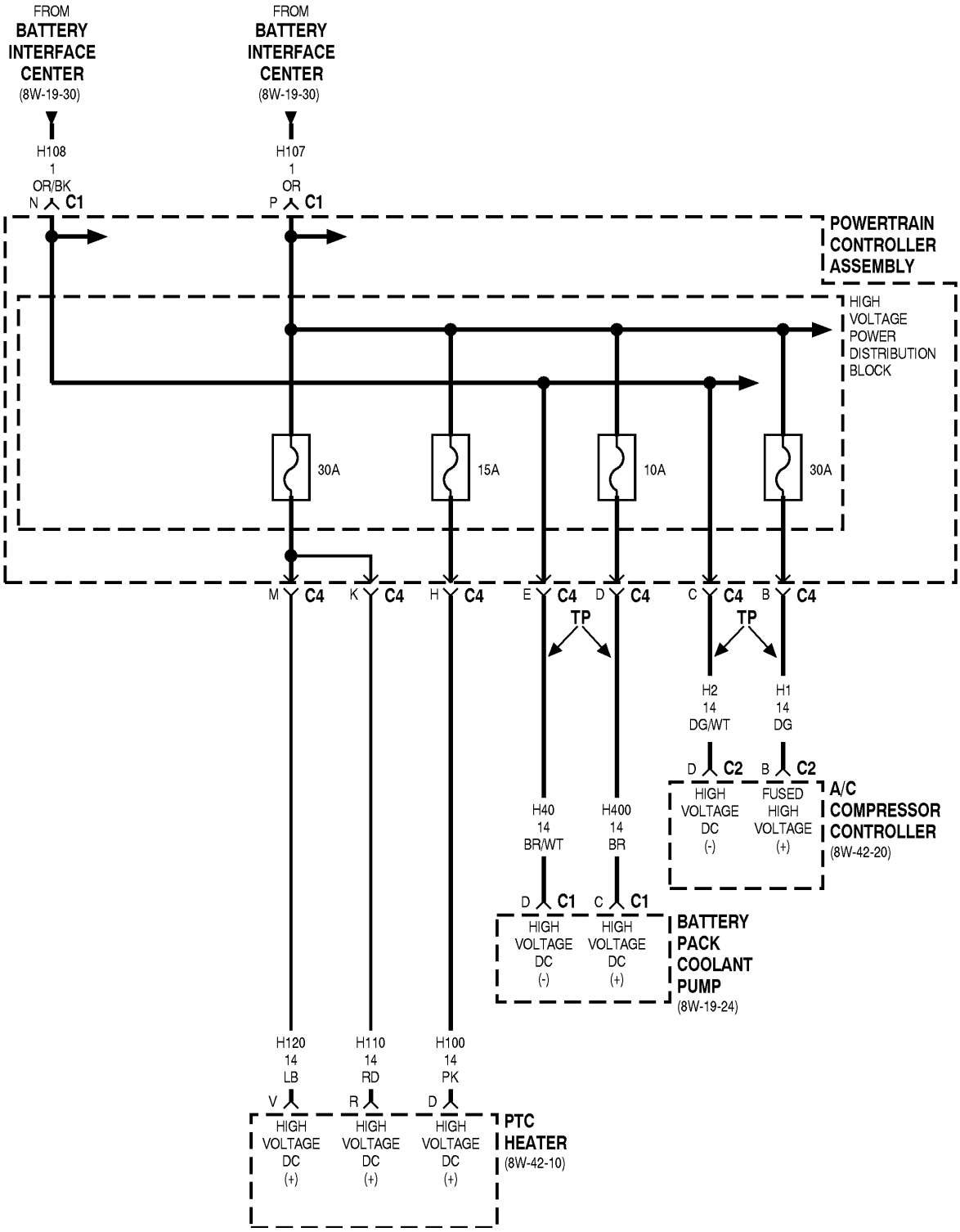
FROM
BATTERY
INTERFACE
CENTER
(8W-19-30)
H108
1
OR/BK
N C1
FROM
BATTERY
INTERFACE
CENTER
(8W-19-30)
H107
1
OR
P C1
POWERTRAIN
CONTROLLER
ASSEMBLY
HIGH
VOLTAGE
POWER
DISTRIBUTION
BLOCK
30A
15A
10A
30A
M C4
K C4
H C4
E C4
D C4
C C4
B C4
TP
TP
H2
14
DG/WT
H1
14
DG
D C2
B C2
HIGH
VOLTAGE
DC
(-)
FUSED
HIGH
VOLTAGE
(+)
A/C
COMPRESSOR
CONTROLLER
(8W-42-20)
H40
14
BR/WT
H400
14
BR
D C1
C C1
HIGH
VOLTAGE
DC
(-)
HIGH
VOLTAGE
DC
(+)
BATTERY
PACK
COOLANT
PUMP
(8W-19-24)
H120
14
LB
H110
14
RD
H100
14
PK
V
R
D
HIGH
VOLTAGE
DC
(+)
HIGH
VOLTAGE
DC
(+)
HIGH
VOLTAGE
DC
(+)
PTC
HEATER
(8W-42-10)

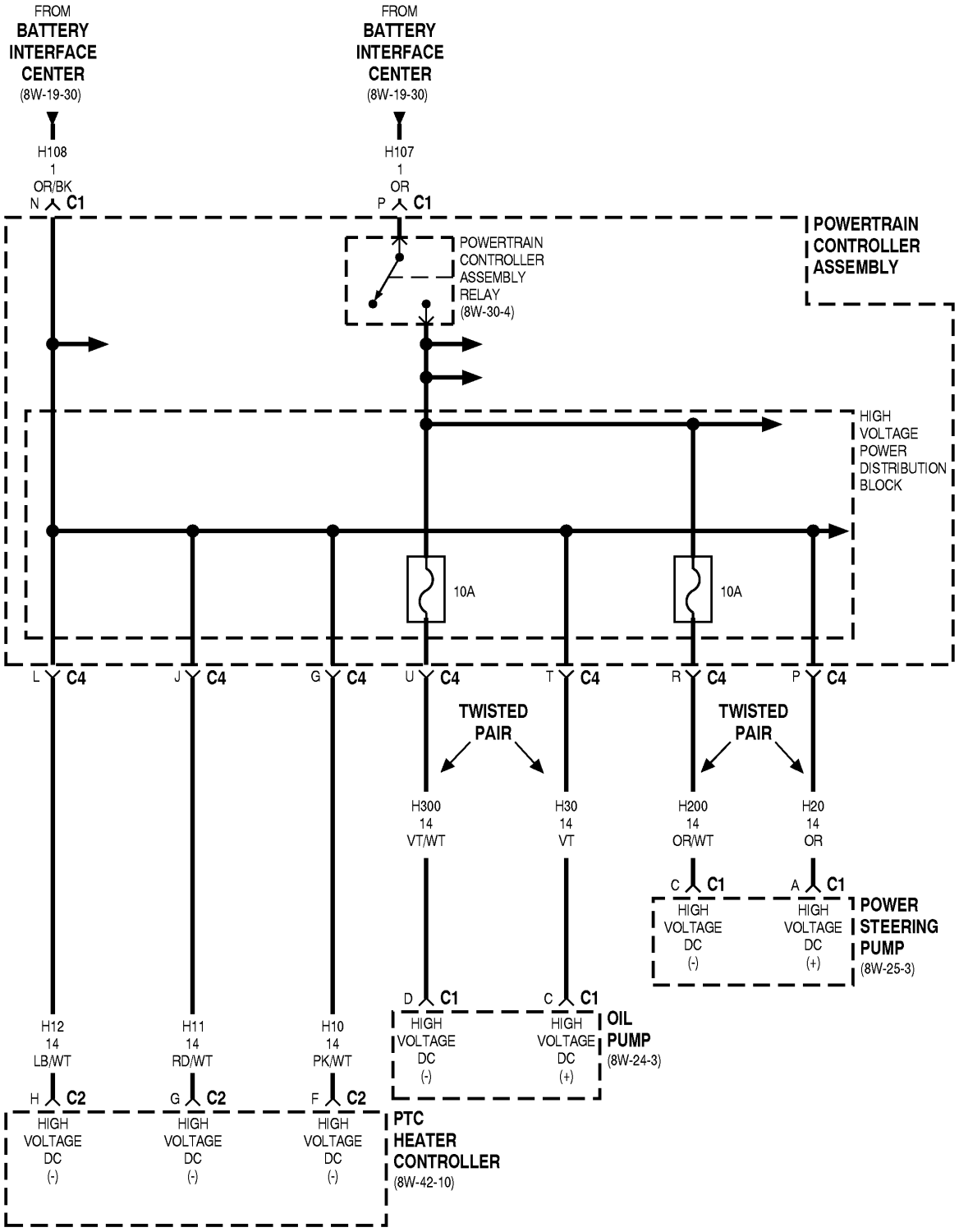
FROM
BATTERY
INTERFACE
CENTER
(8W-19-30)
H108
1
OR/BK
N C1
FROM
BATTERY
INTERFACE
CENTER
(8W-19-30)
H107
1
OR
P C1
POWERTRAIN
CONTROLLER
ASSEMBLY
RELAY
(8W-30-4)
POWERTRAIN
CONTROLLER
ASSEMBLY
HIGH
VOLTAGE
POWER
DISTRIBUTION
BLOCK
10A
10A
L C4
J C4
G C4
U C4
T C4
R C4
P C4
TWISTED
PAIR
TWISTED
PAIR
H300
14
VT/WT
H30
14
VT
H200
14
OR/WT
H20
14
OR
C C1
A C1
HIGH
VOLTAGE
DC
(-)
HIGH
VOLTAGE
DC
(+)
POWER
STEERING
PUMP
(8W-25-3)
D C1
C C1
HIGH
VOLTAGE
DC
(-)
HIGH
VOLTAGE
DC
(+)
OIL
PUMP
(8W-24-3)
H12
14
LB/WT
H11
14
RD/WT
H10
14
PK/WT
H C2
G C2
F C2
HIGH
VOLTAGE
DC
(-)
HIGH
VOLTAGE
DC
(-)
HIGH
VOLTAGE
DC
(-)
PTC
HEATER
CONTROLLER
(8W-42-10)

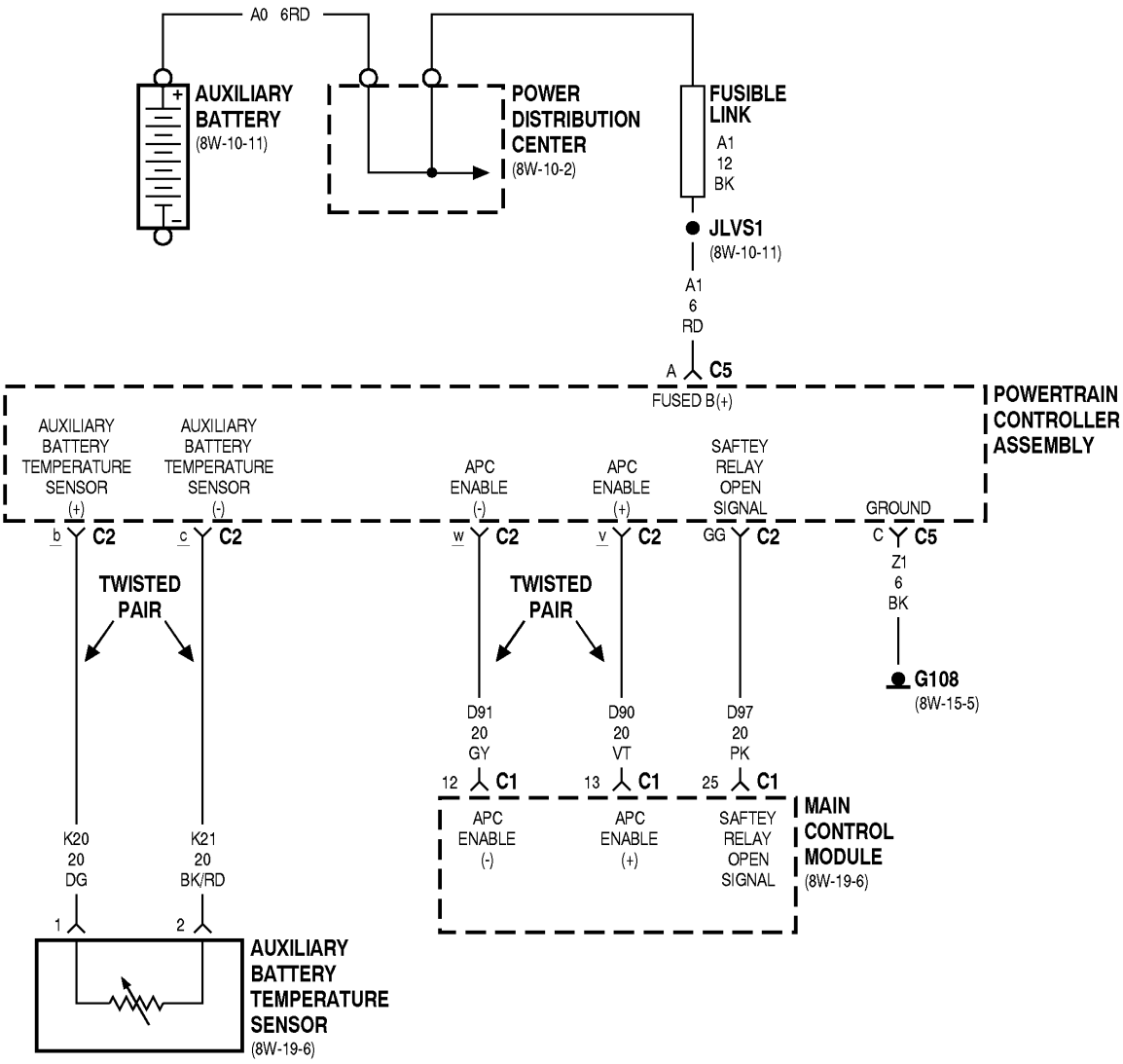
A0 6RD
AUXILIARY BATTERY
(8W-10-11)
POWER DISTRIBUTION CENTER
(8W-10-2)
FUSIBLE LINK
A1
12
BK
JLVS1
(8W-10-11)
A1
6
RD
A C5
FUSED B(+)
POWERTRAIN CONTROLLER ASSEMBLY
AUXILIARY BATTERY TEMPERATURE SENSOR (+)
AUXILIARY BATTERY TEMPERATURE SENSOR (-)
APC ENABLE (-)
APC ENABLE (+)
SAFTEY RELAY OPEN SIGNAL
GROUND
b C2
c C2
w C2
v C2
GG C2
C C5
Z1
6
BK
G108
(8W-15-5)
TWISTED PAIR
TWISTED PAIR
D91
20
GY
D90
20
VT
D97
20
PK
12 C1
13 C1
25 C1
APC ENABLE (-)
APC ENABLE (+)
SAFTEY RELAY OPEN SIGNAL
MAIN CONTROL MODULE
(8W-19-6)
K20
20
DG
K21
20
BK/RD
1
2
AUXILIARY BATTERY TEMPERATURE SENSOR
(8W-19-6)

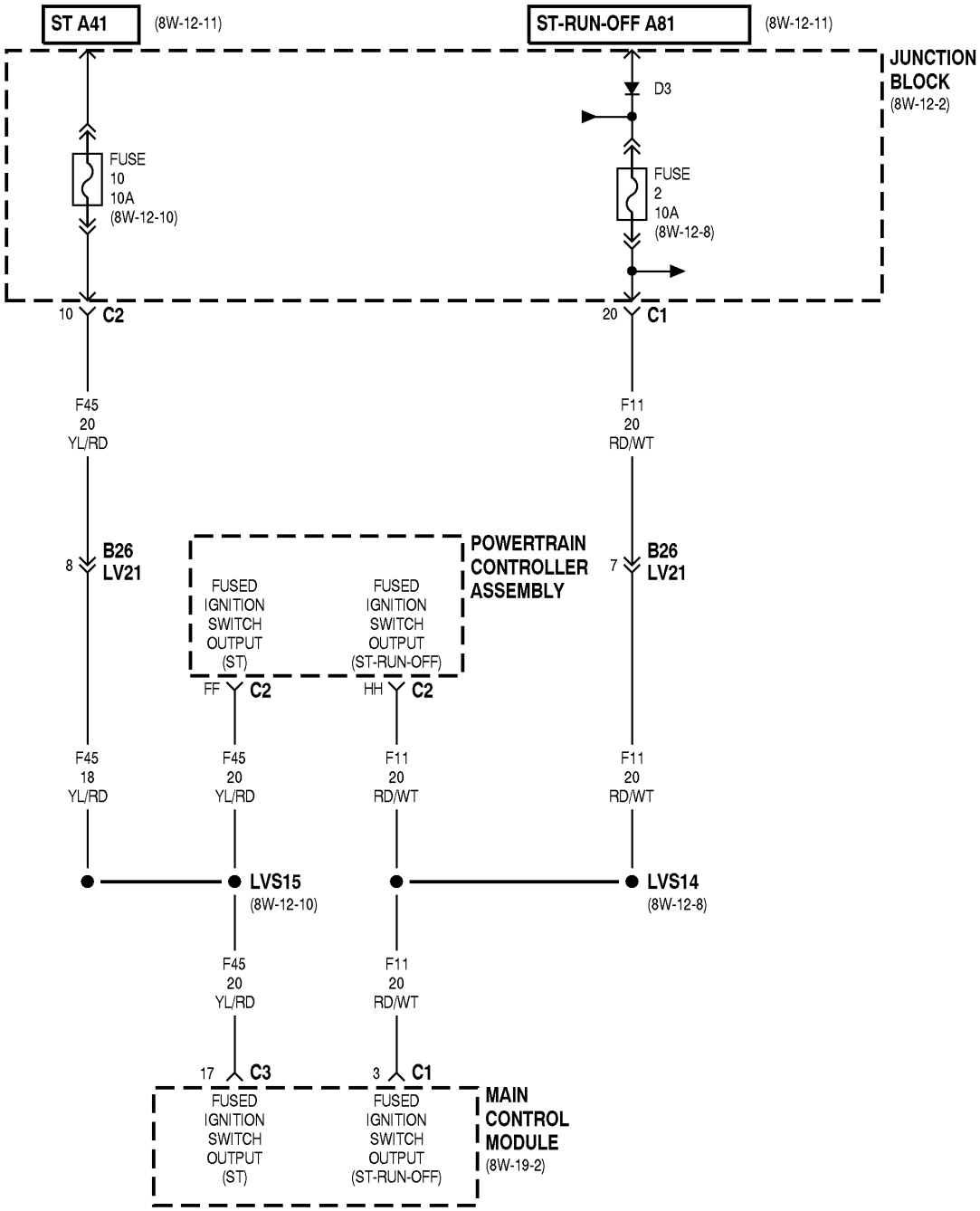
ST A41
(8W-12-11)
ST-RUN-OFF A81
(8W-12-11)
JUNCTION BLOCK
(8W-12-2)
D3
FUSE 10 10A (8W-12-10)
FUSE 2 10A (8W-12-8)
10 C2
20 C1
F45 20 YL/RD
F11 20 RD/WT
8 B26 LV21
7 B26 LV21
POWERTRAIN CONTROLLER ASSEMBLY
FUSED IGNITION SWITCH OUTPUT (ST)
FUSED IGNITION SWITCH OUTPUT (ST-RUN-OFF)
FF C2
HH C2
F45 18 YL/RD
F45 20 YL/RD
F11 20 RD/WT
F11 20 RD/WT
LVS15
(8W-12-10)
LVS14
(8W-12-8)
F45 20 YL/RD
F11 20 RD/WT
17 C3
3 C1
MAIN CONTROL MODULE
(8W-19-2)
FUSED IGNITION SWITCH OUTPUT (ST)
FUSED IGNITION SWITCH OUTPUT (ST-RUN-OFF)

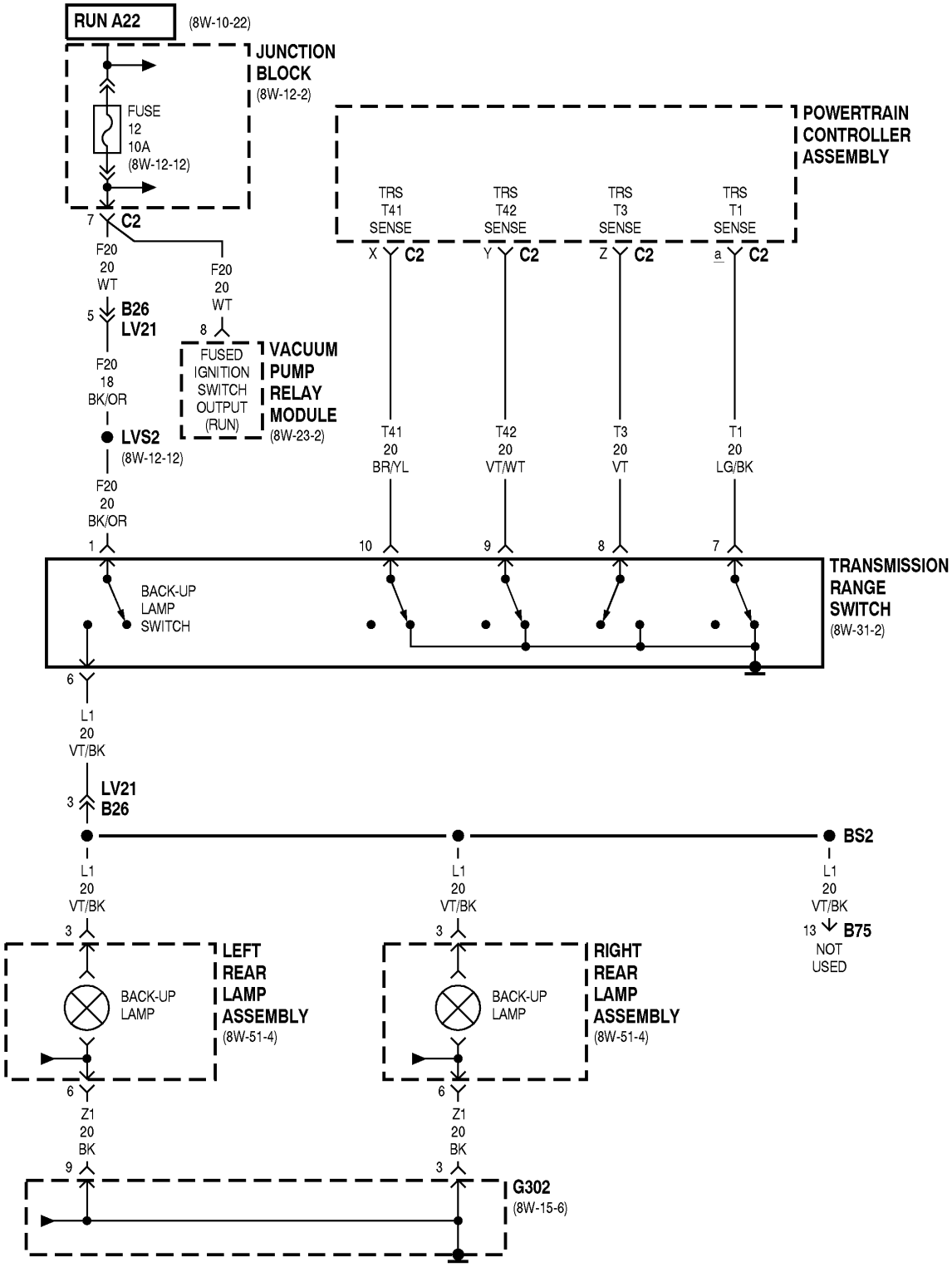
RUN A22
(8W-10-22)
JUNCTION BLOCK
(8W-12-2)
FUSE 12 10A
(8W-12-12)
7
C2
F20 20 WT
5
B26
LV21
F20 18 BK/OR
LVS2
(8W-12-12)
F20 20 BK/OR
1
F20 20 WT
8
FUSED IGNITION SWITCH OUTPUT (RUN)
VACUUM PUMP RELAY MODULE
(8W-23-2)
POWERTRAIN CONTROLLER ASSEMBLY
TRS T41 SENSE
TRS T42 SENSE
TRS T3 SENSE
TRS T1 SENSE
X C2
Y C2
Z C2
a C2
T41 20 BR/YL
T42 20 VT/WT
T3 20 VT
T1 20 LG/BK
10
9
8
7
BACK-UP LAMP SWITCH
TRANSMISSION RANGE SWITCH
(8W-31-2)
6
L1 20 VT/BK
3
LV21
B26
BS2
L1 20 VT/BK
3
L1 20 VT/BK
3
L1 20 VT/BK
13
B75
NOT USED
BACK-UP LAMP
LEFT REAR LAMP ASSEMBLY
(8W-51-4)
BACK-UP LAMP
RIGHT REAR LAMP ASSEMBLY
(8W-51-4)
6
Z1 20 BK
9
6
Z1 20 BK
3
G302
(8W-15-6)

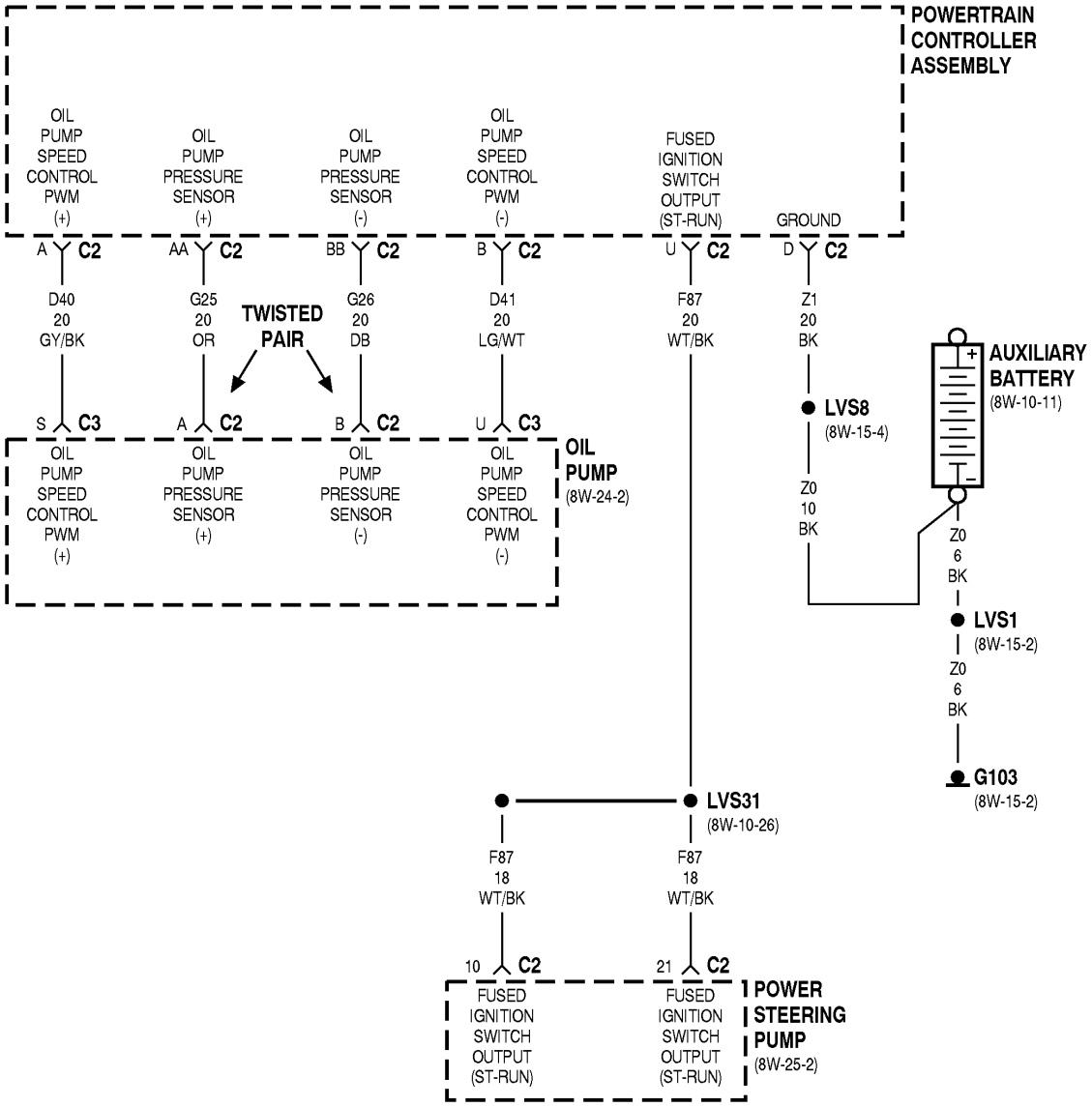
POWERTRAIN CONTROLLER ASSEMBLY
OIL PUMP SPEED CONTROL PWM (+)
OIL PUMP PRESSURE SENSOR (+)
OIL PUMP PRESSURE SENSOR (-)
OIL PUMP SPEED CONTROL PWM (-)
FUSED IGNITION SWITCH OUTPUT (ST-RUN)
GROUND
A C2
AA C2
BB C2
B C2
U C2
D C2
D40 20 GY/BK
G25 20 OR
TWISTED PAIR
G26 20 DB
D41 20 LG/WT
F87 20 WT/BK
Z1 20 BK
AUXILIARY BATTERY (8W-10-11)
LVS8 (8W-15-4)
S C3
A C2
B C2
U C3
OIL PUMP SPEED CONTROL PWM (+)
OIL PUMP PRESSURE SENSOR (+)
OIL PUMP PRESSURE SENSOR (-)
OIL PUMP SPEED CONTROL PWM (-)
OIL PUMP (8W-24-2)
Z0 10 BK
Z0 6 BK
LVS1 (8W-15-2)
Z0 6 BK
G103 (8W-15-2)
LVS31 (8W-10-26)
F87 18 WT/BK
F87 18 WT/BK
10 C2
21 C2
FUSED IGNITION SWITCH OUTPUT (ST-RUN)
FUSED IGNITION SWITCH OUTPUT (ST-RUN)
POWER STEERING PUMP (8W-25-2)

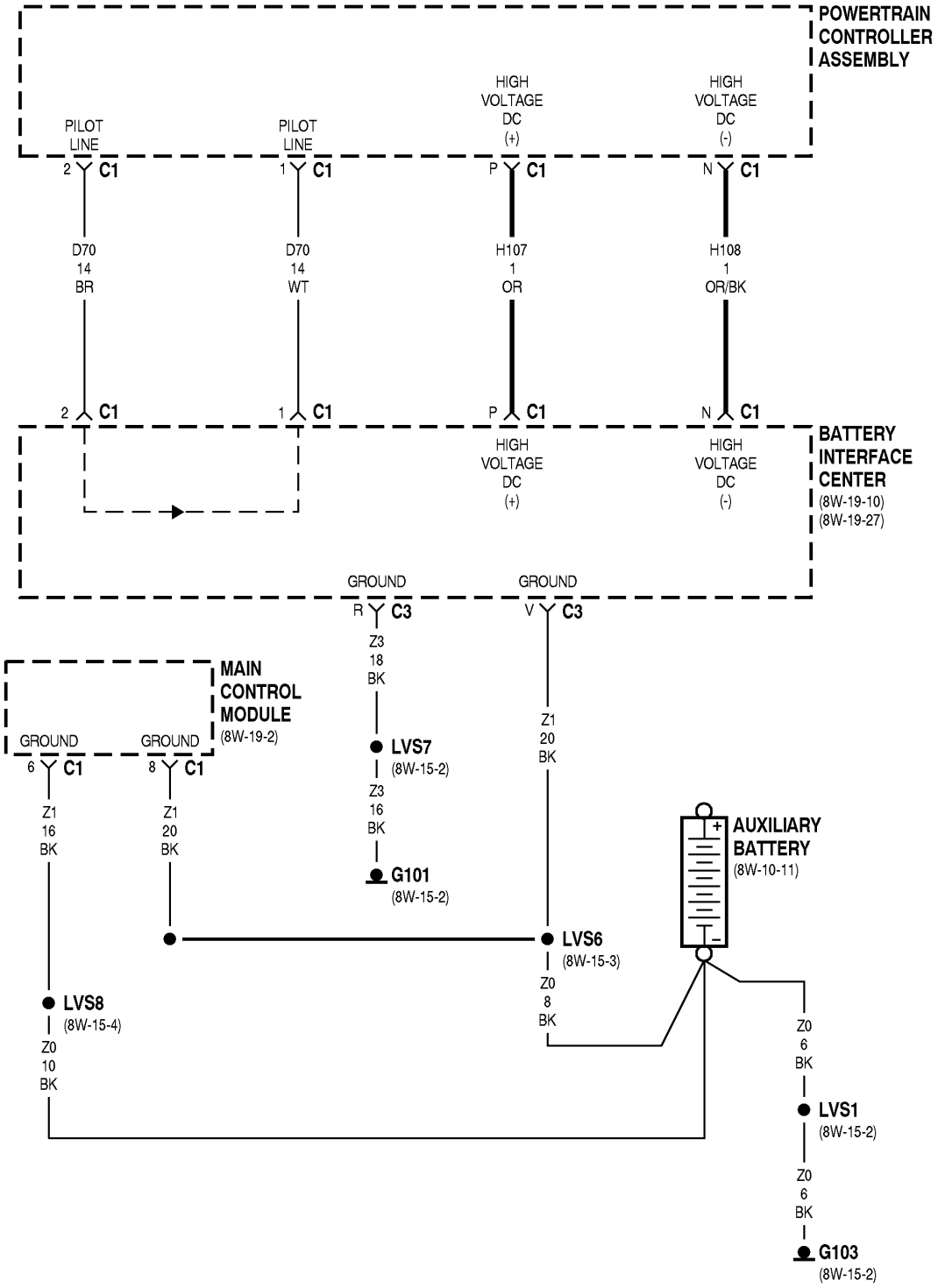
POWERTRAIN CONTROLLER ASSEMBLY
PILOT LINE
2 C1
PILOT LINE
1 C1
HIGH VOLTAGE DC (+)
P C1
HIGH VOLTAGE DC (-)
N C1
D70 14 BR
D70 14 WT
H107 1 OR
H108 1 OR/BK
2 C1
1 C1
P C1
N C1
BATTERY INTERFACE CENTER
(8W-19-10)
(8W-19-27)
HIGH VOLTAGE DC (+)
HIGH VOLTAGE DC (-)
GROUND
R C3
GROUND
V C3
Z3 18 BK
MAIN CONTROL MODULE
(8W-19-2)
GROUND
6 C1
GROUND
8 C1
LVS7
(8W-15-2)
Z3 16 BK
G101
(8W-15-2)
Z1 20 BK
Z1 16 BK
Z1 20 BK
AUXILIARY BATTERY
(8W-10-11)
LVS6
(8W-15-3)
Z0 8 BK
LVS8
(8W-15-4)
Z0 10 BK
Z0 6 BK
LVS1
(8W-15-2)
Z0 6 BK
G103
(8W-15-2)

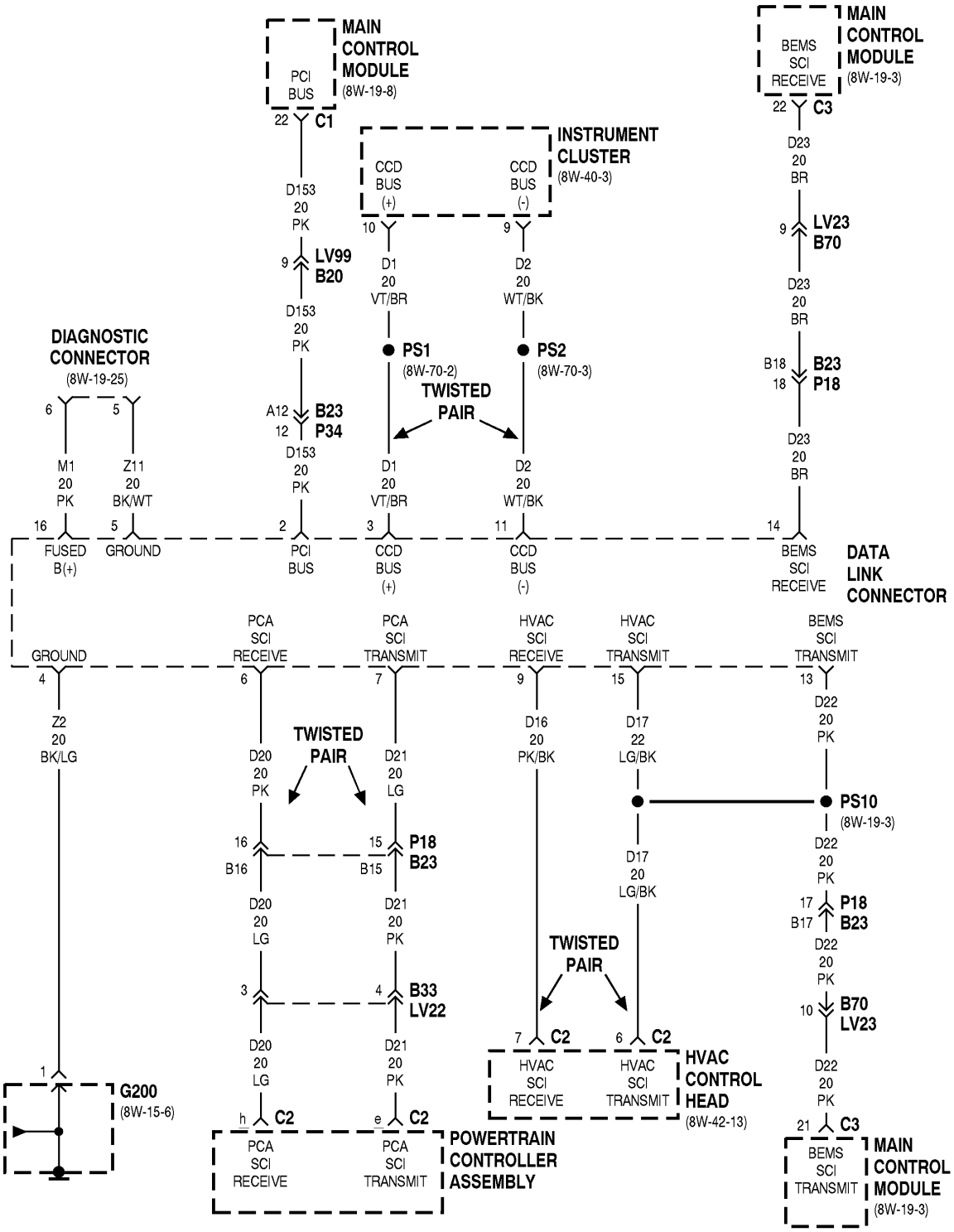
MAIN CONTROL MODULE (8W-19-8)
PCI BUS
22 C1
D153 20 PK
9 LV99 B20
D153 20 PK
A12 12 B23 P34
D153 20 PK
INSTRUMENT CLUSTER (8W-40-3)
CCD BUS (+)
CCD BUS (-)
10
9
D1 20 VT/BR
D2 20 WT/BK
PS1 (8W-70-2)
PS2 (8W-70-3)
TWISTED PAIR
D1 20 VT/BR
D2 20 WT/BK
MAIN CONTROL MODULE (8W-19-3)
BEMS SCI RECEIVE
22 C3
D23 20 BR
9 LV23 B70
D23 20 BR
B18 18 B23 P18
D23 20 BR
DIAGNOSTIC CONNECTOR (8W-19-25)
6
5
M1 20 PK
Z11 20 BK/WT
16 FUSED B(+)
5 GROUND
2 PCI BUS
3 CCD BUS (+)
11 CCD BUS (-)
14 BEMS SCI RECEIVE
DATA LINK CONNECTOR
GROUND 4
PCA SCI RECEIVE 6
PCA SCI TRANSMIT 7
HVAC SCI RECEIVE 9
HVAC SCI TRANSMIT 15
BEMS SCI TRANSMIT 13
Z2 20 BK/LG
D20 20 PK
TWISTED PAIR
D21 20 LG
D16 20 PK/BK
D17 22 LG/BK
D22 20 PK
PS10 (8W-19-3)
16 B16
15 B15
P18 B23
D17 20 LG/BK
D22 20 PK
17 B17 P18 B23
D20 20 LG
D21 20 PK
TWISTED PAIR
D22 20 PK
3
4 B33 LV22
10 B70 LV23
D20 20 LG
D21 20 PK
7 C2
6 C2
HVAC SCI RECEIVE
HVAC SCI TRANSMIT
HVAC CONTROL HEAD (8W-42-13)
1
G200 (8W-15-6)
h C2
e C2
PCA SCI RECEIVE
PCA SCI TRANSMIT
POWERTRAIN CONTROLLER ASSEMBLY
D22 20 PK
21 C3
BEMS SCI TRANSMIT
MAIN CONTROL MODULE (8W-19-3)

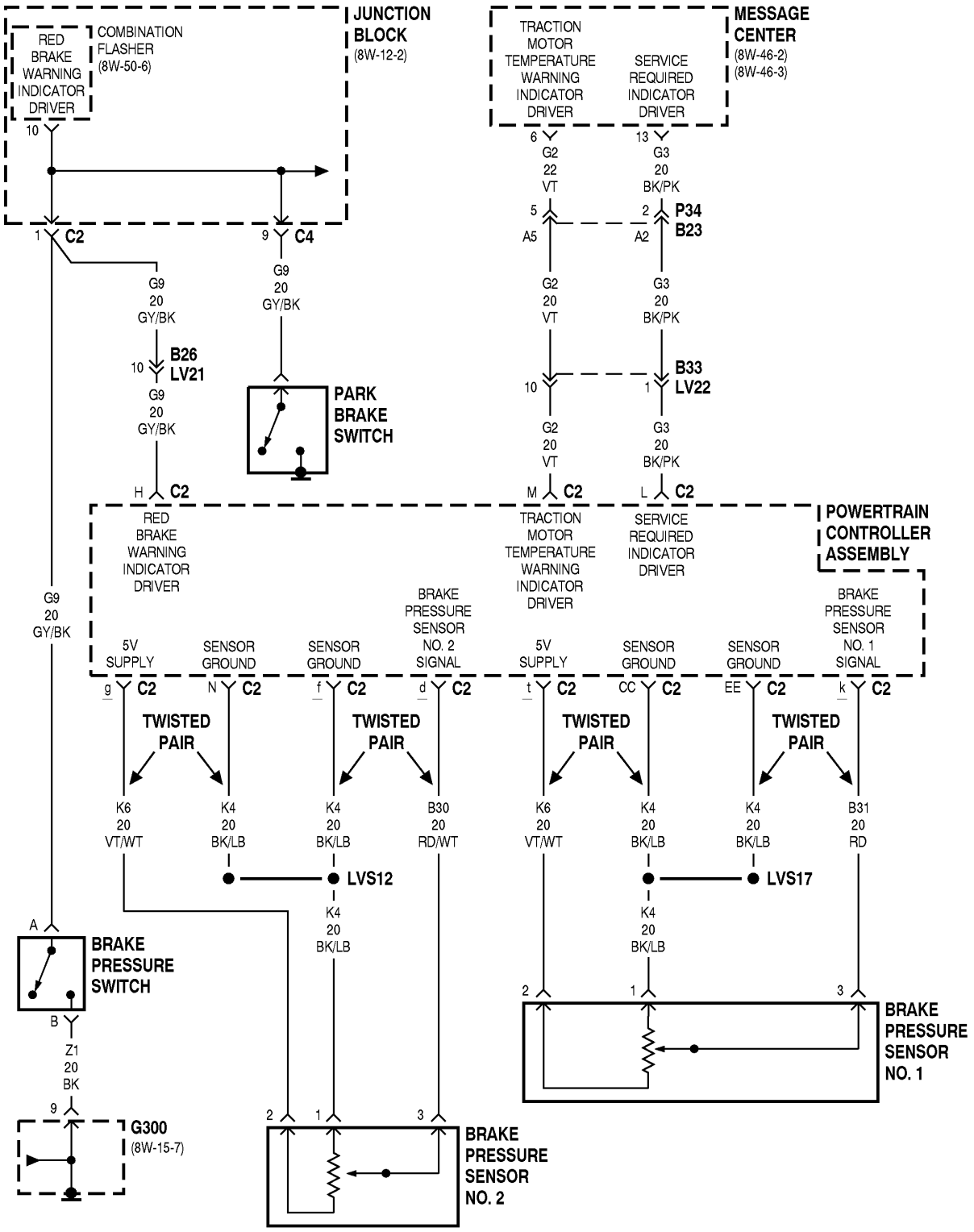
JUNCTION BLOCK (8W-12-2)
RED BRAKE WARNING INDICATOR DRIVER
COMBINATION FLASHER (8W-50-6)
10
1 C2
9 C4
G9 20 GY/BK
B26 LV21
PARK BRAKE SWITCH
MESSAGE CENTER (8W-46-2) (8W-46-3)
TRACTION MOTOR TEMPERATURE WARNING INDICATOR DRIVER
SERVICE REQUIRED INDICATOR DRIVER
6 G2 22 VT
13 G3 20 BK/PK
5 A5
2 A2
P34 B23
G2 20 VT
G3 20 BK/PK
B33 LV22
H C2
M C2
L C2
POWERTRAIN CONTROLLER ASSEMBLY
BRAKE PRESSURE SENSOR NO. 2 SIGNAL
BRAKE PRESSURE SENSOR NO. 1 SIGNAL
5V SUPPLY
SENSOR GROUND
g C2
N C2
f C2
d C2
t C2
CC C2
EE C2
k C2
TWISTED PAIR
K6 20 VT/WT
K4 20 BK/LB
B30 20 RD/WT
B31 20 RD
LVS12
LVS17
A
BRAKE PRESSURE SWITCH
B
Z1 20 BK
9
G300 (8W-15-7)
BRAKE PRESSURE SENSOR NO. 2
BRAKE PRESSURE SENSOR NO. 1

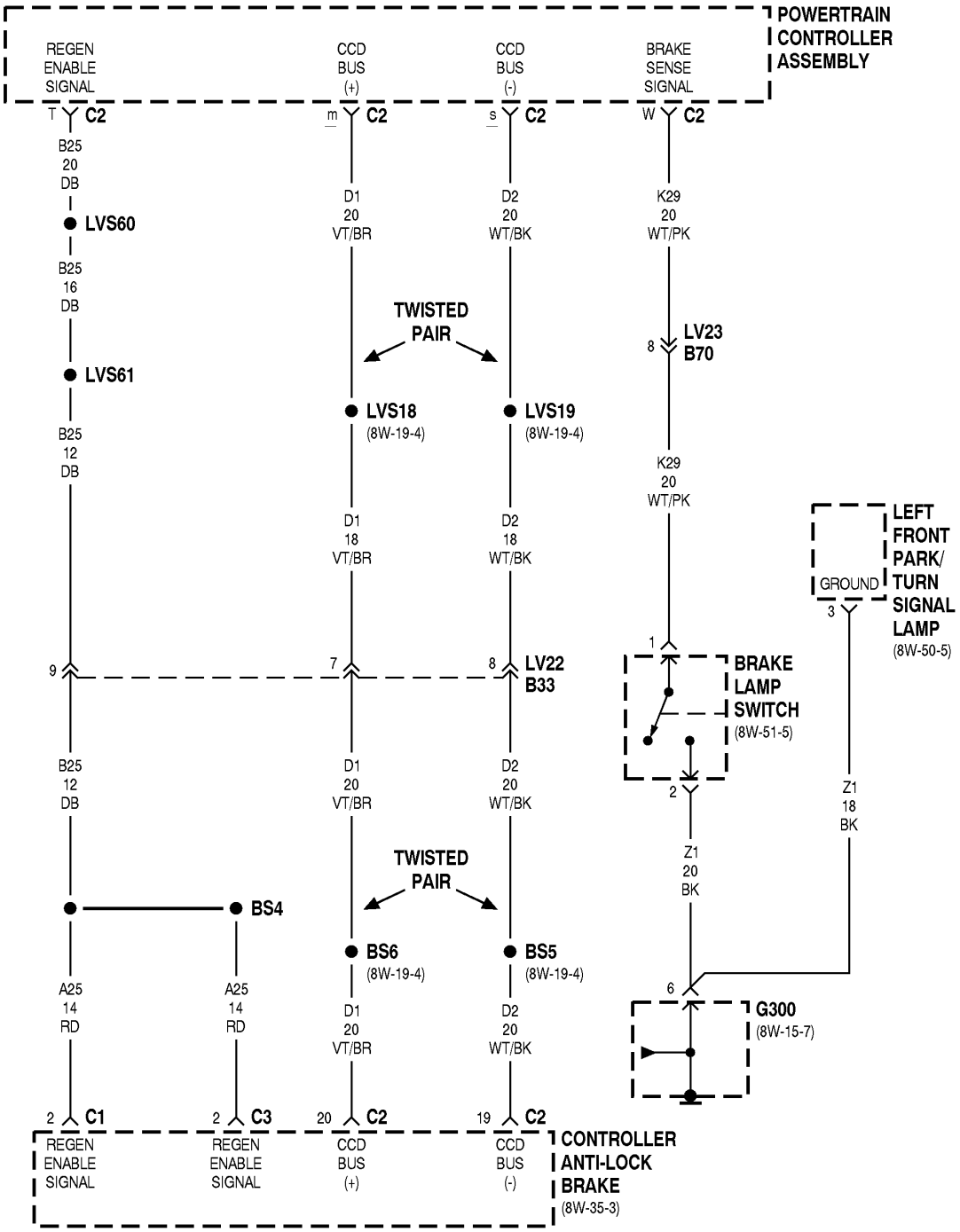
POWERTRAIN CONTROLLER ASSEMBLY
REGEN ENABLE SIGNAL
CCD BUS (+)
CCD BUS (-)
BRAKE SENSE SIGNAL
T C2
m C2
s C2
W C2
B25 20 DB
D1 20 VT/BR
D2 20 WT/BK
K29 20 WT/PK
LVS60
B25 16 DB
TWISTED PAIR
8 LV23 B70
LVS61
LVS18 (8W-19-4)
LVS19 (8W-19-4)
B25 12 DB
K29 20 WT/PK
D1 18 VT/BR
D2 18 WT/BK
LEFT FRONT PARK/ TURN SIGNAL LAMP (8W-50-5)
GROUND
3
1
9
7
8 LV22 B33
BRAKE LAMP SWITCH (8W-51-5)
B25 12 DB
D1 20 VT/BR
D2 20 WT/BK
2
Z1 18 BK
TWISTED PAIR
Z1 20 BK
BS4
BS6 (8W-19-4)
BS5 (8W-19-4)
6
A25 14 RD
A25 14 RD
D1 20 VT/BR
D2 20 WT/BK
G300 (8W-15-7)
2 C1
2 C3
20 C2
19 C2
REGEN ENABLE SIGNAL
REGEN ENABLE SIGNAL
CCD BUS (+)
CCD BUS (-)
CONTROLLER ANTI-LOCK BRAKE (8W-35-3)

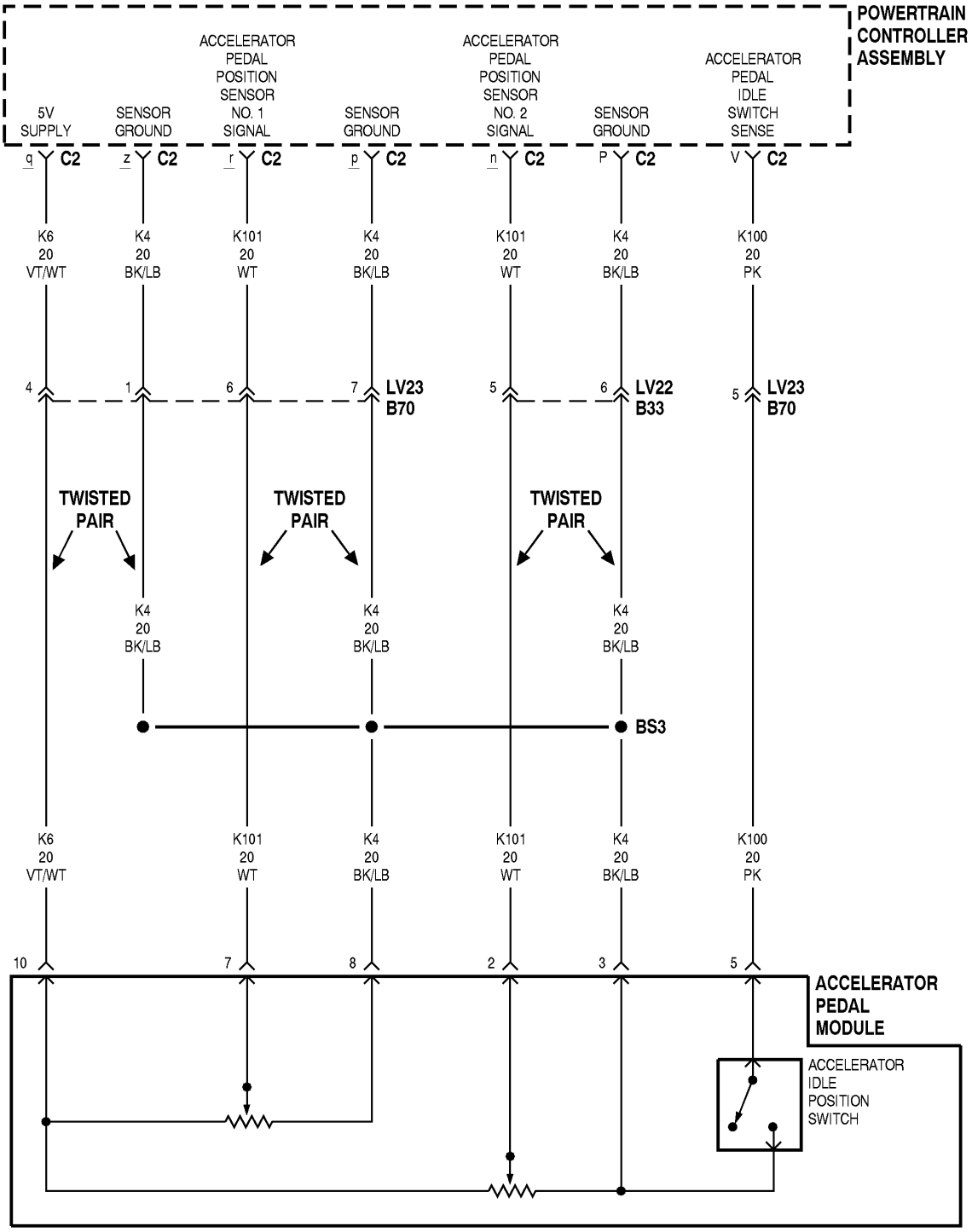
POWERTRAIN CONTROLLER ASSEMBLY
5V SUPPLY
SENSOR GROUND
ACCELERATOR PEDAL POSITION SENSOR NO. 1 SIGNAL
SENSOR GROUND
ACCELERATOR PEDAL POSITION SENSOR NO. 2 SIGNAL
SENSOR GROUND
ACCELERATOR PEDAL IDLE SWITCH SENSE
q C2
z C2
r C2
p C2
n C2
P C2
V C2
K6 20 VT/WT
K4 20 BK/LB
K101 20 WT
K4 20 BK/LB
K101 20 WT
K4 20 BK/LB
K100 20 PK
4
1
6
7
LV23 B70
5
6
LV22 B33
5
LV23 B70
TWISTED PAIR
TWISTED PAIR
TWISTED PAIR
K4 20 BK/LB
K4 20 BK/LB
K4 20 BK/LB
BS3
K6 20 VT/WT
K101 20 WT
K4 20 BK/LB
K101 20 WT
K4 20 BK/LB
K100 20 PK
10
7
8
2
3
5
ACCELERATOR PEDAL MODULE
ACCELERATOR IDLE POSITION SWITCH

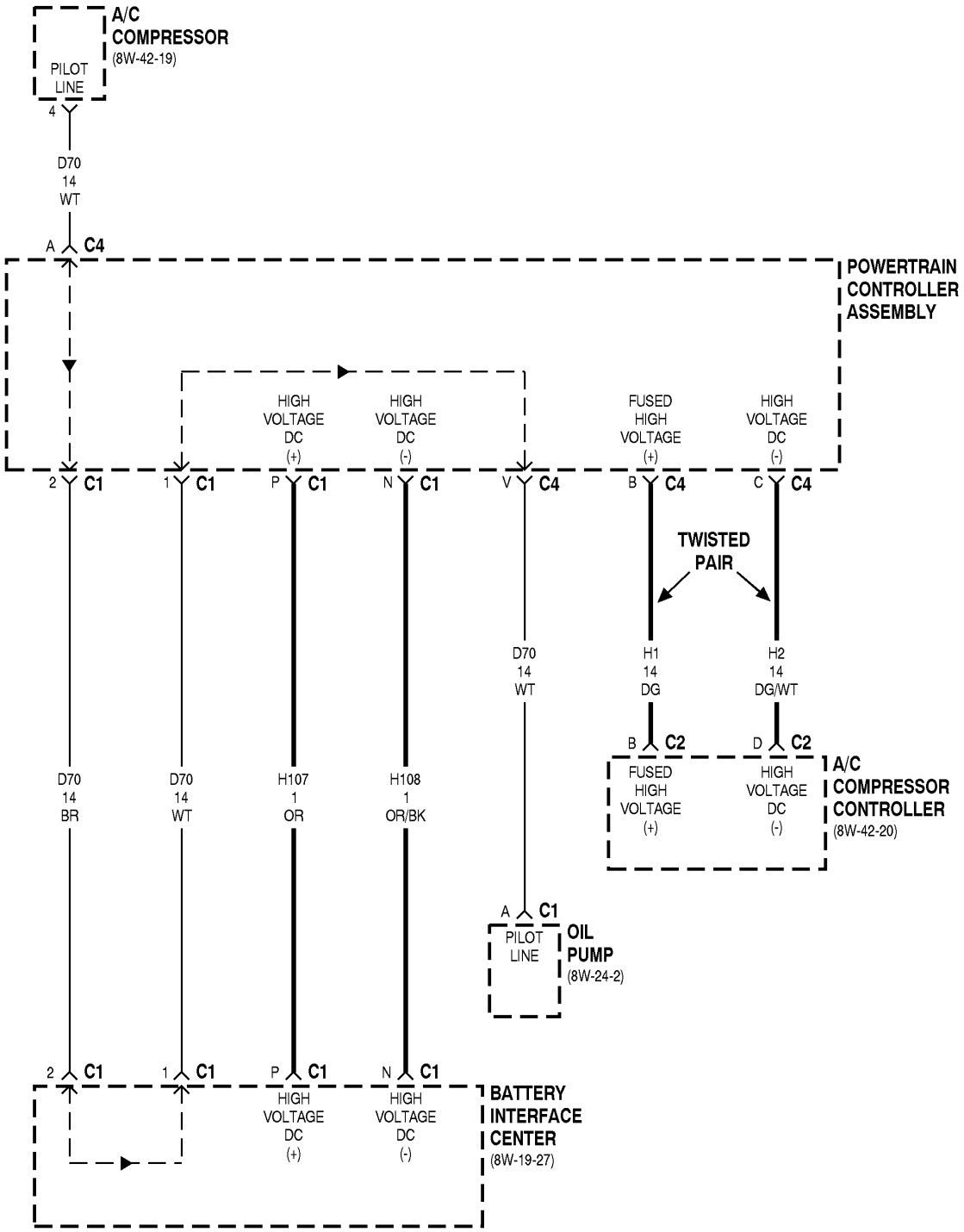
A/C
COMPRESSOR
(8W-42-19)
PILOT
LINE
4
D70
14
WT
A C4
POWERTRAIN
CONTROLLER
ASSEMBLY
HIGH
VOLTAGE
DC
(+)
HIGH
VOLTAGE
DC
(-)
FUSED
HIGH
VOLTAGE
(+)
HIGH
VOLTAGE
DC
(-)
2 C1
1 C1
P C1
N C1
V C4
B C4
C C4
TWISTED
PAIR
D70
14
WT
H1
14
DG
H2
14
DG/WT
B C2
D C2
FUSED
HIGH
VOLTAGE
(+)
HIGH
VOLTAGE
DC
(-)
A/C
COMPRESSOR
CONTROLLER
(8W-42-20)
D70
14
BR
D70
14
WT
H107
1
OR
H108
1
OR/BK
A C1
PILOT
LINE
OIL
PUMP
(8W-24-2)
2 C1
1 C1
P C1
N C1
HIGH
VOLTAGE
DC
(+)
HIGH
VOLTAGE
DC
(-)
BATTERY
INTERFACE
CENTER
(8W-19-27)

THIS PAGE INTENTIONALLY LEFT BLANK

TRACTION MOTOR 9B

TABLE OF CONTENTS

	PAGE
DESCRIPTION	**1**
OPERATION	**1**
STANDARD PROCEDURES	**1**
OIL FILL PROCEDURE	1
COMPONENT SERVICE	**2**
LEFT SIDE CROSSMEMBER	2
RESOLVER	4
RIGHT SIDE CROSSMEMBER	6
RIGHT SIDE MOTOR MOUNT	7
TRACTION MOTOR	8
TRACTION MOTOR TEMPERATURE SENSOR	13
TORQUE SPECIFICATIONS	**14**

DESCRIPTION

The electric motor used in the EPIC is a three phase AC induction (brushless) motor. It draws 245 amps and turns up to 12,000 RPM and generates 75 HP (100 HP peak). The traction motor is continuously connected to the wheels through the transaxle and is cooled with a high voltage oil pump using Castrol Brayco® Micronic–881 oil as a coolant and lubricant.

OPERATION

The Chassis Vector Controller (CVC) circuit board in the Powertrain Controller Assembly (PCA) uses inputs received from the operator, such as gear selection and accelerator pedal position, and sends a signal to the gate drive board. The gate drive board controls the amount of current the power bridge supplies to the traction motor. High voltage DC from the traction battery pack is converted to three phase AC through the power bridge in the PCA.

STANDARD PROCEDURES

OIL FILL PROCEDURE

The following steps detail the oil filling procedure for the EPIC.

(1) Remove the right side splash shield.

CAUTION: If the traction motor is known to be empty of oil, DO NOT PERFORM STEP 2. Proceed to step 3.

(2) Turn the ignition key to the Start position. This will start the oil pump. Allow the pump to run for 20 to 30 seconds.

(3) Turn the ignition key to Off.

(4) Raise vehicle.

STANDARD PROCEDURES (Continued)

(5) Remove the oil level plug (Fig. 1).

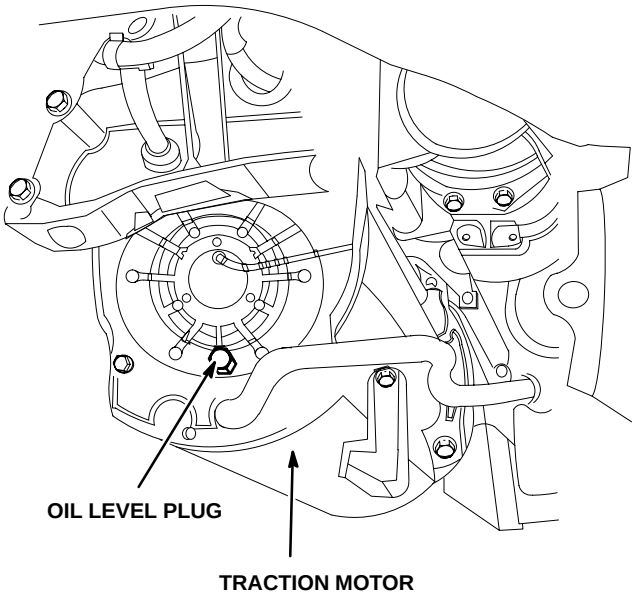

Fig. 1 Oil Level Plug

CAUTION: Use only Castrol® BR MIC 881 hydraulic oil in the traction motor.

(6) Use an oil fill pump with a 1/4 inch outside diameter hard plastic tube to fill the traction motor with oil. Crimp the end of the plastic fill tube until the fill end of the tube is in the shape of an ellipse. Insert the tube into the oil level plug hole at least 1 1/2 inches to insure the fill tube is inside the traction motor.

(7) Pump oil into traction motor.

(8) When the oil begins to run out at a steady rate, stop pumping the oil.

(9) Reinstall oil level plug.

(10) Repeat steps 2 through 8 one time. This will insure that the proper amount of oil is in the traction motor.

(11) Apply thread sealant to the oil level plug and reinstall plug. Torque to 6.2 N•m (55 in. lbs.). Wipe off excess oil from traction motor. Install right side splash shield.

COMPONENT SERVICE

LEFT SIDE CROSSMEMBER

REMOVAL

(1) Disable the traction battery pack by turning the service disconnect switch to Off.

(2) Disconnect and isolate the auxiliary battery negative cable.

(3) Remove Powertrain Controller Assembly (PCA). Refer to “PCA Removal” procedures in this manual.

(4) Remove harness ground strap from front left side crossmember (Fig. 2).

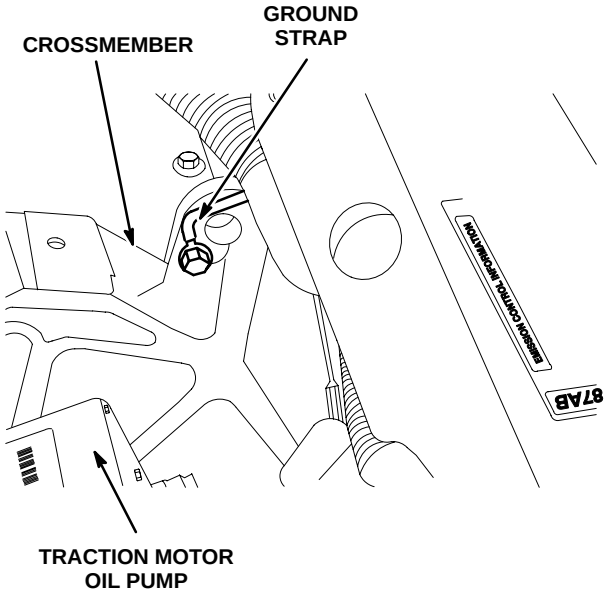

Fig. 2 Ground Strap

(5) Remove oil pump connectors (2).

LEFT SIDE CROSSMEMBER (Continued)

(6) Remove low and high voltage connectors to Power Steering Pump/Motor/Controller (PMC) (Fig. 3).

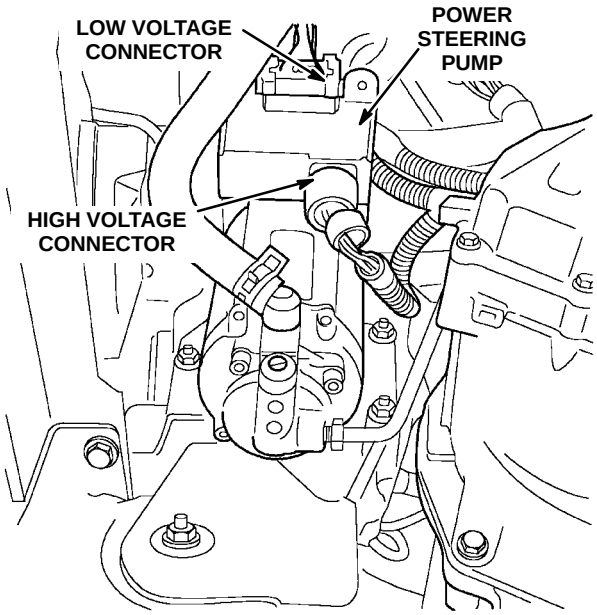

Fig. 3 PMC Connectors

(7) Remove vacuum pump/motor mounting bolts (2) (Fig. 4). Move vacuum pump/motor assembly off to the side.

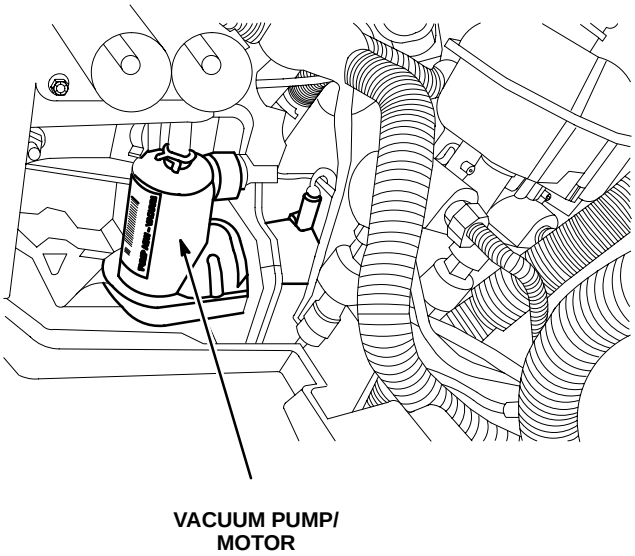

Fig. 4 Vacuum Pump/Motor

(8) Raise vehicle.

(9) Remove PMC mounting nuts and washers (3). Support PMC so that it is not supported by the power steering lines.

(10) Remove oil pressure switch connector (Fig. 5).

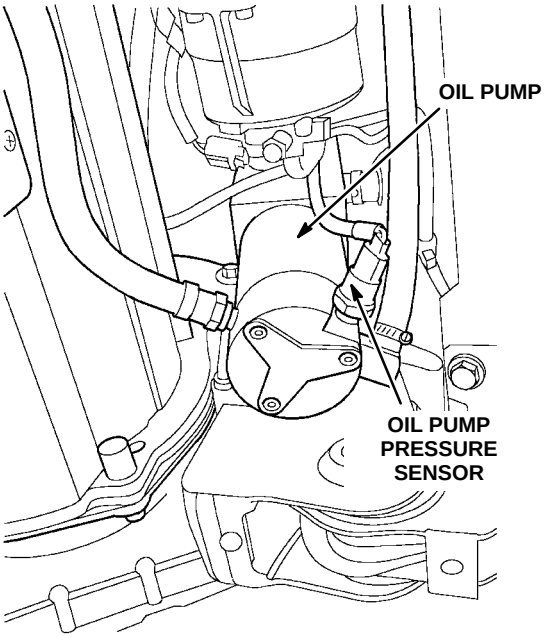

Fig. 5 Oil Pump Pressure Sensor

(11) Remove oil pump mounting bolts (4). Support oil pump so that it is not supported by the oil lines.

(12) Remove front lower traction motor mount bolt (Fig. 6).

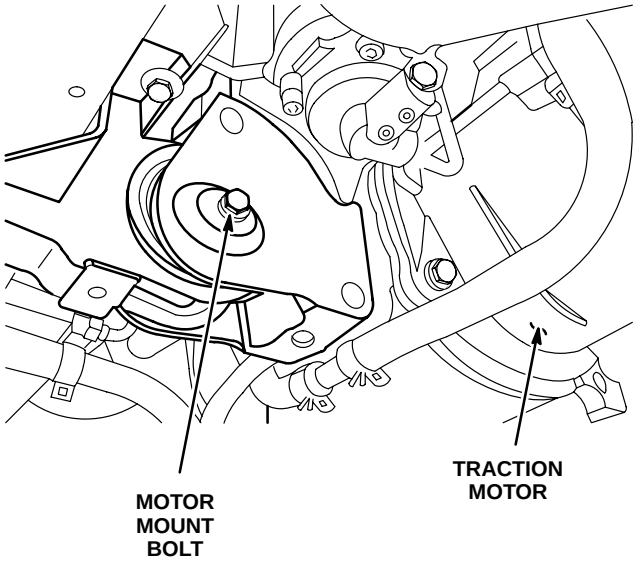

Fig. 6 Front Lower Traction Motor Mount

(13) Lower vehicle.

(14) Remove wiring harness brackets from rear of crossmember.

LEFT SIDE CROSSMEMBER (Continued)

(15) Remove crossmember to rear traction motor mount bolt (Fig. 7).

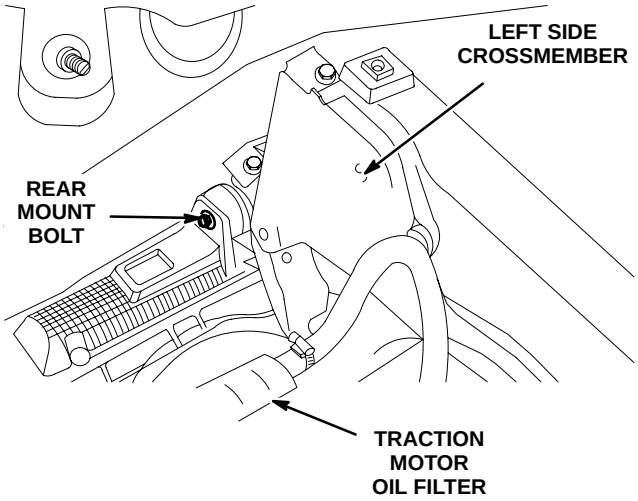

Fig. 7 Crossmember to Rear Traction Motor Mount Bolt

(16) Remove traction motor to crossmember connecting brackets (2) and bolts (4) (Fig. 8).

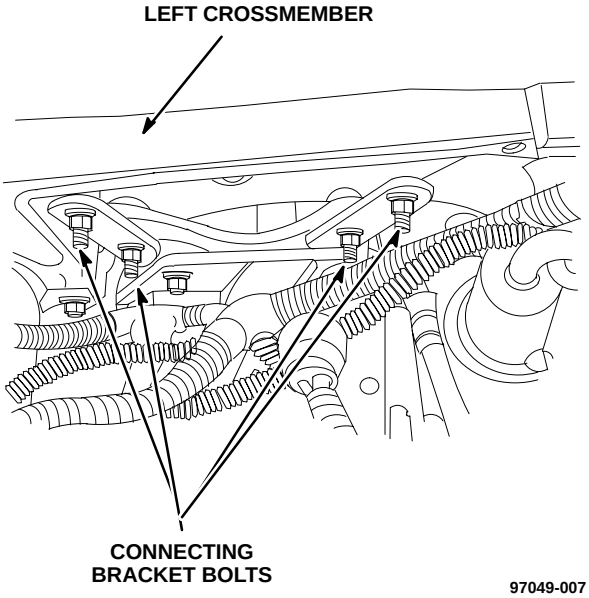

Fig. 8 Connecting Bracket Bolts

(17) Remove oil filter hose at traction motor.
(18) Remove left side crossmember.

INSTALLATION

(1) Install left side crossmember.
(2) Install traction motor to connecting brackets (2) and bolts (4). Leave finger tight.
(3) Install crossmember to rear traction motor mount bolt. Leave finger tight.
(4) Torque traction motor to crossmember connecting bolts to 61 N•m (45 ft. lb.).
(5) Torque crossmember to rear traction motor mount bolt to 108 N•m (80 ft. lb.).
(6) Raise vehicle.
(7) Install front lower traction motor mount bolt. Torque to 54 N•m (40 ft. lb.).
(8) Install oil pump. Torque to 31 N•m (23 ft. lb.).
(9) Install oil pump connectors.
(10) Install PMC. Torque nuts (3) to 31 N•m (23 ft. lb.).
(11) Install vacuum pump/motor assembly bolts (2). Torque to 31 N•m (23 ft. lb.).
(12) Install low and high voltage connectors to PMC.
(13) Install oil pump connectors.
(14) Attach harness ground strap to left side crossmember.
(15) Install PCA. Refer to “PCA Installation” procedures in this manual.
(16) Connect the auxiliary battery negative cable.
(17) Enable the traction battery pack by turning the service disconnect switch to On.

RESOLVER

DESCRIPTION

The resolver provides traction motor rotational location feedback to the PCA.

REMOVAL

(1) Disable the traction battery pack by turning the high voltage service disconnect switch to Off.
(2) Disconnect and isolate the auxiliary battery negative cable.
(3) Remove cover to Power Distribution Box on the Powertrain (PCA).
(4) Remove bolts (12) attaching PCA cover to PCA.

RESOLVER (Continued)

(5) Disconnect PCA C1 high voltage connector (Fig. 9).

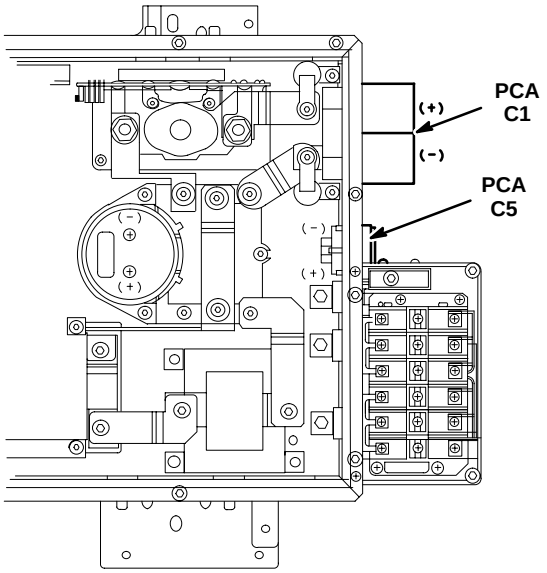

Fig. 9 PCA Connectors

(6) Disconnect PCA C5 low voltage connector.

(7) Disconnect phase wires (3) and mark position (Fig. 10).

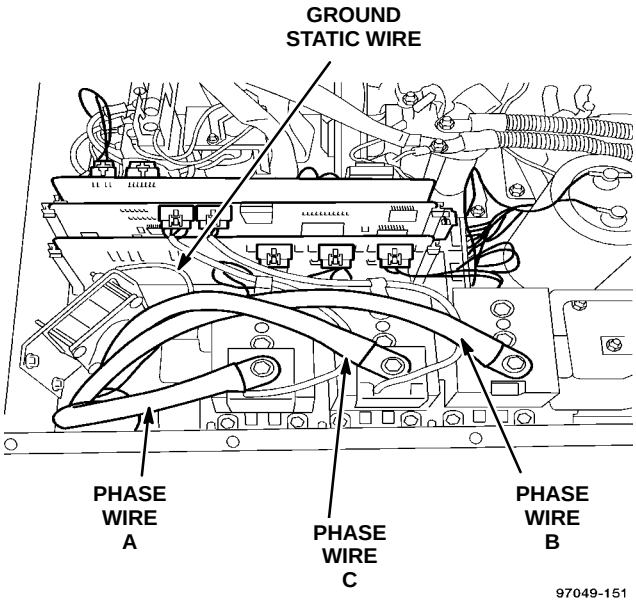

Fig. 10 Phase Wires

(8) Remove PCA ground static wire from PCA cooling fan.

(9) Remove PCA attaching bolts (4).

(10) Disconnect coolant line on PCA right side.

(11) Raise PCA to disconnect resolver connector (Fig. 11).

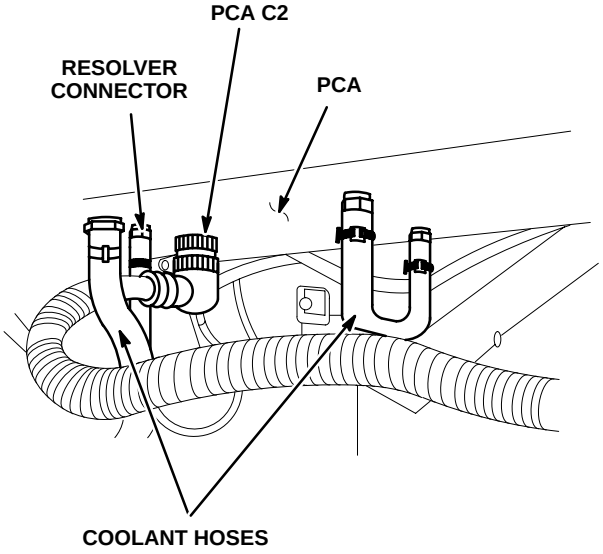

Fig. 11 Resolver Connector

(12) Raise vehicle on hoist.

(13) Remove resolver stator screws (3) (Fig. 12).

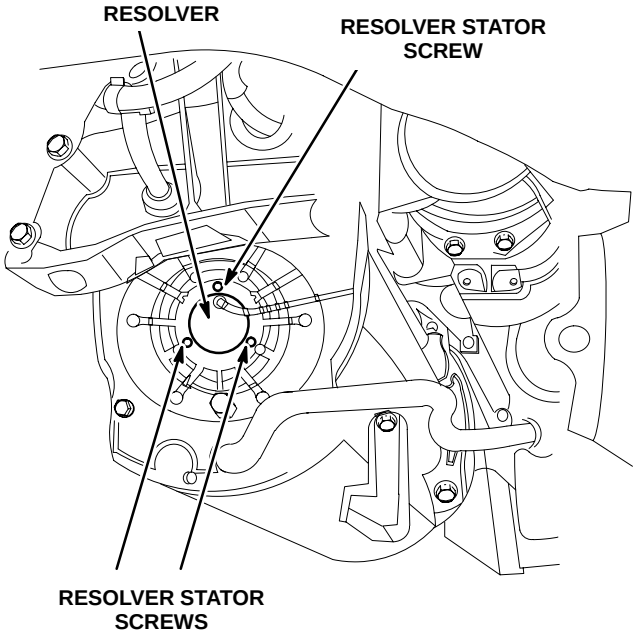

Fig. 12 Resolver

(14) Remove resolver stator.

(15) Remove center rotor screw.

(16) Use a heat gun to soften locktite on rotor.

(17) Remove resolver rotor.

RESOLVER (Continued)

CAUTION: Do not pry on the resolver rotor. If rotor cannot be removed easily, heat the rotor with a heat gun to remove.

INSTALLATION

NOTE: Resolver rotor and Stator are a matched set and should be replaced as one unit.

(1) Install resolver rotor.
(2) Apply locktite to center screw. Tighten to 5 N•m (44 in. lbs.) torque.
(3) Install resolver cover. Tighten to 2 N•m (18 in. lbs.) torque.
(4) Lower vehicle.
(5) Raise PCA and connect resolver connector.
(6) Install PCA attaching bolts (4). Tighten to 31N•m (23 ft. lbs.) torque.
(7) Connect coolant line on PCA right side.
(8) Install PCA ground static wire to PCA cooling fan.
(9) Connect phase wires (3). Torque to 8 N•m (71 in. lbs.).
(10) Connect PCA left side wire connector.
(11) Install bolts (12) attaching PCA cover to PCA. Tighten to 2 N•m (18 in. lbs.) torque.
(12) Install cover to Power Distribution Box on PCA.
(13) Connect the auxiliary battery negative cable.
(14) Enable the traction battery pack by turning the high voltage service disconnect switch to On.

RIGHT SIDE CROSSMEMBER

REMOVAL

(1) Disable the traction battery pack by turning the service disconnect switch to Off.
(2) Disconnect and isolate the auxiliary battery negative cable.
(3) Remove Powertrain Controller Assembly (PCA). Refer to “PCA Removal” procedures in this manual.
(4) Remove side and top bolts in Right Side traction motor mounts (Fig. 13).

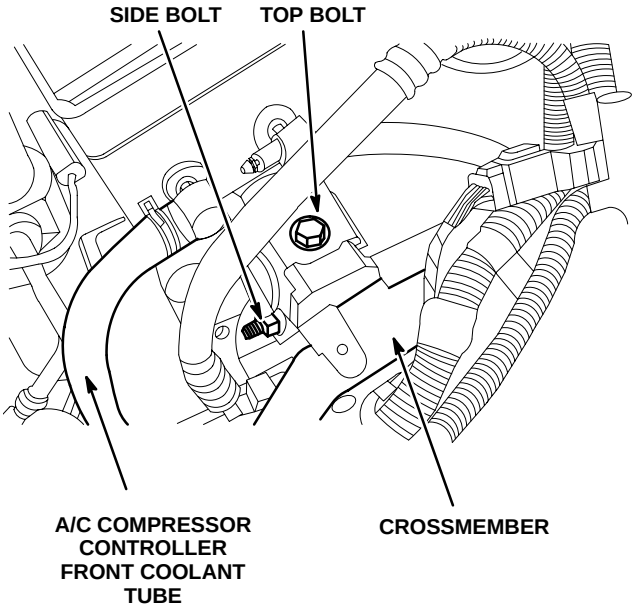

Fig. 13 Right Crossmember

(5) Remove upper A/C compressor mounting bolt (Fig. X) Pinch off front A/C compressor controller coolant hose.
(6) Raise vehicle.
(7) Remove right side splash shield.
(8) Remove lower A/C compressor mounting bolt (Fig. 14).

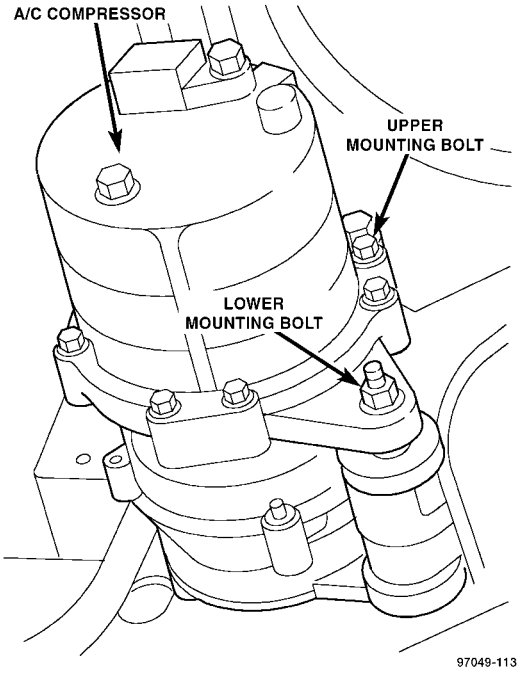

Fig. 14 Lower A/C Compressor Mounting Bolt

RIGHT SIDE CROSSMEMBER (Continued)

(9) Remove A/C compressor from mounts. Move the compressor off to the side and support compressor.

(10) Pull down oil vent tube.

(11) Remove coolant hose from heat exchanger at the tube mounted to the right crossmember (Fig. 15)

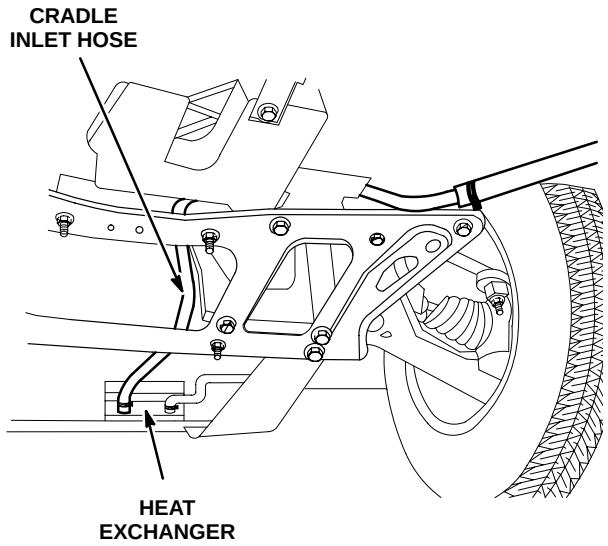

Fig. 15 Heat Exchanger

(12) Remove traction motor to right crossmember support bolts (2) (Fig. 16).

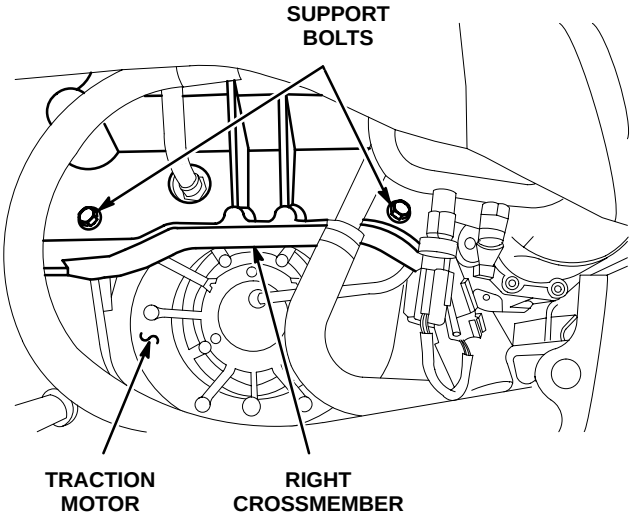

Fig. 16 Right Crossmember Support Bolts

(13) Remove right crossmember.

INSTALLATION

(1) Install right crossmember. Feed oil vent tube through crossmember.

(2) Install traction motor to right crossmember support bolts (2). Torque to 61 N•m (45 ft. lb.).

(3) Install right side splash shield.

(4) Lower vehicle.

(5) Install side and top bolts in Right Side Motor Mounts. Torque horizontal bolts and nuts to 149 N•m (110 ft. lb.). Torque vertical bolts to 101 N•m (75 ft. lb.).

(6) Install upper A/C compressor mounting bolt. Torque to 28 N•m (21 ft. lb.).

(7) Raise vehicle.

(8) Install lower A/C compressor mounting bolt.

(9) Lower vehicle.

(10) Install PCA. Refer to “PCA Installation” procedures in this manual.

(11) Connect auxiliary battery negative cable.

(12) Enable the traction battery pack by turning the service disconnect switch to On.

RIGHT SIDE MOTOR MOUNT

REMOVAL

(1) Disable the traction battery pack by turning the service disconnect switch to Off.

(2) Disconnect and isolate the auxiliary battery negative cable.

(3) Remove A/C compressor controller. Refer to “A/C Compressor Controller Removal” procedures in this manual.

(4) Disconnect filter/dryer from A/C compressor controller bracket (Fig. 17).

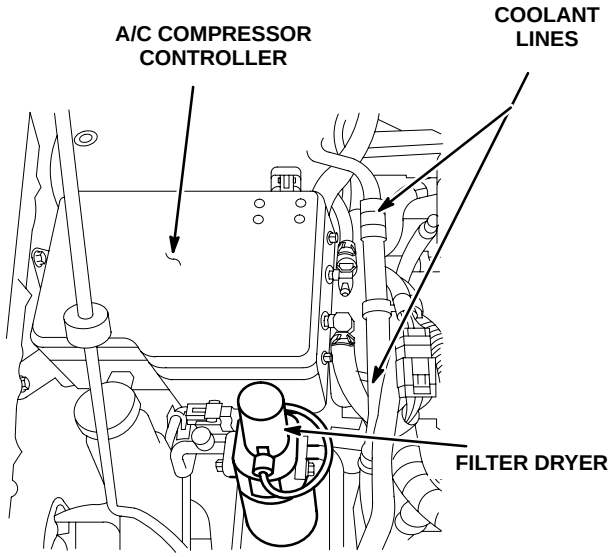

Fig. 17 Filter/Dryer

(5) Remove A/C compressor controller bracket.

RIGHT SIDE MOTOR MOUNT (Continued)

(6) Support traction motor from underneath vehicle.
(7) Remove ground strap on mount.
(8) Remove mount to frame rail bolts (3) (Fig. 18).

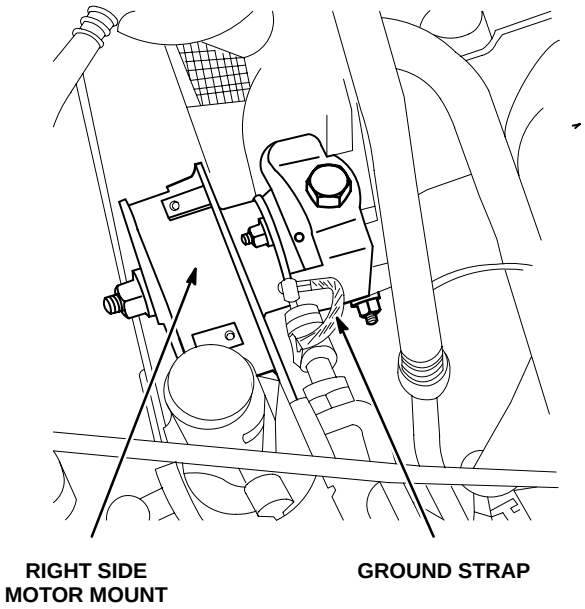

Fig. 18 Mount to Frame Rail Bolts

(9) Remove mount to crossmember bolts (2) (Fig. 19).

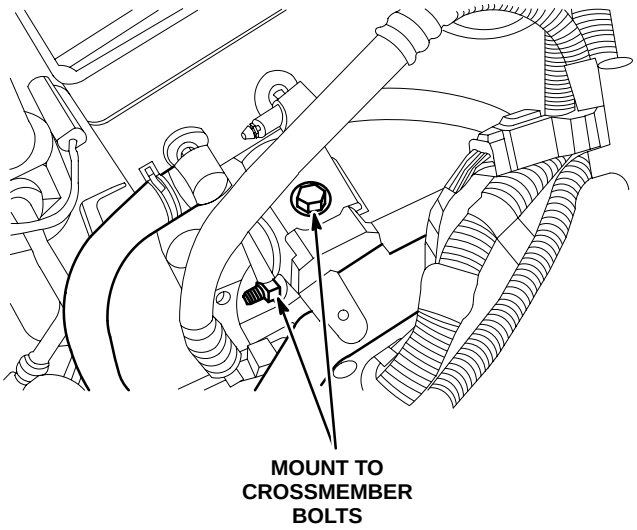

Fig. 19 Right Motor Mount Vertical Fasteners

(10) Remove right side motor mount.

INSTALLATION

(1) Install right side motor mount. Torque to 68 N•m (50 ft. lb.).
(2) Install the two right motor mount insulator vertical fasteners. Torque to 102 N•m (75 ft. lb.).
(3) Install the horizontal fastener. Torque to 150 N•m (111 ft. lb.).
(4) Install A/C compressor controller bracket. Torque to 6 N•m (53 in. lb.).
(5) Connect filter/dryer to A/C compressor controller bracket. Torque to 8 N•m (71 in. lb.).
(6) Install A/C compressor controller. Refer to “A/C Compressor Installation” procedures in this manual.
(7) Connect auxiliary battery negative cable.
(8) Enable the traction battery pack by turning the service disconnect switch to On.

TRACTION MOTOR

DESCRIPTION

The traction motor is a three phase Alternating Current (AC) induction motor. The motor uses Castrol® BR MIC 881 hydraulic oil as a coolant and lubricant. It provides power to the EPIC via the transaxle and is continuously engaged to the wheels.

REMOVAL

(1) Disable the traction battery pack by turning the service disconnect switch to Off.
(2) Disconnect and isolate the auxiliary battery negative cable.
(3) Remove Powertrain Controller Assembly (PCA). Refer to “PCA Removal” procedure in this section.
(4) Disconnect traction motor oil pressure sensor connector (Fig. 20).

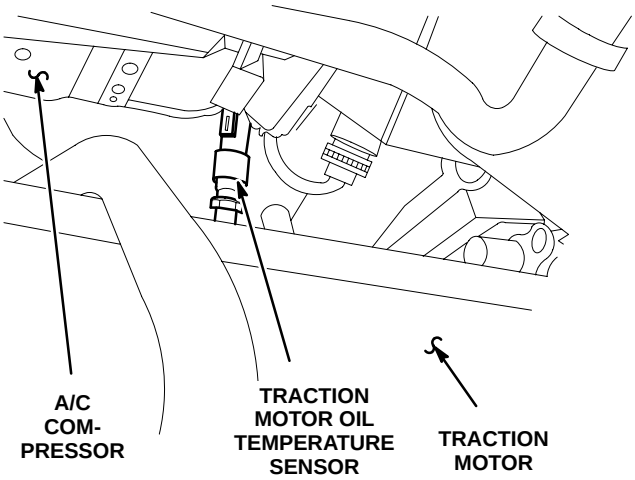

Fig. 20 Traction Motor Oil Pressure Sensor

TRACTION MOTOR (Continued)

(5) Disconnect oil hose between oil filter and cooler at the oil filter.
(6) Remove shift linkage.
(7) Disconnect Transmission Range Sensor connector (Fig. 21).

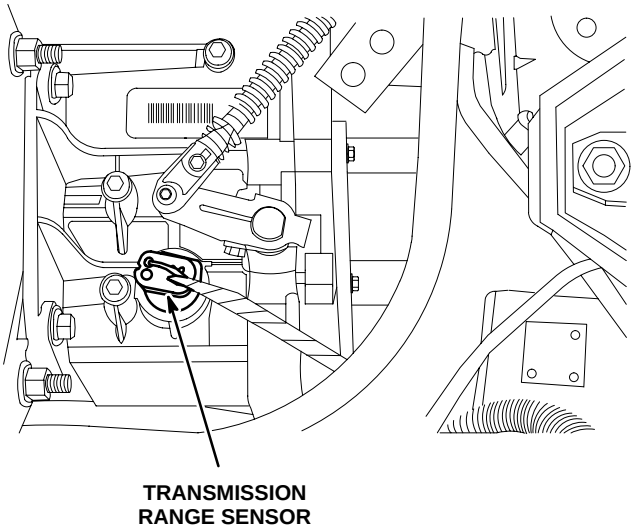

Fig. 21 Transmission Range Sensor

(8) Disconnect vacuum pump/motor assembly connectors (2) (Fig. 22).

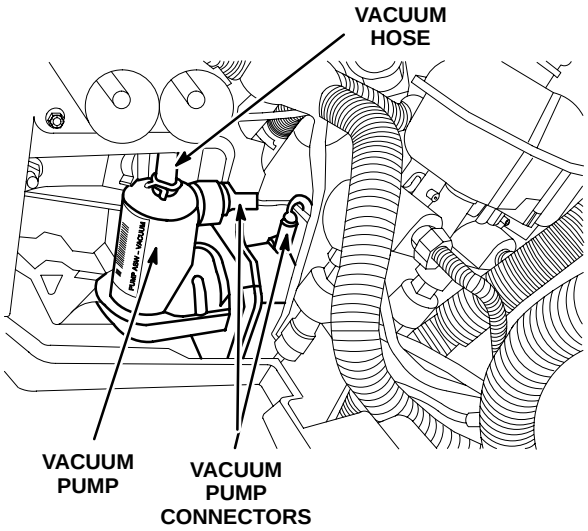

Fig. 22 Vacuum Pump/Motor

(9) Remove lower and upper bolts (2) from vacuum pump/motor assembly mounting bracket.
(10) Remove vacuum hose at brake power booster.
(11) Remove vacuum pump/motor assembly (Fig. 1).
(12) Raise vehicle on hoist.
(13) Remove front wheels.
(14) Remove right splash shield.
(15) Remove left fender liner.
(16) Drain transaxle oil.
(17) Remove axle shaft cotter pins and nuts (Fig. 23).

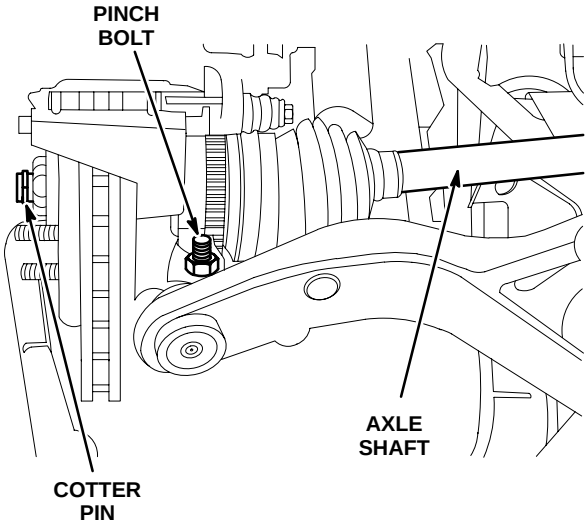

Fig. 23 Axle Shaft

(18) Remove pinch bolts and axle shafts.
(19) Remove battery coolant pump. Refer to “Battery Coolant Pump” removal procedures in this manual.
(20) Pinch off rubber battery cooling hoses at both ends of cradle outlet tube (fig. 24).

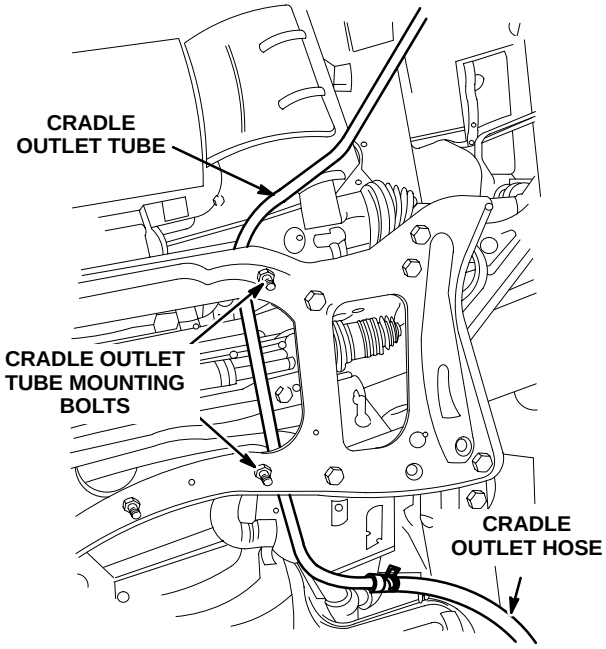

Fig. 24 Cradle Outlet Tube

(21) Remove cradle outlet tube.

TRACTION MOTOR (Continued)

(22) Set up lifting device and position under transaxle.

(23) Remove rear mount upper bolts (3) (Fig. 25).

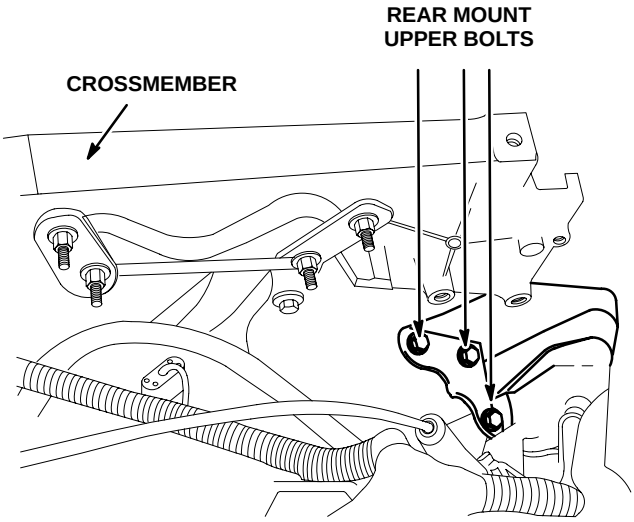

Fig. 25 Rear Mount Upper Bolts

(24) Remove rear mount lower bolt to transaxle (1) (Fig. 26).

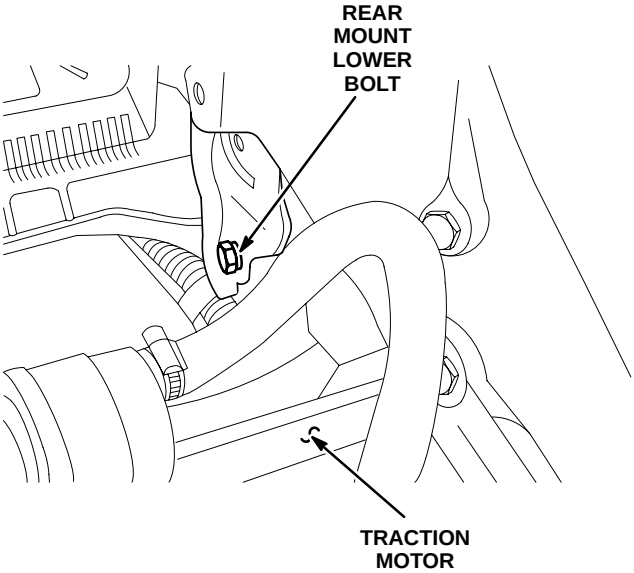

Fig. 26 Rear Mount Lower Bolt

(25) Remove lower rear bell housing bolt on motor side (Fig. 27).

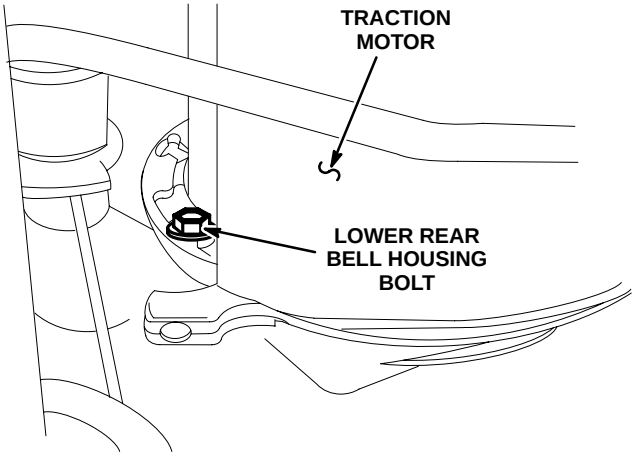

Fig. 27 Lower Rear Bell Housing Bolt

(26) Remove frame to left mount bolt (Fig. 28).

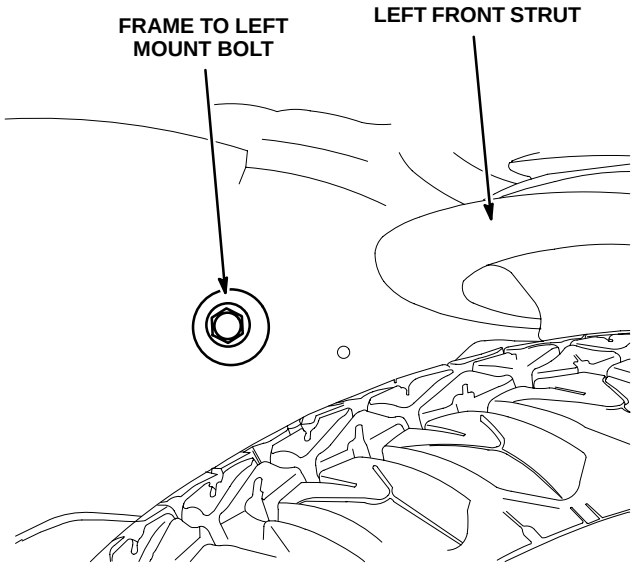

Fig. 28 Frame to Left Mount Bolt

TRACTION MOTOR (Continued)

(27) Remove left mount to transaxle bolts (3) and remove left mount (Fig. 29).

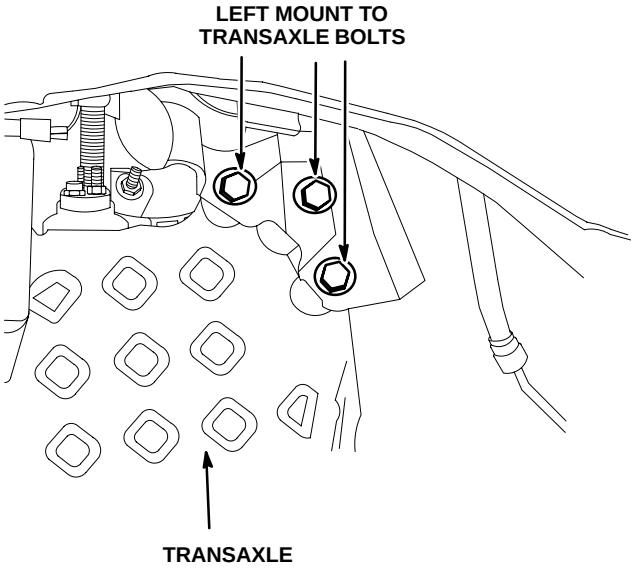

Fig. 29 Left Mount

(28) Remove upper bell housing bolts (2) and front lower bell housing bolt.

(29) Separate transaxle from motor, back out and rotate differential down to clear mounts and complete removal.

(30) Drain motor oil.

(31) Remove oil pump to traction motor oil hose.

(32) Remove vent hose and fitting attached to motor.

(33) Pinch hoses at both ends of cradle inlet tube (fig. 30).

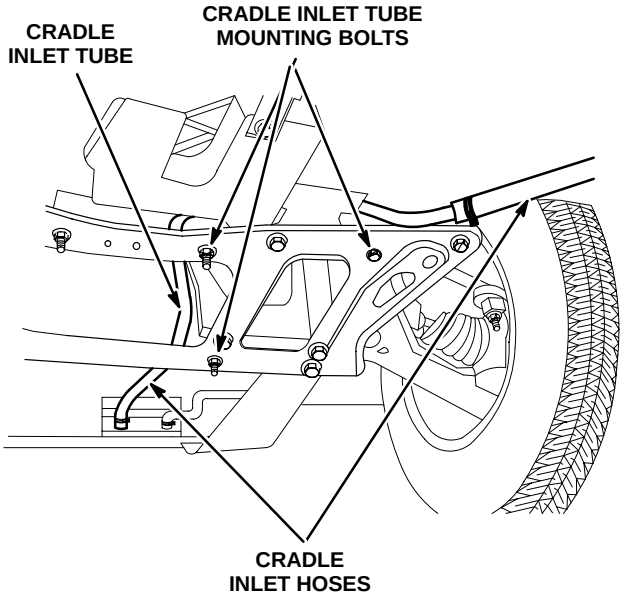

Fig. 30 Cradle Inlet Tube

(34) Remove cradle inlet tube.

(35) Setup OTC powertrain lift and position under motor. Chain motor to lift.

(36) Remove right crossmember support bolts (Fig. 31).

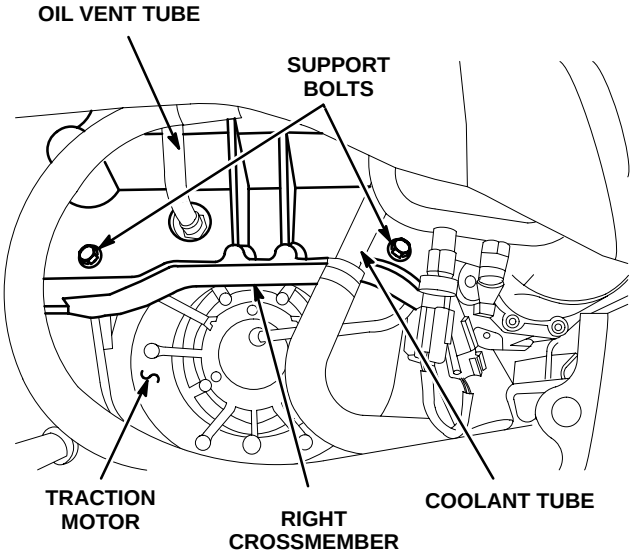

Fig. 31 Right Crossmember Support Bolts

(37) Remove connecting bracket bolts (4) and brackets (2) on left side of motor (Fig. 32).

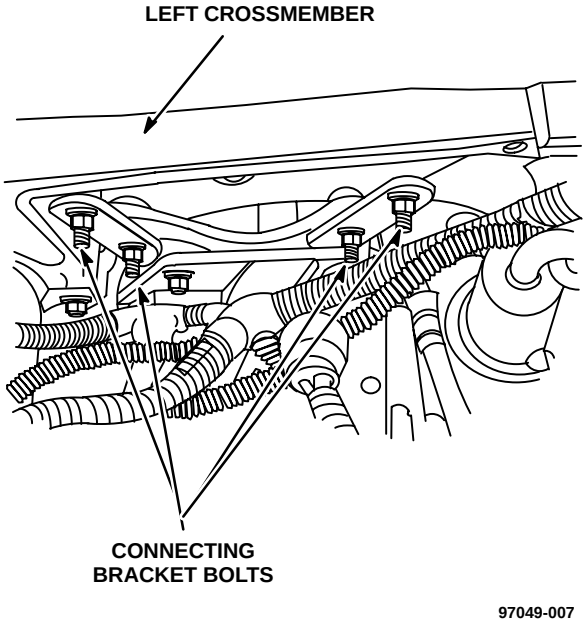

Fig. 32 Connecting Bracket Bolts

TRACTION MOTOR (Continued)

(38) Remove motor.

NOTE: When removing motor, check that resolver cable does not get caught.

(39) Remove oil fittings.

INSTALLATION

NOTE: New motor comes with resolver assembly.

(1) Install oil fittings, except for fill tube fitting.
(2) Secure motor on lifting device.
(3) Raise motor.
(4) Install plate bolts (4) and brackets (2) on left side of motor. Tighten to 61 N•m (45 ft. lbs.) torque.
(5) Install right motor end plate to brace bolts. Tighten to 61 N•m (45 ft. lbs.) torque.
(6) Secure transaxle on lifting device.
(7) Raise transaxle.
(8) Connect transaxle to motor.
(9) Install transaxle side bell housing bolts (3) and motor side bell housing bolt. Torque to 95 N•m (70 ft. lbs.).
(10) Install left mount to transaxle.
(11) Install rear mount lower bolt to transaxle on traction motor side.
(12) Place transaxle in Park.
(13) Install fill hose fitting and fill hose.
(14) Install oil pump to traction motor oil hose.
(15) Install axle shafts and pinch bolts.
(16) Install axle nuts and pins.
(17) Install battery coolant pump. Refer to “Battery Coolant Pump Installation” procedure in this Manual.
(18) Install cradle outlet line.
(19) Install cradle inlet line.
(20) Install wheels.
(21) Install right splash shield.
(22) Install left splash shield.
(23) Remove supports and lower vehicle.
(24) Connect Transaxle Range Sensor connector.
(25) Install shift linkage. Adjust as necessary.
(26) Install upper rear mount bolts (4). Tighten to 108 N•m (80 ft. lbs.) torque.
(27) Install vacuum pump.
(28) Connect vacuum pump connectors and hose.
(29) Install PCA.
(30) Connect connectors (2) and install coolant line under PCA.
(31) Connect Power Distribution Box connector.
(32) Install PCA attaching bolts (4). Tighten to 31 N•m (23 ft. lbs.) torque.
(33) Connect coolant line on PCA right side.
(34) Install PCA ground static wire to PCA cooling fan.
(35) Connect phase wires (3). Torque to 8 N•m (72 in. lbs.).
(36) Connect PCA left side wire connector.
(37) Install bolts (12) attaching PCA cover to PCA. Tighten to 2 N•m (18 in. lbs.) torque.
(38) Install cover to Power Distribution Box on PCA.
(39) Fill traction motor oil. Refer to “Traction Motor Oil Fill” procedure in this section.
(40) Fill transaxle oil. Refer to ”Transaxle Fluid Fill Procedure” located in the NS Service Manual.
(41) Fill battery coolant. Refer to ”Battery Coolant Fill” procedure in this manual.
(42) Connect the auxiliary battery negative cable.
(43) Enable the traction battery pack by turning the high voltage service disconnect switch to On.

TRACTION MOTOR TEMPERATURE SENSOR

REMOVAL

(1) Disable the traction battery pack by turning the service disconnect switch to Off.
(2) Disconnect and isolate the auxiliary battery negative cable.
(3) Raise vehicle
(4) Disconnect traction motor temperature sensor connector.
(5) Remove traction motor temperature sensor (Fig. 33).

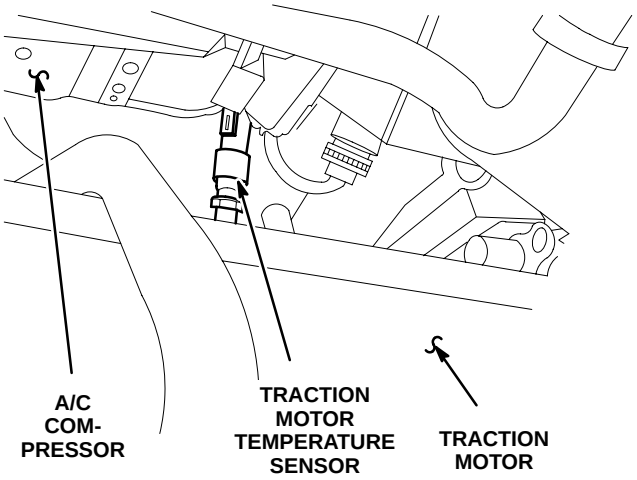

Fig. 33 Traction Motor Oil Pressure Sensor

INSTALLATION

(1) Install traction motor temperature sensor. Tighten to 3 N•m (27 in. lbs.) torque.
(2) Install traction motor temperature sensor connector.
(3) Lower vehicle
(4) Connect the auxiliary battery negative cable.
(5) Enable the traction battery pack by turning the high voltage service disconnect switch to On.

TORQUE SPECIFICATIONS

DESCRIPTION	TORQUE
A/C Compressor	28 N•m (21 ft. lbs.)
Battery Coolant Pump Mounting Bolts	12 N•m (105 in. lbs.)
Bell Housing	95 N•m (70 ft. lbs.)
Connecting Bracket Plate	61 N•m (45 ft. lbs.)
Cross Member to Rear Motor Mount	108 N•m (80 ft. lbs.)
Front Lower Motor Mount	54 N•m (40 ft. lbs.)
Horizontal Motor Mount	150 N•m (111 ft. lbs.)
Left Side Crossmember to Traction Motor	61 N•m (45 ft. lbs.)
Oil Pump	31 N•m (23 ft. lbs.)
PCA Mounting Bolts	31 N•m (23 ft. lbs.)
Phase Wire to Current Sensor	8 N•m (71 in. lbs.)
PMC Mounting Nuts	31 N•m (23 ft. lbs.)
Resolver Center Screw	5 N•m (44 in. lbs.)
Resolver Cover	2 N•m (18 in. lbs.)
Right Motor to End Plate Brace	61 N•m (45 ft. lbs.)
Right Side Crossmember	61 N•m (45 ft. lbs.)
Traction Motor Oil Level Plug	6 N•m (53 in. lbs.)
Traction Motor Temperature Sensor	3 N•m (27 in. lbs.)
Upper Rear Mount	108 N•m (80 ft. lbs.)
Vacuum Pump	31 N•m (23 ft. lbs.)
Vertical Motor Mount Insulator Bolts	102 N•m (75 ft. lbs.)

STEERING

TABLE OF CONTENTS

	PAGE
DESCRIPTION	**2**
OPERATION	**2**
DIAGNOSIS AND TESTING	**3**
PRE–DIAGNOSTIC CHECKOUT	4
NO POWER ASSIST	5
NO RESPONSE FROM POWER STEERING	6
VERIFICATION TEST – VER1A	7
POWER STEERING PUMP FLOW RATE AND PRESSURE TEST	8
COMPONENT SERVICE	**9**
POWER STEERING PRESSURE LINE	9
POWER STEERING PUMP/MOTOR/ CONTROLLER (PMC)	10
POWER STEERING RETURN LINE	11
SYSTEM SPECIFICATIONS	**13**
TORQUE SPECIFICATIONS	**13**
SPECIAL TOOLS	**13**
WIRING DIAGRAMS	**14**

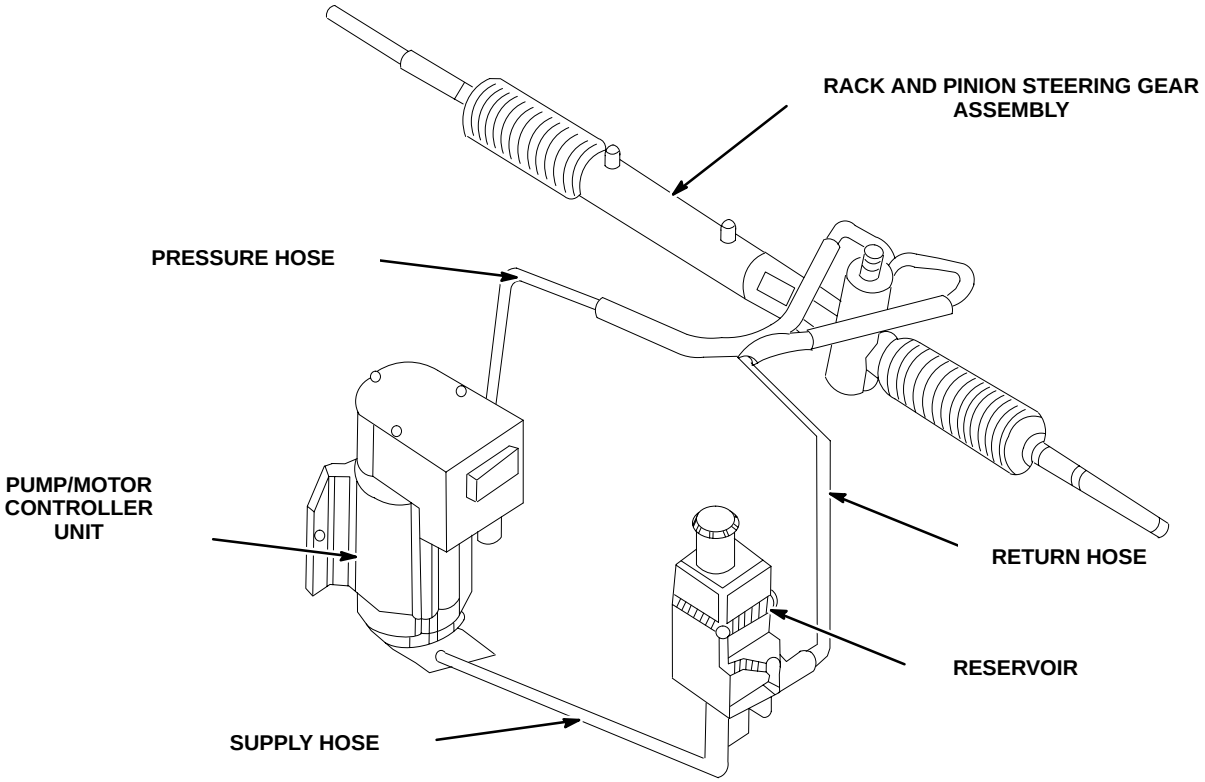

Fig. 1 Electric Powered Hydraulic System

DESCRIPTION

The EPIC uses a high voltage electric powered hydraulic steering (EPHS) system to provide hydraulic fluid to a rack and pinion steering gear (Fig. 1). When the vehicle is being operated, high voltage is supplied to the Pump/Motor/Controller (PMC).

OPERATION

Hydraulic fluid is drawn from the reservoir through the supply hose to the PMC. The PMC supplies high pressure fluid to the rack and pinion steering gear assembly through the pressure hose. The steering gear valve directs fluid through the steering gear transfer lines to the steering gear piston to generate rack force. The steering gear valve assembly also directs fluid back to the reservoir through the return hose. The fluid flow rate is 1.8 gallons per minute at park, and decreases to 0.74 gallons per minute at highway speeds.

The power steering fluid level should be inspected when other underhood service is performed. If the fluid level is low and the system is not leaking, fill with DaimlerChrysler approved power steering fluid.

DIAGNOSIS AND TESTING

WARNING: DISCONNECT THE VEHICLE BATTERY PACK AT THE SERVICE DISCONNECT SWITCH PRIOR TO INSTALLING ANY DIAGNOSTIC EQUIPMENT. RECONNECT AFTER VERIFYING SAFE CONNECTIONS ARE MADE. FAILURE TO FOLLOW THESE INSTRUCTIONS COULD RESULT IN SERIOUS PERSONAL INJURY OR DEATH.

WARNING: THIS VEHICLE CONTAINS 28 12–VOLT (NOMINAL) BATTERIES CONNECTED IN SERIES. ALWAYS DISCONNECT THE SERVICE DISCONNECT SWITCH BEFORE ATTEMPTING ANY SERVICE PROCEDURES. FAILURE TO DISCONNECT THE SERVICE DISCONNECT SWITCH WHEN SERVICING THE VEHICLE CAN LEAD TO SEVERE PERSONAL INJURY OR DEATH BY ELECTROCUTION OR COMPONENT DAMAGE.

Refer To Power Steering Section in the Wiring Diagrams book for Power Steering PMC circuit description and operation. The pump will be started after the controller determines that the vehicle has successfully powered up. This will occur when all of the following conditions are met:

(1) The PMC detects ignition voltage (greater than 9.0 volts).

(2) The PMC receives CCD Bus messages indicating the Safety Relay is energized and the system controller unit (PCA) contactor has closed.

(3) The PMC detects high voltage.

TEST 1 – PRE–DIAGNOSTIC CHECKOUT

NOTE: Ensure that the Auxiliary Battery is properly charged to perform diagnostics.

1. Connect the Scan Tool to the Data Link Connector (DLC).

2. With the Scan Tool, read and record all trouble codes from BEMS™, PCA, HVAC and Power Steering. If a “No Response” from a system is present on the scan tool, refer to the Diagnosis and Testing module in the appropriate section of this service manual.

3. With the Scan Tool, erase all trouble codes.

4. Road test vehicle or charge vehicle depending on complaint condition.

5. After road test or charge, read all trouble codes using the Scan Tool.
   a. If no trouble codes have been set, return vehicle to customer.
   . b. If there are multiple modules requesting the service required lamp, perform diagnosis on trouble codes by module in the following order:
      i. BEMS™
      ii. PCA
      iii. HVAC
      iv. Power Steering

6. If the vehicle does not start or does not charge, refer to the “Diagnosis and Testing” module in the Powertrain section of this service manual.

7. If any of the following DTC’s are still present, replace the Pump/Motor/Controller. Refer to “Pump/Motor/Controller Removal and Installation” procedures in this section. The PMC can generate the following DTC’s:

- CONTROLLER FAULT
- IGBT DRIVER IC FAULT
- MISSING MOTOR FAULT
- MOTOR CONTROLLER IC FAULT
- MOTOR CURRENT FAULT
- MOTOR FAULT
- MOTOR OVER SPEED
- MOTOR PHASE SEQUENCE ERROR
- MOTOR/CONTROLLER FAULT
- THERMISTOR FAULT

NOTE: If the Scan Tool screen is blank, perform the following:

I. Disconnect the scan tool from the data link connector (DLC).

II. Ensure that there is a good ground circuit at DLC cavity 4.

III. Ensure that there is a 12–volt supply at cavity 16. If there is not, inspect the IOD fuse in the PDC.

IV. Try a different scan tool cable.

V. Try a different scan tool.

TEST 2 – NO POWER ASSIST

STEP	ACTION	YES	NO
1	HAS STEP 1 BEEN COMPLETED?	GO TO STEP 2.	PERFORM TEST 1.
2	CHECK FLUID LEVEL. IS FLUID LEVEL OK?	GO TO STEP 4.	GO TO STEP 3.
3	FILL RESERVOIR TO FULL MARK AND CHECK FOR LEAKS. ARE THERE ANY LEAKS?	REPAIR AS NECESSARY.*	GO TO STEP 4.
4	TURN IGNITION KEY TO RUN. IS POWER STEERING PUMP RUNNING?	REFER TO POWER STEERING PUMP FLOW RATE AND PRESSURE TEST IN STANDARD NS MANUAL.	GO TO STEP 5.
5	CHECK HIGH VOLTAGE FUSE LOCATED IN POWER DISTRIBUTION BOX. IS HIGH VOLTAGE FUSE GOOD?	GO TO STEP 6.	REPLACE HIGH VOLTAGE FUSE.*
6	CHECK LOW VOLTAGE FUSE LOCATED IN POWER DISTRIBUTION CENTER. IS LOW VOLTAGE FUSE GOOD?	GO TO STEP 7.	REPLACE LOW VOLTAGE FUSE.*
7	IS “SERVICE REQUIRED” LIGHT ON?	REPLACE PMC ASSEMBLY.*	GO TO STEP 8.
8	WITH KEY OFF, DISCONNECT PCA C1 CONNECTOR UNDER PDB AND C1 CONNECTOR AT POWER STEERING PUMP/MOTOR ASSEMBLY.** CHECK FOR CONTINUITY FIRST BETWEEN PCA C1 PIN R AND POWER STEERING C1 PIN C, THEN FROM PCA C1 PIN P TO POWER STEERING C1 PIN A. **POWERTRAIN CONTROLLER ASSEMBLY -C1** CAV / COLOR / FUNCTION P / OR / POWER STEERING SUPPLY R / WT / POWER STEERING RETURN **POWER STEERING PUMP -C1** CAV / COLOR / FUNCTION A / OR / POWER STEERING SUPPLY B / BR / PILOT C / OR/WT / POWER STEERING RETURN D / WT / PILOT IS CONTINUITY PRESENT AT BOTH CIRCUITS?	GO TO STEP 9.	REPAIR AS NECESSARY.*
9	DISCONNECT POWER STEERING C2 CONNECTOR AT POWER STEERING PUMP.** WITH KEY IN RUN, CHECK FOR + 12V AT PINS 10 AND 21, AND THEN CONTINUITY TO GROUND AT PINS 11 AND 22. **POWER STEERING PUMP - C2** CAV / COLOR / FUNCTION 10 / BK/OR / FUSED IGN. (RUN) 11 / BK / GROUND 21 / DB/OR / FUSED IGN. (RUN) 22 / BK / GROUND ARE THESE CIRCUITS OK?	REPLACE PUMP/MOTOR ASSEMBLY.*	REPAIR AS REQUIRED.*

***Perform Verification TEST VER-1A. **Check connectors - Clean/repair as necessary.**

TEST 3 – NO RESPONSE FROM POWER STEERING PUMP/MOTOR/CONTROLLER (PMC)

STEP	ACTION	YES	NO
1	HAS TEST 1 BEEN COMPLETED?	GO TO STEP 2.	PERFORM TEST 1.
2	DOES POWER STEERING OPERATE NORMALLY?	GO TO STEP 3.	REFER TO POWER STEERING DIAGNOSTICS SECTION IN THIS MANUAL.
3	DISABLE TRACTION BATTERY PACK BY TURNING THE SERVICE DISCONNECT SWITCH TO OFF. REMOVE POWER STEERING LOW VOLTAGE CONNECTOR. C2** CONNECT A JUMPER WIRE BETWEEN CCD BUS (+) CKT AND GROUND. USING THE SCAN TOOL, PERFORM THE CCD BUS TEST. **POWER STEERING PUMP -C2** CAV / COLOR / FUNCTION 1 / VT/BR / CCD BUS (+) 2 / WT/BK / CCD BUS (−) 10 / BK/OR / FUSED IGN. (RUN) 11 / BK / GROUND 21 / DB/OR / FUSED IGN. (RUN) 22 / BK / GROUND 1 11 DOES THE SCAN TOOL SHOW “SHORT TO GROUND?”	GO TO STEP 4.	REPAIR THE OPEN CCD BUS (+) CIRCUIT.*
4	CONNECT THE JUMPER WIRE BETWEEN CCD BUS (−) CIRCUIT AND GROUND. USING THE SCAN TOOL, PERFORM THE CCD BUS TEST. DOES THE SCAN TOOL SHOW “SHORT TO GROUND?”	REPLACE PMC.*	REPAIR THE OPEN CCD BUS (−) CIRCUIT.*

***Perform Verification TEST VER-1A. **Check connectors - Clean/repair as necessary.**

TEST VER–1A – VERIFICATION TEST

1. Leave the Scan Tool connected to the Data Link Connector (DLC).

   Reconnect any disconnected components.

   Reconnect Auxiliary Battery Negative Cable (if disconnected).

   Enable the Traction Battery Pack by turning the Service Disconnect Switch to the On position.

   Place vehicle in Ready Mode.

   With the Scan Tool, erase all trouble codes.

2. Road test the vehicle.

3. Check for trouble codes after the road test.

   If a trouble code sets during the road test, perform TEST 1.

   If no trouble codes were set during the test, return the vehicle to the customer.

POWER STEERING PUMP FLOW RATE AND PRESSURE TEST

The following procedure can be used to test the operation of the power steering system on the vehicle. This test will provide the flow rate of the power steering pump along with the maximum relief pressure. This test is to be performed any time a power steering system problem is present to determine if the power steering pump or power steering gear is not functioning properly. The following pressure and flow test is performed using Flow/Pressure Tester, Special Tool 6815 (Fig. 2).

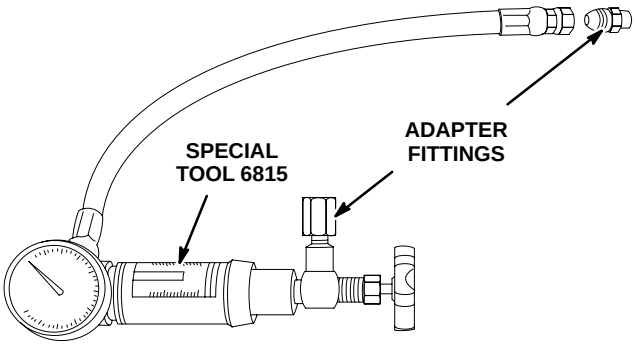

Fig. 2 Power Steering Pump Flow/Pressure Tester

(1) Check that pump and controller are operating and receiving voltage inputs. Refer to “Power Steering Diagnostics” in this manual.

(2) Disconnect power steering fluid pressure hose at the power steering pump. Use a container for dripping fluid.

(3) Connect Pressure Gauge, Special Tool from kit 6815 to both hoses using adapter fittings. Connect spare pressure hose to power steering pump pressure hose fitting.

(4) Completely open valve on Special Tool 6815.

(5) Start vehicle and let run long enough to circulate power steering fluid through flow/pressure test and get air out of fluid. Then shut off vehicle.

(6) Check power steering fluid level and add fluid as necessary. Start vehicle again.

(7) Pressure gauge should read below 862 kPa (125 psi). If above, inspect hoses for restrictions and repair as necessary. The initial pressure reading should be in the range of 345 – 552 kPa (50 – 80 psi). The flow meter should read between 1.3 and 1.9 gallons per minute (GPM).

CAUTION: The following test procedure involves testing power steering pump maximum pressure output and flow control valve operation. Do not leave valve closed for more than 5 seconds as the pump could be damaged.

(8) Close valve fully three times and record highest pressure indicated each time. **All three readings must be within specifications and within 345 kPa (50 psi) of each other.**

NOTE: Power steering pump maximum relief pressure is 8605 to 10308 kPa (1248 to 1495 psi).

- If power steering pump pressures are within the specifications, but not within 345 kPa (50 psi) of each other, then replace power steering pump.
- If pressures are within 345 kPa (50 psi) of each other, but below specifications, then replace the power steering pump.

CAUTION: Do not force the pump to operate against the stops for more than 5 seconds at a time. Pump damage will result.

(9) Open test valve. Turn steering wheel to the extreme left and right positions, recording the highest indicated pressure at each position. Compare pressure gauge readings to power steering pump specifications. If highest output pressures are not the same against either stop, the steering gear is leaking internally and must be replaced.

COMPONENT SERVICE

WARNING: THIS VEHICLE CONTAINS 28 12–VOLT (NOMINAL) BATTERIES CONNECTED IN SERIES. ALWAYS DISCONNECT THE SERVICE DISCONNECT SWITCH BEFORE ATTEMPTING ANY SERVICE PROCEDURES. FAILURE TO DISCONNECT THE SERVICE DISCONNECT SWITCH WHEN SERVICING THE VEHICLE CAN LEAD TO SEVERE PERSONAL INJURY OR DEATH BY ELECTROCUTION OR COMPONENT DAMAGE.

POWER STEERING PRESSURE LINE

REMOVAL

(1) Disable the traction battery pack by turning the high voltage service disconnect switch to Off.

(2) Disconnect and isolate the auxiliary battery negative cable.

(3) Remove PCA. Refer to PCA removal and installation procedure in powertrain group 9.

(4) Remove cap from power steering reservoir (fig. 3).

(5) Using a siphon pump, remove as much power steering fluid as possible from the power steering fluid reservoir (Fig. 3).

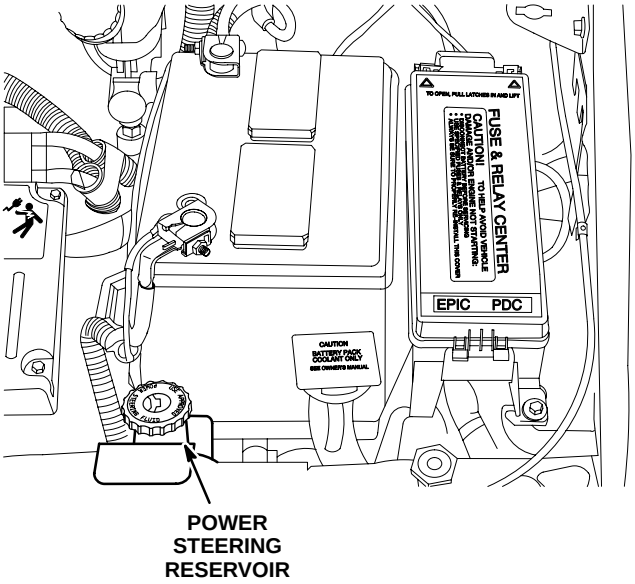

Fig. 3 EPHS Reservoir

(6) Disconnect vacuum pump connectors and hose.

(7) Remove vacuum pump (fig. 4).

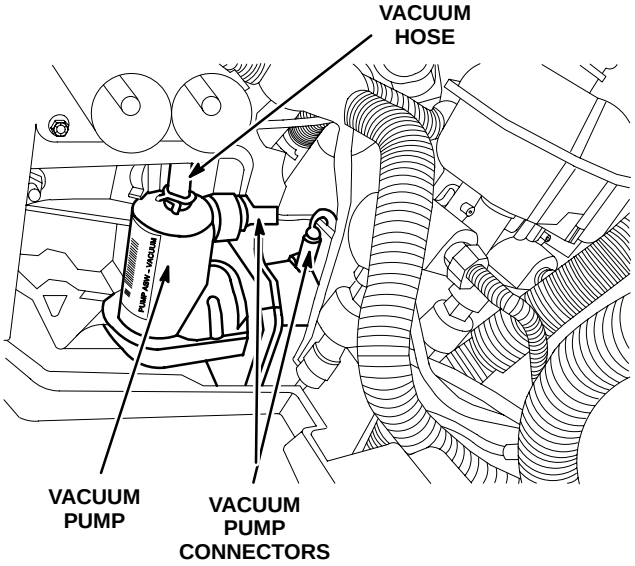

Fig. 4 Vacuum Pump

(8) Disconnect power steering pressure line from rack and pinion assembly.

(9) Raise vehicle on hoist.

(10) Remove support bracket attached to auxiliary battery tray support (fig. 5).

(11) Disconnect power steering pressure line from power steering pump.

(12) Remove power steering pressure line.

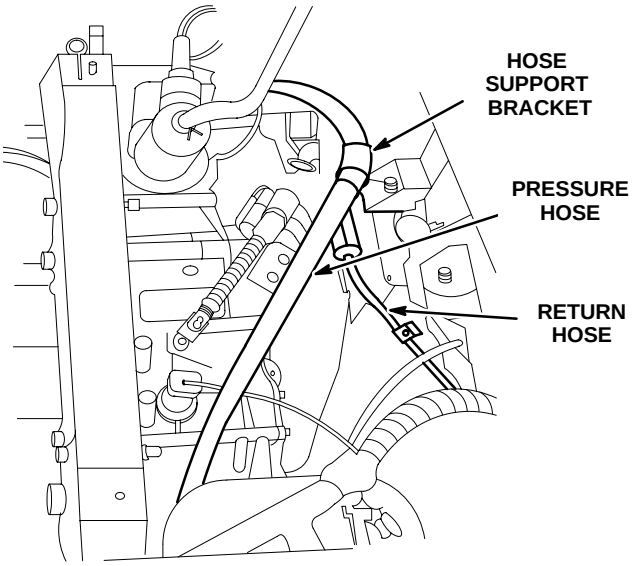

Fig. 5 Hose Support Bracket

POWER STEERING PRESSURE LINE (Continued)

INSTALLATION

(1) Connect lower power steering line to power steering pump.
(2) Connect support bracket attached to auxiliary battery tray support.
(3) Lower vehicle.
(4) Attach power steering pressure line to rack and pinion assembly.
(5) Install vacuum pump.
(6) Connect vacuum pump connectors and hose.
(7) Install PCA. Refer to PCA Removal and Installation procedures in powertrain group 9.
(8) Fill power steering reservoir to correct level.
(9) Replace cap on power steering reservoir.
(10) Connect the auxiliary battery negative cable.
(11) Enable the traction battery pack by turning the high voltage service disconnect switch to On.
(12) Evacuate any entrapped air, by running the vehicle and turning the steering wheel from left stop to right stop multiple times.
(13) Check and add fluid if necessary.

POWER STEERING PUMP/MOTOR/ CONTROLLER (PMC)

DESCRIPTION

The Pump/Motor/Controller (PMC) replaces the belt driven pump in a conventional power steering system. A vane pump is driven by an electric motor through a common shaft. The high voltage motor is controlled by a microprocessor which receives and transmits information on the CCD bus.

REMOVAL

(1) Disable the traction battery pack by turning the high voltage service disconnect switch to Off.
(2) Disconnect and isolate the auxiliary battery negative cable.
(3) Remove cap from power steering reservoir (fig. 6).

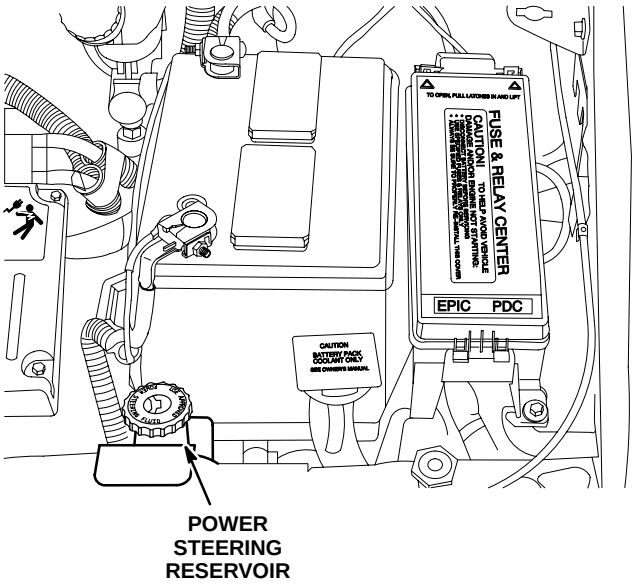

Fig. 6 Power Steering Reservoir

(4) Using a siphon pump, remove as much power steering fluid as possible from the power steering fluid reservoir.

POWER STEERING PUMP/MOTOR/CONTROLLER (Continued)

(5) Disconnect the high voltage electrical connector at the PMC (Fig. 7).

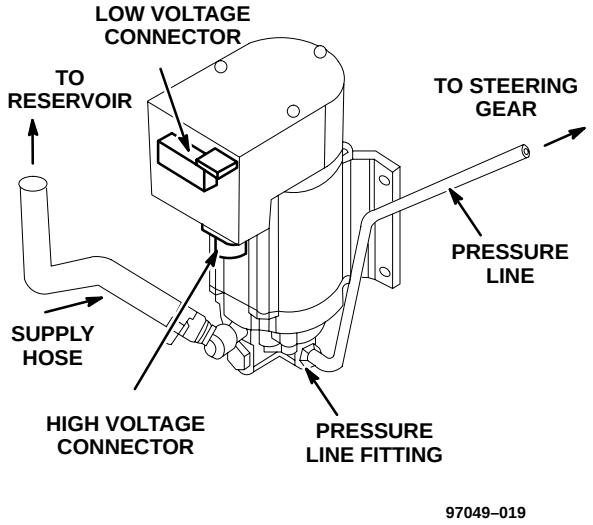

Fig. 7 Pump/Motor/Controller

(6) Disconnect the low voltage electrical connector at the PMC.
(7) Remove the power steering pressure hose.
(8) Remove the power steering supply hose.
(9) Remove the nuts and washers (3) from the studs attaching the PMC unit to the vehicle.
(10) Remove the PMC.

INSTALLATION

(1) Install the PMC on the mounting studs in the vehicle.
(2) Install the washers and nuts (3). Tighten to 28.2 – 33.9 N•m (250 – 300 in. lbs.) torque.
(3) Install the power steering supply hose.
(4) Install the power steering pressure hose. Tighten to 39.2 – 49.0 N•m (347 – 434 in. lbs.) torque.
(5) Connect the low voltage electrical connector at the PMC.
(6) Connect the high voltage electrical connector at the PMC.
(7) Fill power steering reservoir to correct level.
(8) Replace cap on power steering reservoir.
(9) Connect the auxiliary battery negative cable.
(10) Enable the traction battery pack by turning the high voltage service disconnect switch to On.
(11) Evacuate any entrapped air, by running the vehicle and turning the steering wheel from left stop to right stop multiple times.
(12) Check and add fluid if necessary.

POWER STEERING RETURN LINE

REMOVAL

(1) Disable the traction battery pack by turning the high voltage service disconnect switch to Off.
(2) Disconnect and isolate the auxiliary battery negative cable.
(3) Remove cap from power steering reservoir (fig. 8).

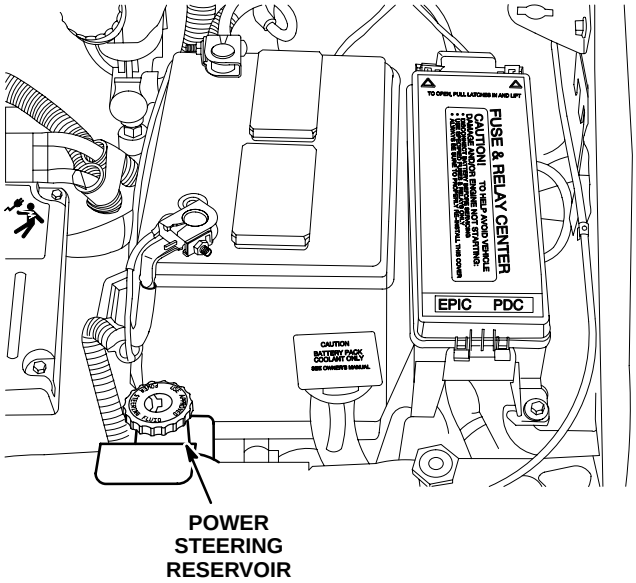

Fig. 8 Power Steering Reservoir

(4) Using a siphon pump, remove as much power steering fluid as possible from the power steering fluid reservoir.
(5) Remove PCA. Refer to PCA removal and installation procedure in PCA group 9A.
(6) Disconnect vacuum pump connectors and hose.

POWER STEERING RETURN LINE (Continued)

(7) Remove vacuum pump (fig. 9).

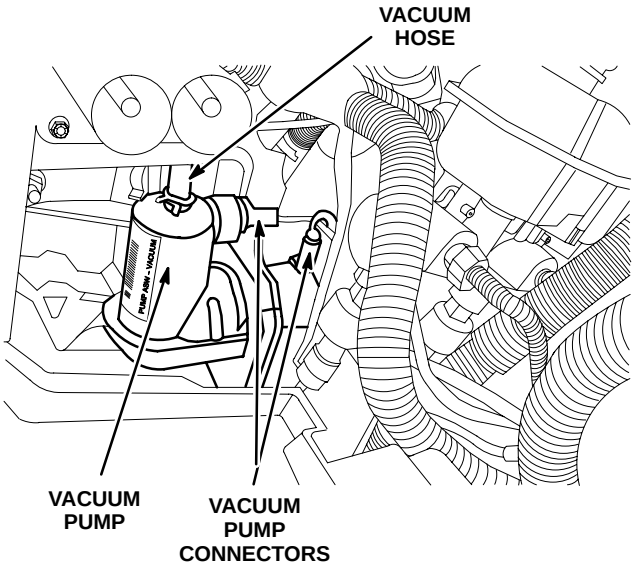

Fig. 9 Vacuum Pump

(8) Disconnect power steering return line from rack and pinion assembly.
(9) Raise vehicle on hoist.
(10) Remove support bracket attached to auxiliary battery tray support (fig. 10).

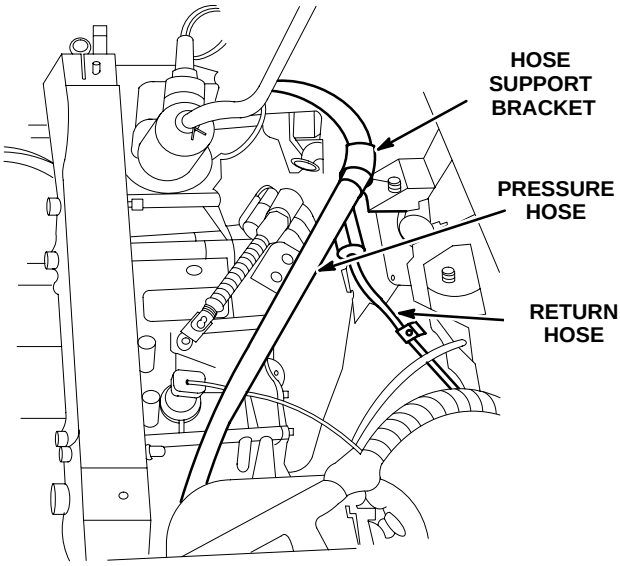

Fig. 10 Hose Support Bracket

(11) Disconnect power steering return line from power steering reservoir.
(12) Remove power steering return line.

INSTALLATION

(1) Connect power steering return line to power steering reservoir.
(2) Connect support bracket attached to auxiliary battery tray support.
(3) Lower vehicle.
(4) Attach power steering pressure line to rack and pinion assembly.
(5) Install vacuum pump.
(6) Connect vacuum pump connectors and hose.
(7) Install PCA. Refer to PCA Removal and Installation procedures in powertrain group 9.
(8) Fill power steering reservoir to correct level.
(9) Replace cap on power steering reservoir.
(10) Connect the auxiliary battery negative cable.
(11) Enable the traction battery pack by turning the high voltage service disconnect switch to On.
(12) Evacuate any entrapped air, by running the vehicle and turning the steering wheel from left stop to right stop multiple times.
(13) Check and add fluid if necessary.

SYSTEM SPECIFICATIONS

FLUID TYPE . . . . . STANDARD MOPAR

Flow rate when
vehicle is in Park . . . . . 1.8 GPM

Flow rate at
highway speeds . . . . . 0.74 GPM

Power Steering Pump
Max. Relief Pressure . . . . . 8605 – 10308 kPa
(1248 – 1495 psi)

TORQUE SPECIFICATIONS

DESCRIPTION	TORQUE
PMC Mounting Nuts	28.2 – 33.9 N•m (250 – 300 ft. lbs.)
Pressure Line Tube Nut	39.2 – 49.0 N•m (347 – 434 ft. lbs.)
Return Line Tube Nut	39.2 – 49.0 N•m (347 – 434 ft. lbs.)

SPECIAL TOOLS

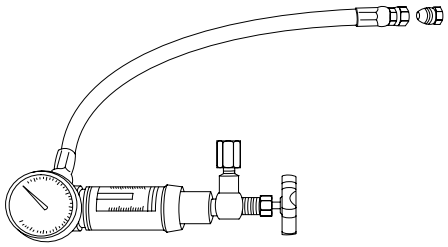

Power Steering Pump
Flow/Pressure Tester 6815

WIRING DIAGRAMS

TABLE OF CONTENTS

	PAGE
BATTERY PACK COOLANT PUMP	19–16
G103	19–15
JUNCTION BLOCK	19–15
LVS1	19–15
LVS9	19–15
LVS18	19–15
LVS19	19–15
LVS31	19–15
MAIN CONTROL MODULE	19–15
POWER DISTRIBUTION CENTER	19–15
POWER STEERING PUMP	19–15, 16
POWERTRAIN CONTROLLER ASSEMBLY	19–15, 16
PTC 1 (JB)	19–15
PTC HEATER CONTROLLER	19–16

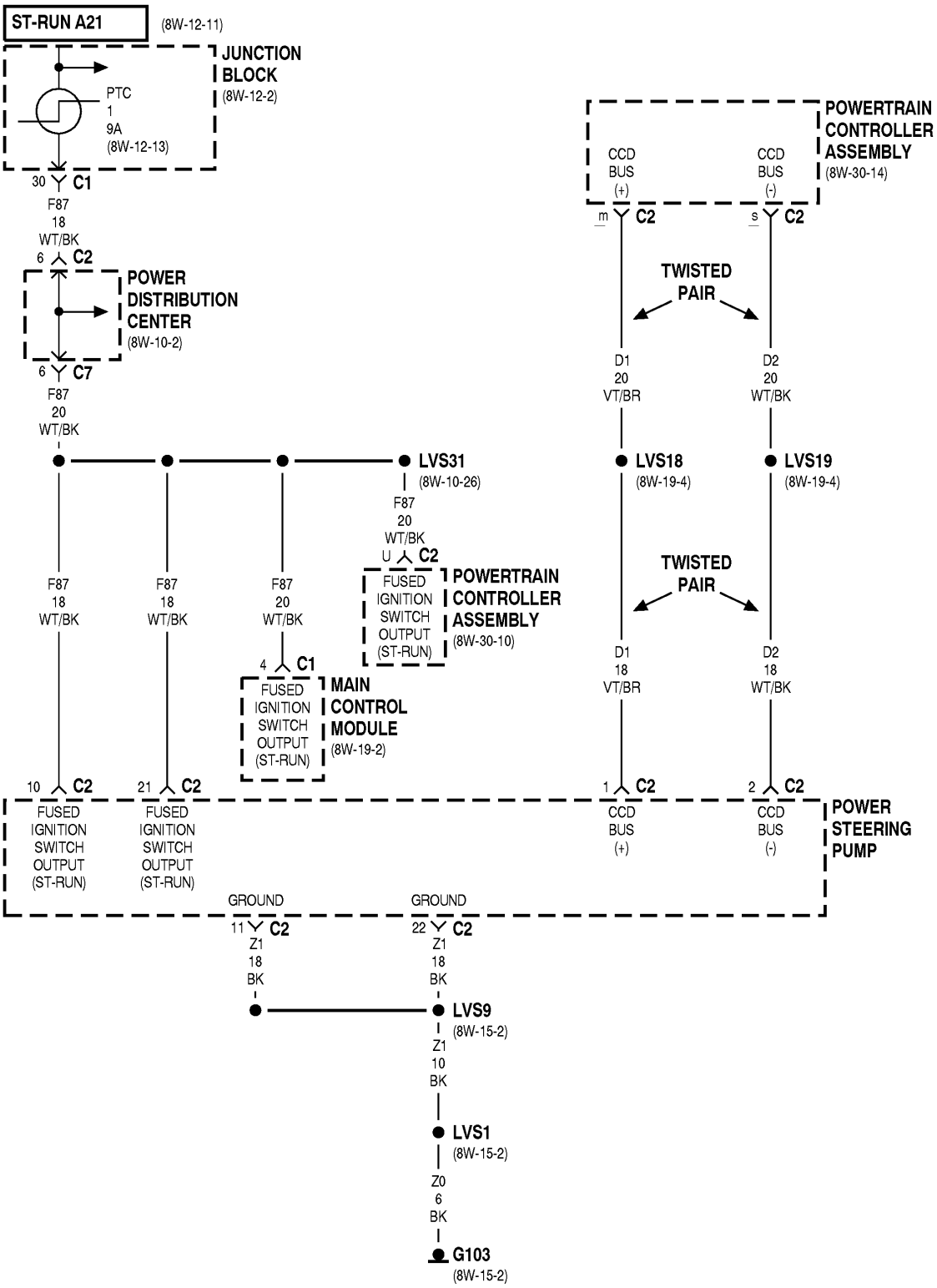
ST-RUN A21
(8W-12-11)
JUNCTION BLOCK
(8W-12-2)
PTC
1
9A
(8W-12-13)
30 C1
F87
18
WT/BK
6 C2
POWER DISTRIBUTION CENTER
(8W-10-2)
6 C7
F87
20
WT/BK
POWERTRAIN CONTROLLER ASSEMBLY
(8W-30-14)
CCD BUS (+)
CCD BUS (-)
m C2
s C2
TWISTED PAIR
D1
20
VT/BR
D2
20
WT/BK
LVS31
(8W-10-26)
F87
20
WT/BK
U C2
FUSED IGNITION SWITCH OUTPUT (ST-RUN)
POWERTRAIN CONTROLLER ASSEMBLY
(8W-30-10)
LVS18
(8W-19-4)
LVS19
(8W-19-4)
TWISTED PAIR
F87
18
WT/BK
F87
18
WT/BK
F87
20
WT/BK
4 C1
FUSED IGNITION SWITCH OUTPUT (ST-RUN)
MAIN CONTROL MODULE
(8W-19-2)
D1
18
VT/BR
D2
18
WT/BK
10 C2
21 C2
1 C2
2 C2
FUSED IGNITION SWITCH OUTPUT (ST-RUN)
FUSED IGNITION SWITCH OUTPUT (ST-RUN)
CCD BUS (+)
CCD BUS (-)
POWER STEERING PUMP
GROUND
GROUND
11 C2
22 C2
Z1
18
BK
Z1
18
BK
LVS9
(8W-15-2)
Z1
10
BK
LVS1
(8W-15-2)
Z0
6
BK
G103
(8W-15-2)

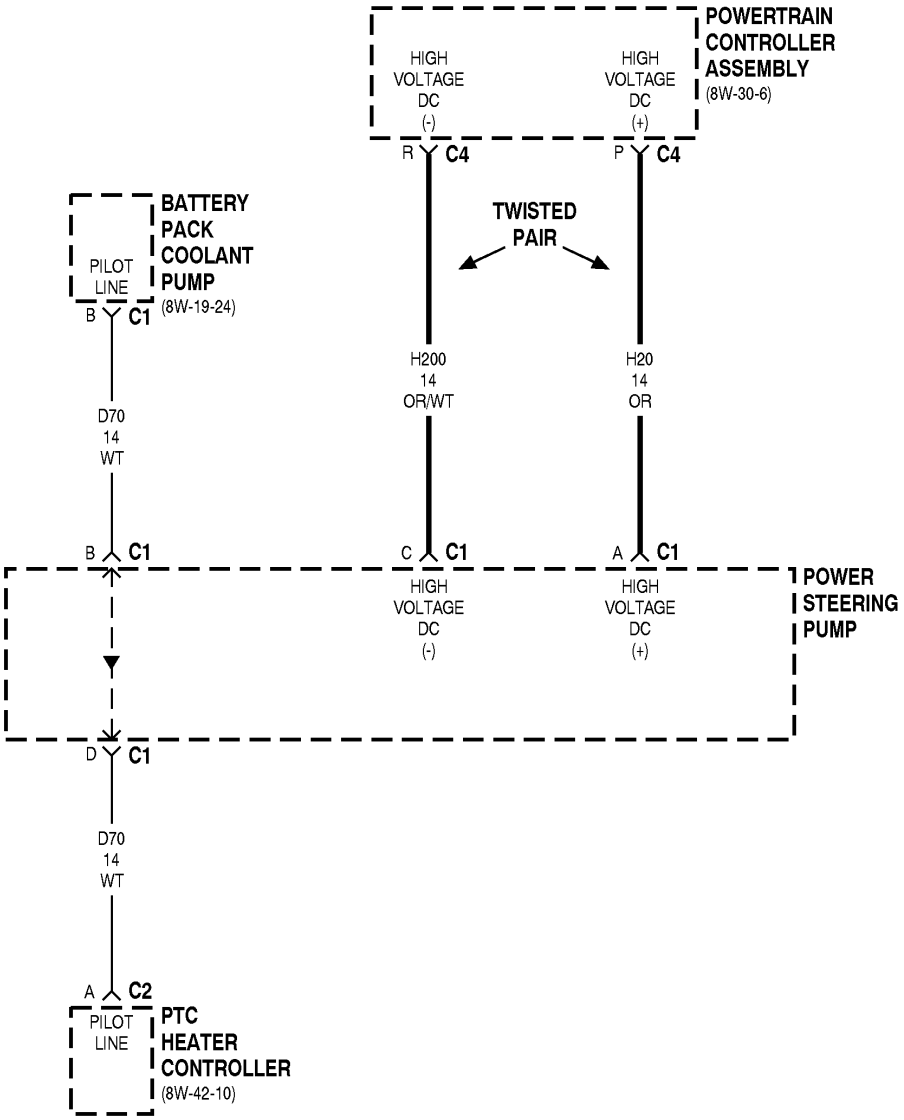
POWERTRAIN CONTROLLER ASSEMBLY
(8W-30-6)
HIGH VOLTAGE DC (-)
HIGH VOLTAGE DC (+)
R C4
P C4
TWISTED PAIR
BATTERY PACK COOLANT PUMP
(8W-19-24)
PILOT LINE
B C1
H200 14 OR/WT
H20 14 OR
D70 14 WT
B C1
C C1
A C1
HIGH VOLTAGE DC (-)
HIGH VOLTAGE DC (+)
POWER STEERING PUMP
D C1
D70 14 WT
A C2
PILOT LINE
PTC HEATER CONTROLLER
(8W-42-10)

SPEED REDUCER

TABLE OF CONTENTS

	PAGE
DESCRIPTION	**1**
OPERATION	**1**
COMPONENT SERVICE	**1**
SPEED REDUCER	1
TORQUE SPECIFICATIONS	**3**

DESCRIPTION

The EPIC utilizes a transaxle that is unique. However, a few parts are shared with the gasoline version automatic transmission. The park selection is the same as the gasoline version; it uses a parking sprag and pawl. The EPIC transaxle also uses a Transmission Range Sensor (TRS) to monitor the gear range selection. The differential assembly is the same as an automatic except for the ring gear. The EPIC uses only four shift ranges: Park, Reverse, Neutral and Drive.

OPERATION

The powertrain in the EPIC is direct drive; no clutch or torque converter is used. This means that whenever the wheels are turning, the traction motor is also turning. Whenever the vehicle is in gear and not moving, no current is being applied to the traction motor. When the vehicle is in reverse, phase sequence to the traction motor is changed, thus allowing the motor to turn in the reverse direction.

COMPONENT SERVICE

SPEED REDUCER

REMOVAL

(1) Disable the traction battery pack by turning the service disconnect switch to Off.
(2) Disconnect and remove the auxiliary battery.
(3) Remove vacuum pump/motor assembly. Refer to “Vacuum pump removal procedure” in this manual.
(4) Remove shift linkage.
(5) Disconnect Transaxle Range Sensor connector.
(6) Raise vehicle on a hoist. Refer to “Lifting Procedure” in this manual.
(7) Remove front wheels.
(8) Remove left fender liner.
(9) Remove right splash shield.
(10) Drain transaxle oil.
(11) Remove axle shaft cotter pins and nuts.
(12) Remove pinch bolts and axle shafts.
(13) Remove battery coolant pump. Refer to Battery Coolant Pump Removal Procedures in group 7 of this manual.
(14) Pinch off rubber battery cooling hoses at both ends of cradle outlet tube (Fig. 1).

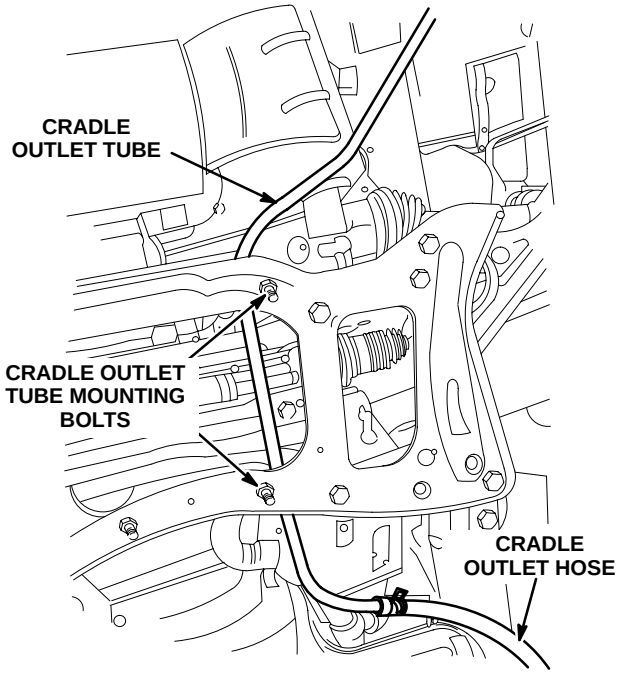

Fig. 1 Cradle Outlet Tube

(15) Remove cradle outlet tube.
(16) Setup lifting device and position under transaxle.

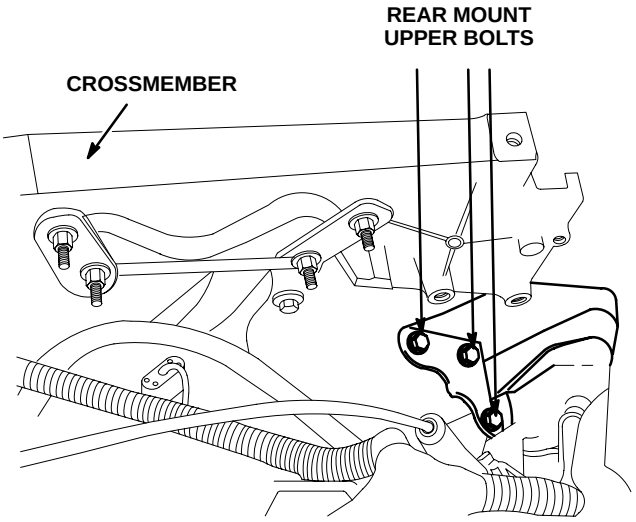

Fig. 2 Rear Mount Upper Bolts

(17) Remove rear mount upper bolts (3) (Fig. 2).
(18) Remove rear mount lower bolt to transaxle (1).
(19) Remove lower rear bell housing bolt on motor side.
(20) Remove frame to left mount bolt.

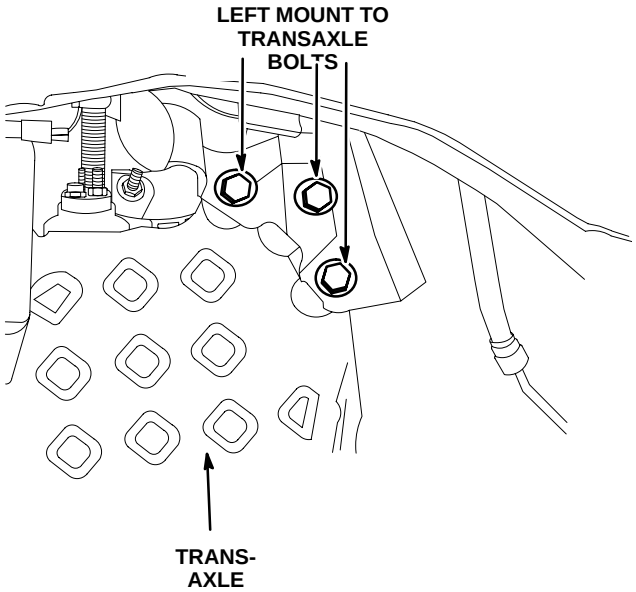

Fig. 3 Left Mount

(21) Remove left mount to transaxle bolts (3) and remove left mount (Fig. 3).
(22) Remove upper bell housing bolts (2) and front lower bell housing bolt.
(23) Separate transaxle from motor, back out and rotate differential down to clear mounts and complete removal.

INSTALLATION

(1) Secure transaxle on lifting device.
(2) Raise transaxle.
(3) Connect transaxle to motor.
(4) Install transaxle side bell housing bolts (3) and motor side bell housing bolt. Torque to 75 N•m (55 ft. lbs.).
(5) Install left mount to transaxle. Torque left mount to transaxle bolts (3) to 88 N•m (65 ft. lbs.).
(6) Install left mount to frame bolt. Torque to 88 N•m (65 ft. lbs.).
(7) Install rear mount lower bolt to transaxle. Torque to 88 N•m (65 ft. lbs.).
(8) Install rear mount upper bolts (3). Torque to 88 N•m (65 ft. lbs.).
(9) Install battery coolant tube and attach hoses.
(10) Install battery cooling pump. Refer to Battery Coolant Pump Installation procedures in group 7 of this manual.
(11) Remove all clamps from coolant hoses.
(12) Install axle shafts and pinch bolts.
(13) Install axle nuts and cotter pins.
(14) Fill transaxle oil.
(15) Install left splash shield.
(16) Install front wheels.
(17) Remove support and lower vehicle.
(18) Install vacuum pump/motor assembly. Torque mounting bolts to 15 N•m (135 in. lbs.).
(19) Connect vacuum hose at brake power booster.
(20) Install vacuum pump/motor connectors (2).
(21) Connect Transaxle Range Sensor connector.
(22) Install shift linkage. Adjust as necessary.
(23) Install auxiliary battery.
(24) Enable the traction battery pack by turning the service disconnect switch to On.

TORQUE SPECIFICATIONS

DESCRIPTION	TORQUE
Battery Cooling Pump Mounting Bolts	12 N•m (105 in. lbs.)
Bell Housing Bolts	75 N•m (55 ft. lbs.)
Left Mount to Frame Bolt	88 N•m (65 ft. lbs.)
Rear Mount Lower Bolts to Transaxle	88 N•m (65 ft. lbs.)
Rear Mount Upper Bolts	88 N•m (65 ft. lbs.)
Vacuum Pump/Motor Assembly Mounting Assembly Bolts	15 N•m (135 in. lbs.)

THIS PAGE INTENTIONALLY LEFT BLANK

HEATING AND AIR CONDITIONING

TABLE OF CONTENTS

PAGE

DESCRIPTION 2
COMPRESSOR HIGH PRESSURE RELIEF VALVE 2
CONDENSATION DRAIN 2
COOLING MODULE 2
COOLING SYSTEM REQUIREMENTS 2
ELECTRIC BACK LIGHT (EBL) 2
ELECTRIC WIPER DEICE (EWD) 3
FOUR WAY VALVE 3
HEAT EXCHANGER MODULE 3
HANDLING TUBING AND FITTINGS 3
OIL LEVEL 3
OUTSIDE FANS 4
PRESSURE TRANSDUCERS AND THERMISTORS 4
R–134A REFRIGERANT 4
SIDE DOOR A/C HEAT OUTLETS 4
SIDE WINDOW DEMISTOR 5

OPERATION 5
SYSTEM AIRFLOW 5

SAFETY PRECAUTIONS AND WARNINGS 6
DIAGNOSIS AND TESTING 7
A/C HIGH SIDE PRESSURE TRANSDUCER 7
A/C LOW SIDE PRESSURE TRANSDUCER 7
A/C PERFORMANCE TEST PROCEDURES 7
A/C PERFORMANCE TEST 8
ACTUATOR CALIBRATION 9
ACTUATOR CALIBRATION TEST ENTRY 9
BLEND/PASSENGER ACTUATOR BACKGROUND 10
BLOWER MOTOR AND WHEEL ASSEMBLY 10
COMPRESSOR NOISE DIAGNOSIS 10
COOLDOWN TEST 10
EEPROM DATA 11
EXPANSION VALVE 11
HEATER PERFORMANCE TEST 11
MODE ACTUATOR BACKGROUND 11
POSSIBLE LOCATION OR CAUSE OF INSUFFICIENT HEAT 11
POTENTIOMETER CALIBRATION 12
RECIRC ACTUATOR BACKGROUND 12
TEMPERATURE CONTROL 12

DIAGNOSTIC TESTS 14
DIAGNOSTIC CHARTS 89
COMPRESSOR 89
ELECTRONIC EXPANSION VALVE 91
FOUR–WAY REVERSING VALVE 92
PTC HEATER CORE 93
SHUT–OFF VALVE 95

PAGE

STANDARD PROCEDURES 96
CHARGE LEVEL CHECK OR FILL 96
LOW REFRIGERANT LEVEL LEAK TEST 96
REFRIGERANT OIL LEVEL CHECK 97
REFRIGERANT SYSTEM EVACUATION 97
SERVICING REFRIGERANT OIL LEVEL 97
STICKING HVAC CONTROL HEAD PUSH BUTTONS 98
SYSTEM LEAK CHECKING 98

COMPONENT SERVICE 98
A/C AUXILIARY OUTSIDE COIL 98
A/C OUTSIDE COIL 99
A/C SERVICE PORT SCHRADER VALVES 100
BI–DIRECTIONAL LINE 101
BLEND/AIR CHAMBER THERMISTOR 101
COMPRESSOR 102
COMPRESSOR CONTROLLER 103
COMPRESSOR TO HEAT EXCHANGER LINE 104
ELECTRONIC EXPANSION VALVE (EXV) 104
FILTER DRYER 105
FLOOR DUCT THERMISTOR 105
HEAT EXCHANGER MODULE 106
HEAT EXCHANGER TO RECEIVER DRIER LINE 107
HVAC CONTROL HEAD 107
HVAC UNIT ASSEMBLY 108
INSIDE COIL 109
INSIDE COIL FIN PROBE (THERMISTOR) 110
INSIDE COIL LINE 110
OUTSIDE COIL LINE 110
OUTSIDE COIL TO FILTER DRYER LINE 111
PANEL DUCT THERMISTOR 111
POSITIVE TEMPERATURE COEFFICIENT (PTC) HEATER CONTROLLER 112
PRE–INSIDE COIL THERMISTOR 113
PTC HEATER CORE 114
POST INSIDE COIL THERMISTOR 114
SOLID STATE BLOWER RELAY 114

TORQUE SPECIFICATIONS 116

WIRING DIAGRAMS 117

DESCRIPTION

All EPIC vehicles come equipped with a combination heater and air conditioning system. The Heating, Ventilation and Air Conditioning (HVAC) unit allows for three different air intake options: 100% fresh air, 100% recirculated air and a mixture of both fresh and recirculated air. The operator has the choice of inlet air modes except in DEFROST mode. In DEFROST mode, 100% fresh air overrides all other air intake choices that have been selected. The HVAC system is capable of delivering either untreated, heated or cooled air to the passenger compartment. Untreated air is obtained by setting the temperature lever to the full cold position and not selecting the A/C button.

The HVAC system also provides cooling to the traction battery pack when battery temperatures are sufficiently warm during operation or charging. To provide cooling to the batteries, the A/C system may be activated even though the HVAC system is OFF.

The HVAC system can still provide heating or cooling of the passenger compartment while cooling the batteries, but passenger cooling abilities may be reduced during battery cooling. Battery pack cooling is obtained by circulating refrigerant around battery pack coolant as it passes through a heat exchanger. Flow of the refrigerant to the heat exchanger is controlled by an electric solenoid shut–off valve. When battery cooling is not necessary, the valve is closed and refrigerant flow is blocked.

COMPRESSOR HIGH PRESSURE RELIEF VALVE

The High Pressure Relief Valve prevents damage to the air conditioning system if excessive pressure develops. Excessive pressure can be caused by outside coil air flow blockage, refrigerant overcharge or air and moisture in the system. The High Pressure Relief Valve vents only a small amount of refrigerant necessary to reduce system pressure and then reseats itself. The majority of the refrigerant is conserved in the system. The valve is calibrated to vent at a pressure of 3450 to 4140 kPa (500 to 600 psi). If a valve has vented a small amount of refrigerant, it does not necessarily mean the valve is defective.

The High Pressure Relief Valve is located on the compressor manifold at the discharge passage.

NOTE: Special effort must be used to keep all R–134a system components moisture–free. Moisture in the oil is very difficult to remove and will cause a reliability problem with the compressor.

CONDENSATION DRAIN

Condensation from the inside coil housing is drained through the dash panel and onto the ground. This drain must be kept open to prevent water from collecting in the bottom of the housing. If the drain is blocked, condensation cannot drain causing water to back up and spill into the passenger compartment. It is normal to see condensation drainage below the vehicle.

COOLING MODULE

The cooling module consists of an oil cooler, outside coil, fan module, oil cooler tube and hose assemblies, A/C tube and hose assemblies. The purpose of the cooling module for the EPIC is:

(1) Provide cooling and maintain temperature of the turbine oil used to control the temperature stator in the traction motor.

(2) Provide condensing of the A/C refrigerant when operating in the A/C cooling mode and evaporating of the refrigerant when operating in heat pump mode.

COOLING SYSTEM REQUIREMENTS

To maintain ample temperature levels from the HVAC system, the cooling system must be in proper working order.

The use of a bug screen is not recommended. Any obstructions forward of the outside coil condenser can reduce the effectiveness of the air conditioning system.

ELECTRIC BACK LIGHT (EBL)

A momentary ON/OFF switch activates/deactivates the EBL whenever the ignition is On. The EBL Light Emitting Diode (LED) lights whenever the EBL is On. The EBL will operate whenever ignition is powered, regardless of blower operation. The EBL operates independently of all other modes. The EWD will also function at the same time as the EBL.

ELECTRIC BACK LIGHT (Continued)

To initiate a 10 minute EBL cycle, press the EBL ON/OFF switch. The EBL cycle will automatically end after 10 minutes. The EBL cycle can be ended at any time by pressing the EBL switch or turning Off the ignition.

ELECTRIC WIPER DEICE (EWD)

The EWD is a heating element located on the lower portion of the windshield. The EWD assists in defrosting the wiper blades when they are in the Off position. The EWD feature is activated when the control head is in the Mix or Defrost mode.

FOUR-WAY VALVE

The four-way valve is used to reverse the refrigerant flow to allow the A/C compressor to become a heat pump and to heat the passenger compartment. This is done with the use of a solenoid that is controlled by the HVAC control head.

HEAT EXCHANGER MODULE

The heat exchanger module is part of the HVAC and battery pack cooling systems. For heat exchanger module and associated refrigerant lines refer to the “Cooling System” section.

HANDLING TUBING AND FITTINGS

Kinks in the refrigerant tubing or sharp bends in the refrigerant hose lines will greatly reduce the capacity of the entire system. High pressures are produced in the system when it is operating. Extreme care must be exercised to make sure that all connections are pressure tight. Dirt and moisture can enter the system when it is opened for repair or replacement of lines or components. The refrigerant oil will absorb moisture readily out of the air. This moisture will convert into acids within a closed system.

The following precautions MUST be observed:

The system must be completely empty before opening any fitting or connection in the refrigeration system. Open fittings with caution, even after the system has been emptied. If any pressure is noticed as a fitting is loosened, retighten fitting and evacuate the system again. A good rule for the flexible hose lines is to keep the radius of all bends at least 10 times the diameter of the hose. Sharper bends will reduce the flow of refrigerant. Inspect all flexible hose lines to make sure they are in good condition and properly routed.

The use of correct wrenches when making connections is very important. Improper wrenches or improper use of wrenches can damage the fittings.

The internal parts of the A/C system will remain stable as long as moisture–free refrigerant and refrigerant oil is used. Abnormal amounts of dirt, moisture or air can upset the chemical stability. This may cause operational troubles or even serious damage if present in more than very small quantities.

When opening a refrigeration system, have everything you will need to repair the system ready. This will minimize the amount of time the system must be opened. Cap or plug all lines and fittings as soon as they are opened. This will help prevent the entrance of dirt and moisture. All new lines and components should be capped or sealed until they are ready to be used.

All tools, including the refrigerant dispensing manifold, the manifold gauge set and test hoses should be kept clean and dry.

OIL LEVEL

It is important to have the correct amount of oil in the A/C system to ensure proper lubrication of the compressor. Too little oil will result in damage to the compressor. Too much oil will reduce the cooling capacity of the system and consequently result in higher discharge temperatures.

NOTE: The oil used in the compressor is ESTER COMPRESSOR OIL for R–134a refrigerant. Do not use any other oil. The oil container should be kept tightly capped until it is ready for use. Tightly cap afterwards to prevent contamination from dirt and moisture. Refrigerant oil will quickly absorb any moisture it comes in contact with. Special effort must be used to keep all R–134a system components moisture–free. Moisture in the oil is very difficult to remove and will cause a reliability problem with the compressor.

OIL LEVEL (Continued)

It will not be necessary to check the oil level in the compressor or to add oil unless there has been an oil loss. Oil loss at a leak point will be evident by the presence of a wet, shiny surface around the leak.

OUTSIDE FANS

The primary function of the outside fans is to provide motor cooling, but the control head can request outside fan operation if it is necessary for proper HVAC operation. The outside fans are controlled by the Main Control Module (MCM). The outside fans are the same as the gasoline version.

PRESSURE TRANSDUCERS AND THERMISTORS

There are two pressure transducers included in the HVAC system. The high pressure transducer is located on the discharge line of the compressor and measures the refrigerant discharge pressure. The low pressure transducer is located on the compressor suction line and measures the refrigerant suction pressure. There is a thermistor located in the compressor suction line which measures the temperature of the refrigerant suction gas. A thermistor is also located in the fins of the inside coil to sense coil freezing. Five thermistors are located within the HVAC unit to measure air temperature in several places for control and safety reasons. The control head monitors these thermistors and is accessible with the scan tool. In some cases, failure of any one of these sensors may cause the HVAC system or parts of it to be disabled.

R–134A REFRIGERANT

This vehicle uses a new type of refrigerant called R–134a. It is a non–toxic, non–flammable, clear colorless liquefied gas. R–134a refrigerant is not compatible with R–12 refrigerant in an air conditioning system. Even a small amount of R–12 in a R–134a system could cause compressor failure, refrigerant oil to sludge and/or poor performance. Never add any other type of refrigerant to a system designed to use R–134a refrigerant. System failure will occur.

The high pressure service port is located on the liquid line near the A/C compressor. The low pressure service port is located on the suction line near the A/C compressor.

When servicing a system, it is required that an air conditioning charging recovery/recycling machine be used. Contact an automotive service equipment supplier for proper equipment. Refer to the operating instructions provided with the equipment for operating.

A manifold gauge set must also be used in conjunction with the charging and/or recovery/recycling device. Only use gauges that have not been used for R–12. The service hoses on the gauge set should have manual (turn wheel) or automatic back flow valves at the service port connector ends. This will prevent refrigerant (R–134a) from being released into the atmosphere.

R–134a refrigerant requires a special type of compressor oil. When adding oil, make sure to use the oil that is specified on the under hood label. Due to the different characteristics of R–134a, it requires all new service procedures. The use of R–134a will have a positive environmental impact due to its zero ozone depletion and low global warming impact.

Refrigerant Oil Capacities		
Component	**ml**	**oz**
Compressor	*	*
Filter Dryer	30 ml	1.0 oz
Outside Coil	30 ml	1.0 oz
Inside Coil	60 ml	2.0 oz
Heat Exchanger	60 ml	2.0 oz

***The new compressor comes pre–filled with enough oil for a completely dry or new system. Always drain the new compressor then drain the old compressor and measure the oil removed. Add the same amount of new oil to the new compressor.**

SIDE DOOR A/C HEAT OUTLETS

The driver and passenger side doors have supplemental air outlets and ductwork. The air is channeled from the instrument panel to the door duct and to either the lower floor or upper door outlets. The air can be adjusted to blow on the second seats.

SIDE WINDOW DEMISTOR

The side window demistors direct air from the HVAC module to the front door glass to help control fogging. The outlets are located on the top forward corners of the front door panels. The demistors operate when the control mode selector is on the FLOOR, MIX or DEFROST setting.

OPERATION

The HVAC system delivers heated air by means of two separate heating systems depending upon the ambient temperature and the temperature lever position. At ambient temperatures below 4°C (40°F), air is heated by the high voltage Positive Temperature Coefficient (PTC) heater. As the temperature lever is moved from the full cold position toward the hot end of the scale, the PTC is powered and the blend door position is varied to give increasingly warmer outlet air. It is possible at low air flows and higher inlet air temperatures (due to the use of recirculated air) to get higher than desirable outlet air temperatures from the PTC. In these cases the control head will automatically adjust the blend door position so that the outlet air temperature will not exceed 71°C (160°F). The PTC will not be turned on at temperatures above 29°C (85°F). At ambient temperatures above 4°C (40°F) the heat pump will provide heat at a power savings compared to the PTC heater. The heat pump system works by reversing the flow of refrigerant in the A/C system by way of the four–way reversing valve causing the inside coil to become a heat rejecting condenser and the outside coil becomes a heat gathering evaporator. The heat pump will be the only source of heat as long as it meets the temperature needs of the operator. When the heat pump no longer maintains passenger compartment demands, the PTC heater will be turned on and the heat pump will shut down. Both units are NOT designed to run at the same time. It is likely that the heat pump will not provide sufficient heat to raise the interior temperature of the vehicle at ambient temperatures near 4°C (40°F). In these cases the system will transition to PTC heater to meet operator demand. If the A/C button is depressed or if the mode selector is set to any position between MIX and DEFROST, the air conditioning/DEFROST mode is entered. If the ambient temperature is above 4°C (40°F), the compressor will come on and provide the maximum amount of cooling when the temperature lever is in the full cold position. As the temperature lever is moved toward the hot end of the scale, the compressor speed decreases and less cooling is delivered until the temperature lever reaches 50% of its travel. Beyond this point the amount of cooling supplied is fixed and the air is reheated with the PTC heater. This mode of operation uses more energy than other HVAC modes, but is useful to clear fog from the windshield or to get moderate temperature air on a cool, but humid, day. If the ambient temperature is less than 4°C (40°F), the compressor will only operate to provide battery cooling and the temperature lever response is as described above for heater operation.

SYSTEM AIRFLOW

The system pulls outside (ambient) air through the cowl opening at the base of the windshield. It then goes into the plenum chamber above the A/C heater unit housing. It then passes through the inside coil. At this point the air flow can be directed either through or around the PTC heater assembly. This is done by adjusting the blend–air door with the temperature control lever on the control head. Ambient air intake can be shut off by closing the recirculating air door. This will recirculate the air that is already inside the vehicle. This is done by depressing the RECIRC button on the control head. Moving the mode control lever from MIX to DEFROST automatically activates the compressor and deactivates the recirculation mode (100% FRESH air). Electric Wiper DeIce (EWD) is activated when the mode control lever is in the MIX or DEFROST position.

CAUTION: In cold weather, use of the recirculation mode may lead to excessive window fogging. The recirculation mode is automatically deactivated and the EWD activated in the MIX and DEFROST modes to improve the window clearing operation above 4°C (40°F).

SAFETY PRECAUTIONS AND WARNINGS

WARNING: AVOID BREATHING A/C REFRIGERANT AND LUBRICANT VAPOR OR MIST. EXPOSURE MAY IRRITATE EYES, NOSE AND THROAT. USE ONLY APPROVED SERVICE EQUIPMENT MEETING SAE REQUIREMENTS TO DISCHARGE R–134A SYSTEM. IF ACCIDENTAL SYSTEM DISCHARGE OCCURS, VENTILATE WORK AREA BEFORE RESUMING SERVICE.

WARNING: R–134A SERVICE EQUIPMENT OR VEHICLE A/C SYSTEM SHOULD NOT BE PRESSURE TESTED OR LEAK TESTED WITH COMPRESSED AIR. SOME MIXTURES OF AIR/R–134A HAVE BEEN SHOWN TO BE COMBUSTIBLE AT ELEVATED PRESSURES. THESE MIXTURES ARE POTENTIALLY DANGEROUS AND MAY RESULT IN FIRE OR EXPLOSION CAUSING INJURY OR PROPERTY DAMAGE.

WARNING: DO NOT ALLOW UNNECESSARY PERSONNEL IN THE WORK AREA. UNNECESSARY PERSONNEL PUT EVERYONE INVOLVED AT GREATER RISK OF INJURY OF ELECTROCUTION OR COMPONENT DAMAGE.

WARNING: THE EPIC IS POWERED BY BOTH AC AND DC VOLTAGES THAT CAN INFLICT SEVERE PERSONAL INJURY OR DEATH.

WARNING: NEVER TOUCH A PERSON WHO HAS BEEN ELECTROCUTED. FIRST DEACTIVATE THE ELECTRICITY AT THE SOURCE. IF THAT IS NOT POSSIBLE, MOVE THE PERSON AWAY FROM THE ELECTRICAL SOURCE WITH A NON CONDUCTIVE OBJECT (EG. RUBBER GLOVES, DRY WOOD, ETC.)

WARNING: ALWAYS WEAR THE SPECIFIED PROTECTIVE CLOTHING AND USE INSULATED VOLTAGE-RATED SPECIAL SERVICE TOOLS AND EQUIPMENT WHEN WORKING WITH THE EPIC. FAILURE TO DO SO CAN CAUSE INJURY OR DEATH.

WARNING: ALWAYS WORK WITH ANOTHER INDIVIDUAL WHEN WORKING AROUND HIGH VOLTAGE. WORKING ALONE CAN PREVENT EMERGENCY PERSONNEL FROM BEING CONTACTED IN THE EVENT OF AN EMERGENCY.

WARNING: WHEN SERVICING THE EPIC ELECTRICAL VEHICLE, IT IS CRITICAL THAT PERSONNEL WEAR EYE PROTECTION AND REMOVE ALL METAL JEWELRY SUCH AS WATCHBANDS, RINGS AND BRACELETS THAT MIGHT MAKE AN INADVERTENT ELECTRICAL CONTACT.

WARNING: WHENEVER POSSIBLE WORK WITH ONLY ONE HAND IN CONTACT WITH THE VEHICLE. THIS WILL MINIMIZE THE EFFECT OF HIGH VOLTAGE SHOCK TO THE BODY. FAILURE TO OBSERVE THIS RULE CAN LEAD TO SEVERE BODILY INJURY OR DEATH.

WARNING: TAKE THE TIME TO BE SAFE, DON'T RUSH THROUGH THE JOB. FAILURE TO TAKE THE PROPER SAFETY PRECAUTIONS MAY LEAD TO BODILY INJURY OR DEATH.

WARNING: MOST ELECTRICAL ACCIDENTS ARE THE RESULT OF INCORRECT OR CARELESS ACTIONS, NOT EQUIPMENT. FAILURE TO FOLLOW THE CORRECT PROCEDURES EXACTLY MAY RESULT IN BODILY INJURY OR DEATH.

CAUTION: Do not remove the actuators from the Heater/AC unit assembly with the power applied. Removal should only be done with the ignition Off. The actuators have no mechanical stops to limit the travel. If the actuator rotates and is not connected to the unit assembly, it will become uncalibrated.

CAUTION: If you are not trained for an EPIC task, DO NOT attempt the job. Get the EPIC trained service technician to perform the required powertrain-related maintenance.

DIAGNOSIS AND TESTING

If a replacement HVAC control head is installed, Diagnostic/Calibration and Cooldown tests will need to be performed. Once this group of tests has successfully been passed, they can be performed individually. The vehicle must be in the Ready mode during the test to provide power to the A/C compressor, the PTC heater and to assure that the actuators are calibrated correctly. The HVAC control head is capable of troubleshooting the system in approximately two to three minutes.

NOTE: The Cooldown and Diagnostic tests will only run together the first time. This is for factory to test and calibrate the vehicle as it comes of the line. The only other time this occurs is if the control head is replaced.

A/C HIGH SIDE PRESSURE TRANSDUCER

Before starting to test the transducer, ensure that the wire connector is clean of corrosion and connected properly.

(1) With gear selector in Park or Neutral and park brake set, turn the ignition key to RUN.
(2) Install scan tool.
  (a) Go to main menu.
  (b) Select HVAC.
  (c) Select sensor display.
  (d) Select A/C high side volts.

For A/C system to operate, a voltage between 0–5 volts is required. Voltages outside this range indicate a low or high pressure condition and **will not** allow the compressor to cycle.

HIGH PRESSURE TRANSDUCER	
Pressure (psi.)	**Voltage**
0 psi	0.0 V
35 psi	0.5 V
500 psi	4.7 V

A/C LOW SIDE PRESSURE TRANSDUCER

Before starting to test the transducer, ensure that the wire connector is clean of corrosion and connected properly.

(1) With gear selector in Park or Neutral and park brake set, turn the ignition key to RUN.
(2) Install scan tool.
  (a) Go to main menu.
  (b) Select HVAC.
  (c) Select sensor display.
  (d) Select A/C high side volts.

For A/C system to operate, a voltage between 0–5 volts is required. Voltages outside this range indicate a low or high pressure condition and **will not** allow the compressor to cycle.

LOW PRESSURE TRANSDUCER	
Pressure psi	**Voltage**
0 psi	0.0 V
5 psi	0.244 V
50 psi	2.44 V
100 psi	4.88 V

A/C PERFORMANCE TEST PROCEDURES

Review Safety Precautions and Warnings in this group before proceeding with this procedure. Air temperature in the test room and on the vehicle must be 21˚C (70˚F) minimum for this test. Run for five minutes then check the readings with the scan tool and compare to the A/C performance test chart. If the system fails to meet specifications, refer to the refrigerant Service Procedures for further diagnosis.

NOTE: The amount of R-134a refrigerant that the air conditioning system holds is 1.14kg. (2.5 lb).

A/C PERFORMANCE TEST

The air conditioning system is designed to remove heat and humidity from the air entering the passenger compartment. The inside coil, located in the HVAC unit, is cooled to temperatures near the freezing point. As warm damp air passes over the fins in the inside coil, moisture in the air condenses to water, dehumidifying the air. Condensation on the inside coil fins reduces the inside coil's ability to absorb heat. During periods of high heat and humidity, an air conditioning system will be less effective. With the instrument control set to RECIRC, only air from the passenger compartment passes through the inside coil. As the passenger compartment air dehumidifies, A/C performance levels rise.

A/C performance test HVAC control settings:

- A/C button depressed.
- Full RECIRC.
- PANEL.
- Temp lever to Full Cool.
- Blower on high.

AMBIENT TEMPERATURE	21˚C 70˚F	26˚C 80˚F	32˚C 90˚F	37˚C 100˚F	43˚C 110˚F
INSIDE COIL	0-6˚C 33-43˚F	0-7˚C 33-35˚F	1-8˚C 35-47˚F	3-12˚C 39-55˚F	4-15˚C 40-60˚F
COMPRESSOR DISCHARGE PRESSURE	345-690 kPa (50-100 PSI)	690-1034 kPa (100-150 PSI)	931-1482 kPa (135-215 PSI)	1207-1896 kPa (175-275 PSI)	1551-2241 kPa (225-325 PSI)
COMPRESSOR SUCTION PRESSURE	117-152 kPa (17-22 PSI)	117-165 kPa (17-24 PSI)	117-179 kPa (17-26 PSI)	117-193 kPa (17-28 PSI)	117-207 kPa (17-30 PSI)

ACTUATOR CALIBRATION

MODE, BLEND and RECIRC door calibration compensates for mechanical variations in the actuators, HVAC unit and its linkages. In–vehicle calibration can be entered from the control's front panel. If the WIPE and Electric Back Light (EBL) Light Emitting Diodes (LEDs) flash simultaneously when ignition is cycled On, the actuators have not been calibrated or a failure occurred during the previous calibration (fig. 1). Diagnostics will always occur during calibration.

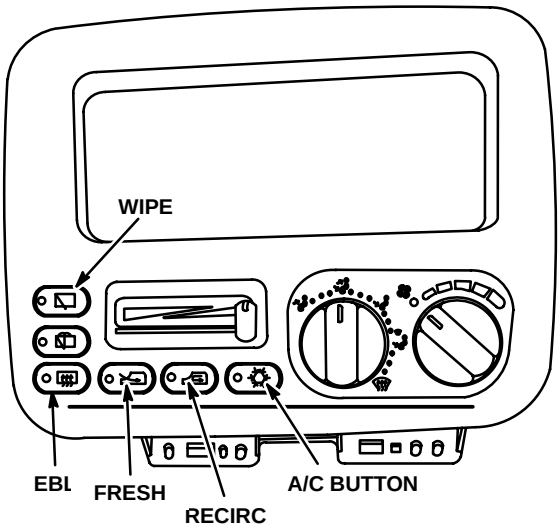

Fig. 1 HVAC Control Head

During the actuator calibration, diagnostics are performed on the actuators and fin probe thermistor. Once diagnostics are completed, if successful, the control head will return to command mode and all LEDs will be flashing. Command mode can be exited by pressing the A/C button. If a failure is detected during calibration, the respective LED will be On.

ACTUATOR CALIBRATION TEST ENTRY

TO INITIATE TESTS: Vehicle in READY mode, blower turned to high. The Actuator test is started by pressing the WASH button while in the command mode (all LEDs flashing). The command mode can be entered by pressing the WIPE and EBL buttons simultaneously.

When actuators are being calibrated, the WIPE and EBL, WIPE and FRESH or WIPE and RECIRC LEDs will be alternately flashing indicating respectively which actuator is being calibrated. Refer to the chart below.

LIGHTED LED	ACTUATOR CALIBRATING
EBL	BLEND ACTUATOR
FRESH	MODE ACTUATOR
RECIRC	RECIRCULATION ACTUATOR

If the Actuator Calibration test passes, the control head will return to the command mode (all LEDs flashing). Command mode can be exited by pressing the A/C button. If a failure occurred, the respective LED will be flashing (EBL, FRESH or RECIRC). At this point pressing and holding the respective button will cause a failure code to appear on the WIPE and A/C LEDs (the WIPE and A/C LEDs will be flashing).

A/C LED flashing: Actuator failed to drive to Cold, DEFROST or Fresh (low feedback voltage) position.

Possible causes: Feedback shorted to ground, actuator frozen in upper quarter of travel range.

WIPE LED flashing: Actuator failed to drive to Hot, Panel or RECIRC (high feedback voltage) position.

Possible causes: Feedback shorted to ground, actuator frozen in lower quarter of travel range.

A/C and WIPE LEDs flashing: Actuator failed to drive to either position.

Possible causes: Actuator frozen in middle half of actuator travel range, operator forced exit of actuator calibration.

NOTE: No calibration values are stored in EEPROM for the actuators which fail calibration. Calibration values are stored for the actuators as they successfully complete calibration.

NOTE: EXITING DURING A TEST CAN LEAVE UNIT IN AN UNCALIBRATED STATE.

BLEND/PASSENGER ACTUATOR BACKGROUND

The Blend Actuator can move the temperature door in two directions. When the voltage at C1 pin 14 of the control head is high and the voltage at C1 pin 15 is low, the door will move towards the Heat position. When C1 pin 15 is high and C1 pin 14 is low, the door will move toward the COLD position. When both pins are high or both pins are low, the actuator will not move. The Blend feedback signal is a voltage signal that is supplied by the actuator to the control head. The signal will be about 4.0 volts in the HEAT position and 1.0 volts in the COLD position. The signal is necessary for the correct positioning of the temperature door.

BLOWER MOTOR AND WHEEL ASSEMBLY

The blower speed switch supplies the blower motor with varied voltage.

CAUTION: Stay clear of the blower motor when A/C or heat is On, blower may be hot or the motor wheel may be spinning.

Refer to the Blower Motor Vibration/Noise chart in the standard NS service manual for diagnosis.

COMPRESSOR NOISE DIAGNOSIS

Excessive noise while the A/C is being used can be caused by loose mounts or high operating pressure. Verify proper refrigerant charge and head pressure before compressor repair is performed.

With the close tolerances of a compressor, it is possible to experience a temporary lockup. The longer the A/C system is inactive, the more likely the condition is to occur. This condition is the result of normal refrigerant movement within the A/C system caused by temperature changes. The refrigerant movement may wash the oil out of the compressor.

COOLDOWN TEST

The following procedure is used to run the Cooldown test from the command mode:

(1) Vehicle in READY mode.

(2) Turn the blower knob to the MAX position.

(3) Move the temperature lever to the full COLD position.

(4) Turn the MODE knob to the PANEL position.

(5) Push the full FRESH button.

(6) Press the WASH and A/C buttons simultaneously.

The WIPE and A/C LEDs will be flashing while the Cooldown test is being performed. If the Cooldown test was successful, the control head will return to the command mode. Command can then be exited by pressing the A/C button. A successful Cooldown test is determined by the following criteria:

(1) The inside coil fin thermistor drops by 11°C (20°F) in two minutes.

(2) The inside coil fin thermistor reaches minimum temperature of 7°C (45°F).

If a problem was detected during the Cooldown test, the A/C LED will be On. Pressing the A/C button once will return you to command mode. Command mode can then be exited by pressing the A/C button again. When in the command mode, each press of the FRESH button will cause a fail code to be transmitted on the CCD bus for reception by the diagnostic scan tool. If the Cooldown failed, perform these checks:

(1) Determine if the refrigerant system is operating correctly.

(a) Check the outlet air temperature.

(b) Feel the compressor suction plumbing. Is it hot?

(2) If not OK, go to Step 3. If OK, repeat the Calibration Diagnostic and Cooldown test.

(3) If system does not seem to be operating correctly, perform diagnostics for poor performance:

(a) Low refrigerant charge.

(b) No charge.

(c) Compressor not operating.

Verify that the test was done with the inside coil at room temperature. The test consists of starting the compressor and measuring the time it takes for the inside coil temperature to fall 11°C (20°F). If the compressor has been running, the inside coil is cold already and will not be capable of falling 11°C (20°F). If the test was run with a cold inside coil, turn A/C Off and turn the blower motor switch to high position for three to five minutes until the inside coil is at room temperature. Then repeat the Cooldown test.

COOLDOWN TEST (Continued)

If refrigerant system is performing properly and the system will not pass the test, repeat the Calibration Diagnostic and Cooldown test to determine if the inside coil temperature fin probe thermistor has developed an open or shorted circuit. If the HVAC control head still passes Calibration test, verify Cooldown test manually with a pocket thermometer. The outlet air temperature must drop at least 11°C (20°F) within two minutes. Ensure the inside coil is at room temperature before starting test. Check if inside coil probe will drop the temperature 11°C (20°F) in two minutes. If the fin probe is found to be faulty, check that the thermistor is positioned in the fins properly. If not, correct and repeat test. If OK, replace the fin probe. Once the repairs are completed, repeat the Calibration Diagnostic and Cooldown test. Repeating the test is necessary to clear the fault codes.

The Cooldown test can be aborted by doing one of the following:

- Press the A/C button once, this will return you to command mode. Command mode can be exited by pressing the A/C button again.
- Calibration can be exited at any time by pressing the A/C button.
- If a problem is detected during the Cooldown test, the A/C LED will be On.

EEPROM DATA

Calibration/Diagnostics, Cooldown Status and Fin Thermistor values are stored in an EEPROM memory internal to the control head. The microcomputer within the HVAC control head uses this information:

(1) To determine if Cooldown needs to run.
(2) For proper position of the Heater–A/C unit assembly doors.

NOTE: Special effort must be used to keep all R–134a system components moisture–free. Moisture in the oil is very difficult to remove and will cause a reliability problem with the compressor.

EXPANSION VALVE

The EXV is self monitoring in the service mode. Check fault codes for EXV.

HEATER PERFORMANCE TEST

The Heater Performance test is used to measure heater output. Temperature measurements for the heater performance test are read with the scan tool at the post–inside coil thermistor and ambient temperature at 21°C (70° F). To initiate the Heater Performance test, the system must be set to the following modes:

- MAX Heat.
- Full Blower.
- Full FRESH Air.
- No A/C.

After five minutes, the inside–coil thermistor should read 21°C ± 9°C (70°F ± 15°F).

MODE ACTUATOR BACKGROUND

The Mode actuator can move the mode door in two directions. When the voltage at C1 pin 18 of the control head is high and the voltage at C1 pin 14 is low, the door will move toward the PANEL position. When both pins are high or when both pins are low, the actuator will not move. The Mode door feedback signal is a voltage signal that is supplied by the actuator to the control head. The signal will be about 4.5 volts in the PANEL position and .5 volts in the DEFROST position. As the position of the Mode actuator changes, so will the feedback signal. The feedback signal is necessary for the correct positioning of the mode door.

POSSIBLE LOCATION OR CAUSE OF INSUFFICIENT HEAT

(1) Obstructed cowl air intake.
(2) Obstructed heater system outlets.
(3) Blend air door not functioning properly.
(4) System load limit.

POTENTIOMETER CALIBRATION

The following procedure is used to calibrate the potentiometers:

(1) Enter the command mode.
(2) Move the temperature lever to the full COLD position.
(3) Turn the MODE knob to the PANEL position.
(4) Turn the blower knob to the Off position.
(5) Press the WIPE button.

If successful, the WIPE LED will be flashing, indicating that all low point values were accepted and the potentiometers may be adjusted for high point calibration.

The high points are entered with the following procedure:

(1) Move the temperature lever to the full HOT position.
(2) Turn the MODE knob to the DEFROST position.
(3) Turn the blower knob to the MAX position.
(4) Press the WIPE button.

If a value was not excepted the respective LED will be On.

LIGHTED LED	ACTUATOR CALIBRATING
EBL	TEMPERATURE LEVER
FRESH	MODE KNOB
RECIRC	BLOWER KNOB

(5) Adjust the failed lever or knob indicated and press the WIPE button again.

If successful, the control head will return to the command mode indicated by all LEDs flashing.

RECIRC ACTUATOR BACKGROUND

The RECIRC Actuator can move the Recirculation door in two directions. When the voltage at C1 pin 14 of the control head is high and the voltage at C1 pin 16 is low, the door will move toward the FRESH position. When C1 pin 16 is High and C1 pin 14 is low, the door will move toward the RECIRC position. When both pins are high or both pins low, the actuator will not move. The RECIRC feedback signal is a voltage signal that is supplied by the actuator to the control head. The signal will be about 2.0 volts in the FRESH position and 4.0 volts in the RECIRC position. As the position of the RECIRC actuator changes, so will the feedback signal. The feedback signal is necessary for the correct positioning of the RECIRC door.

TEMPERATURE CONTROL

If temperature cannot be adjusted with the TEMP lever on the control panel, the following could require service:

(1) Blend air door binding.
(2) Faulty Blend air door motor.
(3) Improper PTC operation.

THIS PAGE INTENTIONALLY LEFT BLANK

DIAGNOSTIC TESTS

DIAGNOSTIC PROCEDURE	TEST
PRE–DIAGNOSTIC CHECKOUT	TEST 1
4–WAY VALVE DRIVER OPEN	TEST 2
ACTUATOR COMMON DRIVER OPEN	TEST 3
BLEND DOOR FEEDBACK	TEST 4
BLEND DRIVER OPEN	TEST 5
BLOWER DRIVER OPEN	TEST 6
BLOWER POT	REPLACE HVAC CONTROL HEAD*
COMPRESSOR THERMISTOR	TEST 7
COMPRESSOR DIAGNOSTIC FEEDBACK	TEST 8
COMPRESSOR PWM DRIVER OPEN	TEST 9
COMPRESSOR RELAY DRIVER OPEN	TEST 10
EBL DRIVER OPEN	TEST 11
EWD DRIVER OPEN	TEST 12
EXV DRIVER OPEN	TEST 13
FLOOR DUCT THERMISTOR	TEST 14
HIGH PRESS SENSE	TEST 15
IGBT SHORT DETECT	TEST 16
INSIDE COIL TEMPERATURE	TEST 17
LOW PRESSURE SENSE	TEST 18
MODE DOOR FEEDBACK	TEST 19
NO RESPONSE FROM HVAC CONTROL	TEST 20
OUTPUT SHORT TO BATTERY +	CALL EPIC HOT LINE*
PANEL THERMISTOR	TEST 21
POST – INSIDE COIL THERMISTOR	TEST 22
PRE – INSIDE THERMISTOR	TEST 23
PTC BANK 1 OPEN DETECT	TEST 24
PTC BANK 2 OPEN DETECT	TEST 25
PTC BANK 3 OPEN DETECT	TEST 26
PTC PILOT SENSE OPEN	PCA TEST 30*
RECIRC ACTUATOR FEEDBACK	TEST 27
SUCTION THERMISTOR	TEST 28
VERIFICATION TEST	TEST VER 1A

* Perform Test 1. If DTC is still present, perform indicated action.

TEST 1 – PRE–DIAGNOSTIC CHECKOUT

NOTE: Ensure that the Auxiliary Battery is properly charged to perform diagnostics.

1. Connect the Scan Tool to the Data Link Connector (DLC).

2. With the Scan Tool, read and record all diagnostic trouble codes (DTC's) from BEMS, PCA, HVAC and Power Steering. If a "No Response" from a system is present on the scan tool, refer to the Diagnosis and Testing module in the appropriate section of this service manual.

3. With the Scan Tool, erase all DTCs.

4. Road test or charge vehicle depending on complaint condition.

5. After road test or charge, read all DTCs using the Scan Tool.
   a. If no DTCs have been set, return vehicle to customer.
   b. If there are multiple modules requesting the service required lamp, perform diagnosis on DTCs by module in the following order:
      i. BEMS
      ii. PCA
      iii. HVAC
      iv. Power Steering

NOTE: If verifying HVAC DTCs, perform the following:

I. Perform actuator and potentiometer calibration tests. Refer to "Calibration Tests" in the HVAC Service Procedures module of this service manual.

II. Place HVAC system in the Service mode before reading DTCs with the scan tool.

6. If the vehicle does not start or does not charge, refer to the "Diagnosis and Testing" module in the Powertrain section of this service manual.

NOTE: If the Scan Tool screen is blank, perform the following:

I. Disconnect the scan tool from the data link connector (DLC).

II. Ensure that there is a good ground circuit at DLC cavity 4.

III. Ensure that there is a 12–volt supply at cavity 16. If there is not, inspect the IOD fuse in the PDC.

IV. Try a different scan tool cable.

V. Try a different scan tool.

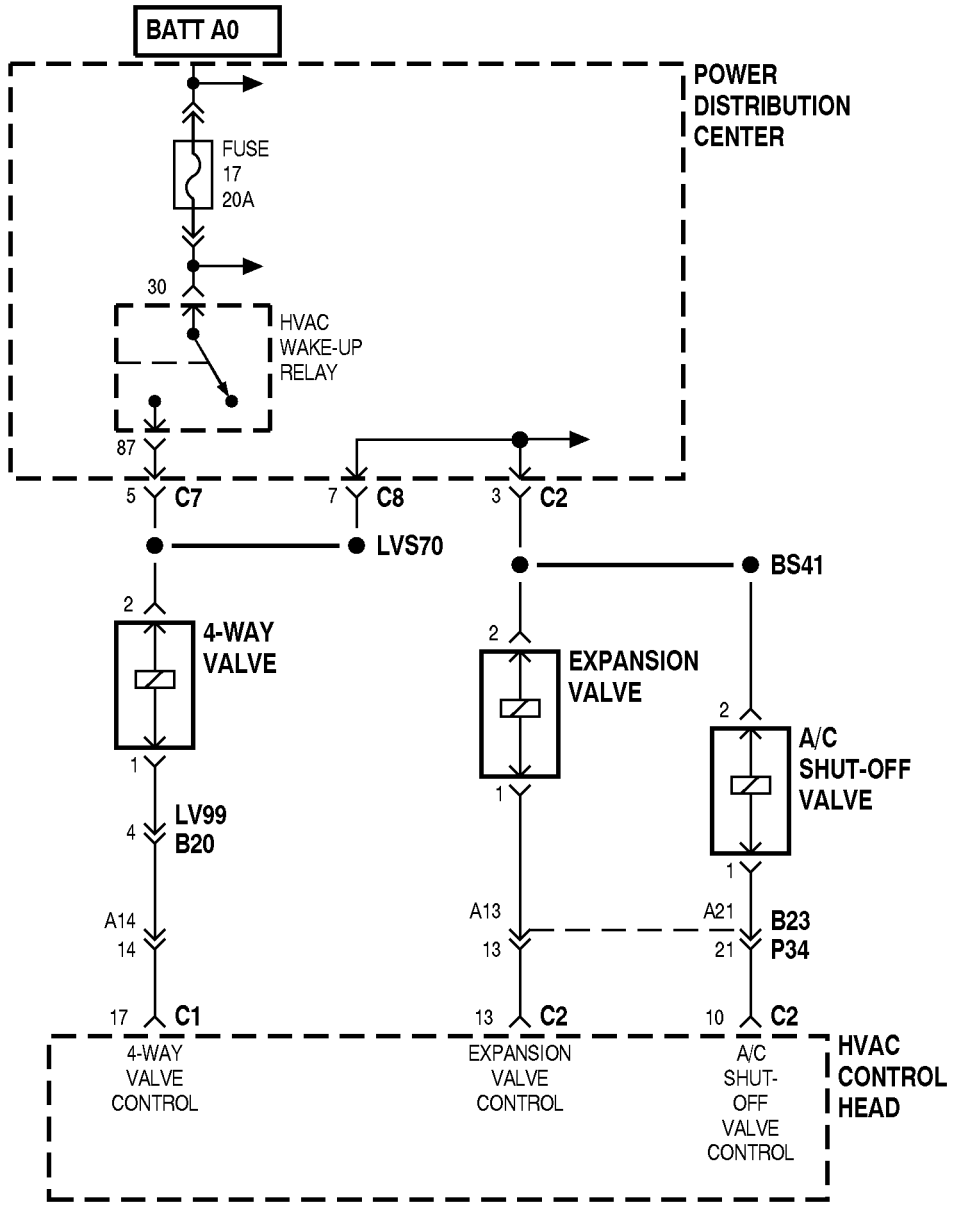

TEST 2 – 4–WAY VALVE DRIVER OPEN

Description: The 4–way valve is driven by a low voltage signal. If a short or open is detected in the line, this code will be set.

Detection: Whenever the HVAC system is in Service mode.

Related Code: Output Short to B(+)

Possible Causes:

- Short in 4–way valve driver wiring.
- Open in 4–way valve driver wiring.
- Shorted driver.

TEST 2 – 4 WAY VALVE DRIVER OPEN

STEP	ACTION	YES	NO
1	HAS TEST 1 BEEN COMPLETED?	GO TO STEP 2.	PERFORM TEST 1.
2	DISCONNECT 4 WAY VALVE CONNECTOR.** TURN KEY ON. USING A VOLTMETER, PROBE BETWEEN PIN 2 AND CHASSIS GROUND. **4 WAY VALVE** CAV / COLOR / FUNCTION 1 / LB/RD / 4-WAY VALVE CONTROL 2 / BR / HVAC WAKE–UP RELAY OUTPUT 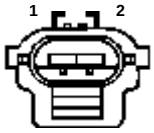 IS 12V PRESENT?	GO TO STEP 3.	GO TO STEP 5.
3	REMOVE HVAC CONTROL HEAD. DISCONNECT HVAC CONTROL HEAD CONNECTOR – C1.** USING AN OHMMETER, PROBE BETWEEN HVAC CONTROL HEAD CONNECTOR C1 PIN 17 AND CHASSIS GROUND. **HVAC CONTROL HEAD – C1** CAV / COLOR / FUNCTION 17 / LB/RD / 4 WAY VALVE CONTROL 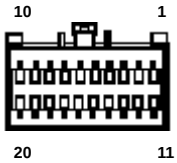 IS CONTINUITY PRESENT?	REPAIR SHORT IN CIRCUIT.*	GO TO STEP 4.
4	USING AN OHMMETER, PROBE BETWEEN 4 WAY VALVE CONNECTOR PIN 1 AND HVAC CONTROL HEAD – C1 PIN 17. **4 WAY VALVE CONNECTOR** CAV / COLOR / FUNCTION 1 / LB/RD / 4-WAY VALVE CONTROL 2 / BR / HVAC WAKE–UP RELAY OUTPUT 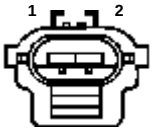 IS CONTINUITY PRESENT?	GO TO STEP 5.	REPAIR OPEN IN CIRCUIT.*
5	RECONNECT HVAC CONTROL HEAD. USING AN OHMMETER, PROBE BETWEEN HVAC CONTROL HEAD – C1 PIN 17 AND CHASSIS GROUND. USING SCAN TOOL, ACTUATE 4 WAY VALVE. IS CONTINUITY PRESENT DURING ACTUATION?	REPLACE 4 WAY VALVE.*	REPLACE HVAC CONTROL HEAD.*
6	VERIFY CONDITION OF FUSE 17 IN THE POWER DISTRIBUTION CENTER. IS FUSE BLOWN?	GO TO STEP 7.	REPAIR OPEN IN CIRCUIT.*
7	USING AN OHMMETER, PROBE BETWEEN 4 WAY VALVE CONNECTOR PIN 2 AND CHASSIS GROUND. IS CONTINUITY PRESENT?	REPAIR SHORT IN CIRCUIT.*	REPLACE 4 WAY VALVE.*

***Perform Verification TEST VER-1A. **Check connectors - Clean/repair as necessary.**

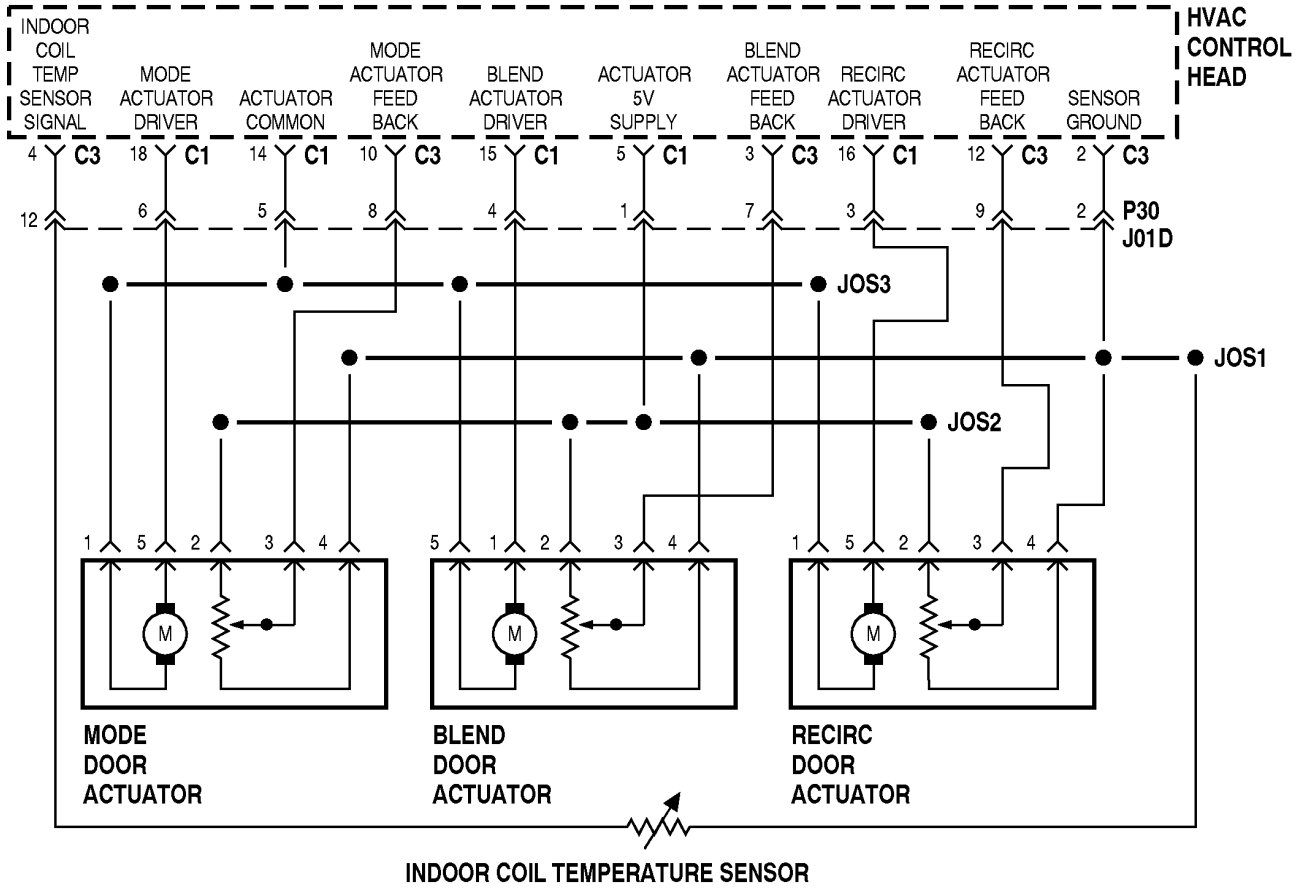

TEST 3 – ACTUATOR COMMON DRIVER OPEN

Description: The Actuator Common Signal is used to position the HVAC actuators.

Detection: Whenever the HVAC system is in Service mode.

Possible Causes:

- Short in Actuator Common driver wiring.
- Open in Actuator Common driver wiring.
- Shorted driver.

TEST 3 – ACTUATOR COMMON DRIVER OPEN

STEP	ACTION	YES	NO
1	HAS TEST 1 BEEN COMPLETED?	GO TO STEP 2.	PERFORM TEST 1.
2	REMOVE HVAC CONTROL HEAD, BUT DO NOT DISCONNECT.** TURN KEY ON. TURN BLOWER ON. MOVE TEMPERATURE LEVER TO FULL HOT POSITION. USING A VOLTMETER, BACKPROBE BETWEEN CONNECTOR C1 PIN 15 (+) AND PIN 14 (−). **HVAC CONTROL HEAD – C1** CAV / COLOR / FUNCTION 14 / DB/WT / ACTUATOR COMMON 15 / DB/RD / BLEND AIR ACTUATOR DRIVER 16 / GY/DB / RECIRCULATION ACTUATOR DRIVER 17 / LB/RD / 4 WAY VALVE CONTROL 18 / DG/YL / MODE ACTUATOR DRIVER 10 1 20 11 IS VOLTAGE APPROXIMATELY 0.0−1.5 VOLTS?	GO TO STEP 3.	REPLACE CONTROL HEAD.*
3	WHILE WATCHING METER, MOVE TEMPERATURE LEVER TO FULL COLD POSITION. AS LEVER REACHES FULL COLD, IS VOLTAGE APPROXIMATELY 12 VOLTS?	GO TO STEP 4.	REPLACE CONTROL HEAD.*
4	DISCONNECT HVAC CONTROL HEAD C1.** DISCONNECT INLINE CONNECTOR P30 / J01D.** USING AN OHMMETER, CHECK FOR AN OPEN AND A SHORT TO GROUND BETWEEN INLINE CONNECTOR P30 PIN 5 AND HVAC CONTROL HEAD – C1 PIN 14. **P30 / J01D** CAV / COLOR / FUNCTION 5 / DB/WT / ACTUATOR COMMON 7 1 14 8 P30 1 7 8 14 J01D IS AN OPEN OR A SHORT TO GROUND PRESENT?	LOCATE AND REPAIR FAULT IN ACTUATOR COMMON CIRCUIT BETWEEN P30 AND THE HVAC CONTROL HEAD.*	GO TO STEP 5.
5	DISCONNECT THE MODE DOOR ACTUATOR CONNECTOR.** USING AN OHMMETER, CHECK FOR CONTINUITY AND A SHORT TO GROUND BETWEEN INLINE CONNECTOR J01D PIN 5 AND MODE ACTUATOR CONNECTOR PIN 1. **MODE ACTUATOR CONNECTOR** CAV / COLOR / FUNCTION 1 / DB/WT / ACTUATOR COMMON 2 / PK/DB / ACTUATOR 5V SUPPLY 3 / YL / MODE ACTUATOR FEEDBACK 4 / DB/GY / SENSOR GROUND 5 / DG/YL / MODE ACTUATOR DRIVER 5 1 IS AN OPEN OR A SHORT TO GROUND PRESENT?	LOCATE AND REPAIR FAULT IN ACTUATOR COMMON CIRCUIT BETWEEN J01D AND THE MODE DOOR ACTUATOR.*	GO TO STEP 6.
6	USING AN OHMMETER, CHECK FOR A SHORT TO GROUND BETWEEN MODE DOOR ACTUATOR PINS 1 AND 5. IS A SHORT TO GROUND PRESENT?	REPLACE MODE DOOR ACTUATOR.*	GO TO STEP 7.

***Perform Verification TEST VER-1A. **Check connectors - Clean/repair as necessary.**

TEST 3 – ACTUATOR COMMON DRIVER OPEN

STEP	ACTION	YES	NO
7	DISCONNECT THE BLEND DOOR ACTUATOR CONNECTOR.** USING AN OHMMETER, CHECK FOR AN OPEN AND A SHORT TO GROUND BETWEEN INLINE CONNECTOR J01D PIN 5 AND BLEND ACTUATOR CONNECTOR PIN 5. 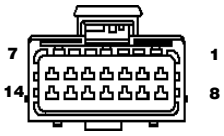 P30 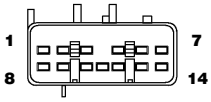 J01D 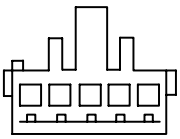 P30 / J01D CAV: 5 — COLOR: DB/WT — FUNCTION: ACTUATOR COMMON BLEND ACTUATOR CONNECTOR CAV 1 — DB/RD — BLEND ACTUATOR DRIVER CAV 2 — PK/DB — ACTUATOR 5V SUPPLY CAV 3 — RD/WT — BLEND ACTUATOR FEEDBACK CAV 4 — DB/GY — SENSOR GROUND CAV 5 — DB/WT — ACTUATOR COMMON IS AN OPEN OR A SHORT TO GROUND PRESENT?	LOCATE AND REPAIR FAULT IN ACTUATOR COMMON CIRCUIT BETWEEN J01D AND THE BLEND DOOR ACTUATOR.*	GO TO STEP 8.
8	USING AN OHMMETER, CHECK FOR A SHORT TO GROUND BETWEEN BLEND DOOR ACTUATOR PINS 1 AND 5. IS A SHORT TO GROUND PRESENT?	REPLACE BLEND DOOR ACTUATOR.*	GO TO STEP 9.
9	DISCONNECT THE RECIRC DOOR ACTUATOR CONNECTOR.** USING AN OHMMETER, CHECK FOR AN OPEN AND A SHORT TO GROUND BETWEEN INLINE CONNECTOR J01D PIN 5 AND RECIRC ACTUATOR CONNECTOR PIN 1. RECIRC ACTUATOR CONNECTOR CAV 1 — DB/WT — ACTUATOR COMMON CAV 2 — PK/DB — ACTUATOR 5V SUPPLY CAV 3 — GY — RECIRC ACTUATOR FEEDBACK CAV 4 — DB/GY — SENSOR GROUND CAV 5 — GY/DB — RECIRC ACTUATOR DRIVER 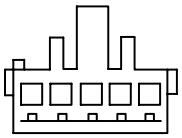 IS AN OPEN OR A SHORT TO GROUND PRESENT?	LOCATE AND REPAIR FAULT IN ACTUATOR COMMON CIRCUIT BETWEEN J01D AND THE RECIRC DOOR ACTUATOR.*	GO TO STEP 10.
10	USING AN OHMMETER, CHECK FOR A SHORT TO GROUND BETWEEN RECIRC DOOR ACTUATOR PINS 1 AND 5. IS A SHORT TO GROUND PRESENT?	REPLACE RECIRC DOOR ACTUATOR.*	REPLACE HVAC CONTROL HEAD.*

***Perform Verification TEST VER-1A. **Check connectors - Clean/repair as necessary.**

THIS PAGE INTENTIONALLY LEFT BLANK

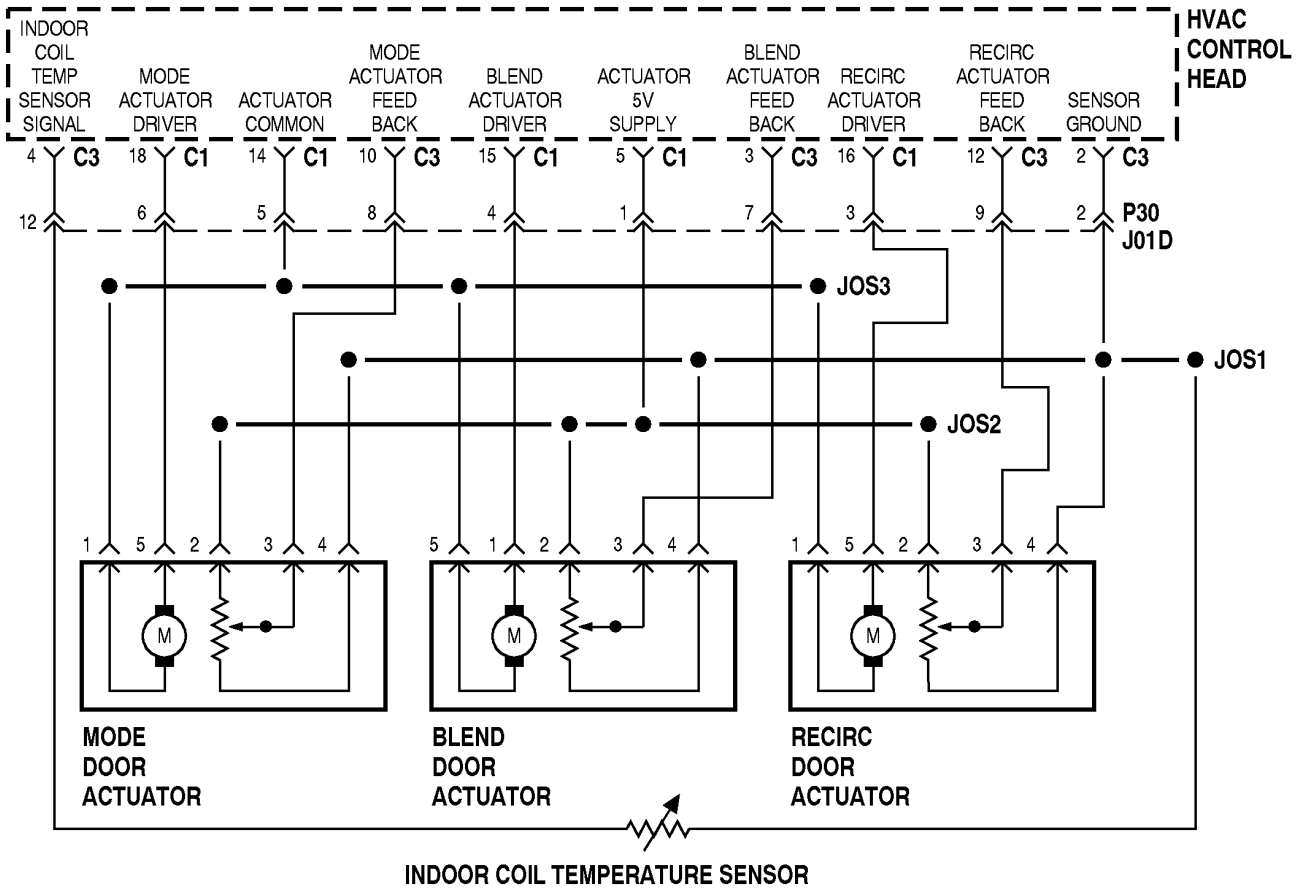

TEST 4 – BLEND DOOR FEEDBACK

Description: The Blend Door feedback is used to determine the Blend Door position. The feedback voltage increases as the Blend Door moves from full Cold to the full Hot position. If this code sets, the system will drive to Defrost, full Heat, and Fresh air.

Detection: Whenever the vehicle is in Ready mode.

Possible Causes:

- Faulty Blend Door actuator.
- Open in Blend Door actuator feedback wiring.
- Short in Blend Door actuator feedback wiring.

TEST 4 – BLEND DOOR FEEDBACK

STEP	ACTION	YES	NO
1	HAS TEST 1 BEEN COMPLETED?	GO TO STEP 2.	PERFORM TEST 1.
2	REMOVE HVAC CONTROL HEAD, BUT DO NOT DISCONNECT.** PLACE VEHICLE IN READY MODE. USING A VOLTMETER, BACKPROBE BETWEEN HVAC CONTROL HEAD CONNECTOR – C3 PIN 3 AND CHASSIS GROUND. HVAC CONTROL HEAD – C3 CAV: 3 / COLOR: RD/WT / FUNCTION: BLEND AIR ACTUATOR FEEDBACK 6 1 12 7 IS THE VOLTAGE BETWEEN APPROXIMATELY 0.8 TO 2.0V?	GO TO STEP 3.	GO TO STEP 4.
3	WHILE READING THE VOLTMETER, MOVE THE TEMPERATURE LEVER FROM FULL COLD POSITION TO FULL HOT POSITION. DOES THE VOLTAGE INCREASE TO APPROXIMATELY 3.5 TO 4.5 VOLTS?	REPLACE BLEND DOOR ACTUATOR.*	GO TO STEP 4.
4	DISCONNECT INLINE CONNECTOR P30 / J01D.** P30 / J01D CAV: 7 / COLOR: RD/WT / FUNCTION: BLEND AIR ACTUATOR FEEDBACK 7 1 14 8 P30 1 7 8 14 J01D USING AN OHMMETER, MEASURE THE RESISTANCE BETWEEN HVAC CONTROL HEAD CONNECTOR – C3 PIN 3 AND INLINE CONNECTOR P30 PIN 7. IS THE RESISTANCE GREATER THAN 10.0 OHMS?	REPAIR OPEN IN THE BLEND DOOR FEEDBACK CIRCUIT.*	GO TO STEP 5.
5	USING AN OHMMETER, MEASURE THE RESISTANCE BETWEEN INLINE CONNECTOR P30 PIN 7 AND GROUND AND BETWEEN INLINE CONNECTOR J01D PIN 7 AND GROUND. IS THE RESISTANCE LESS THAN 5.0 OHMS?	REPAIR SHORT TO GROUND IN THE BLEND DOOR FEEDBACK CIRCUIT.*	GO TO STEP 6.
6	USING AN OHMMETER, MEASURE THE RESISTANCE BETWEEN BLEND DOOR ACTUATOR PIN 3 AND INLINE CONNECTOR J01D PIN 7. BLEND ACTUATOR CONNECTOR 1 DB/RD BLEND AIR ACTUATOR DRIVER 2 PK/DB ACTUATOR 5V SUPPLY 3 RD/WT BLEND AIR ACTUATOR FEEDBACK 4 DB/GY SENSOR GROUND 5 DB/WT ACTUATOR COMMON 5 1 IS THE RESISTANCE GREATER THAN 10.0 OHMS?	REPAIR OPEN IN THE BLEND DOOR FEEDBACK CIRCUIT.*	GO TO STEP 7.
7	USING AN OHMMETER, MEASURE THE RESISTANCE BETWEEN BLEND DOOR ACTUATOR PIN 3 AND GROUND. IS THE RESISTANCE LESS THAN 5.0 OHMS?	REPAIR SHORT TO GROUND IN THE BLEND DOOR FEEDBACK CIRCUIT.*	GO TO STEP 8.

***Perform Verification TEST VER-1A. **Check connectors - Clean/repair as necessary.**

TEST 4 – BLEND DOOR FEEDBACK

STEP	ACTION	YES	NO
8	USING THE SCAN TOOL, PERFORM ACTUATOR CALIBRATION TEST. DOES THE TEST PASS?	CALL EPIC HOT LINE.*	REPLACE HVAC CONTROL HEAD.*

***Perform Verification TEST VER-1A. **Check connectors - Clean/repair as necessary.**

THIS PAGE INTENTIONALLY LEFT BLANK

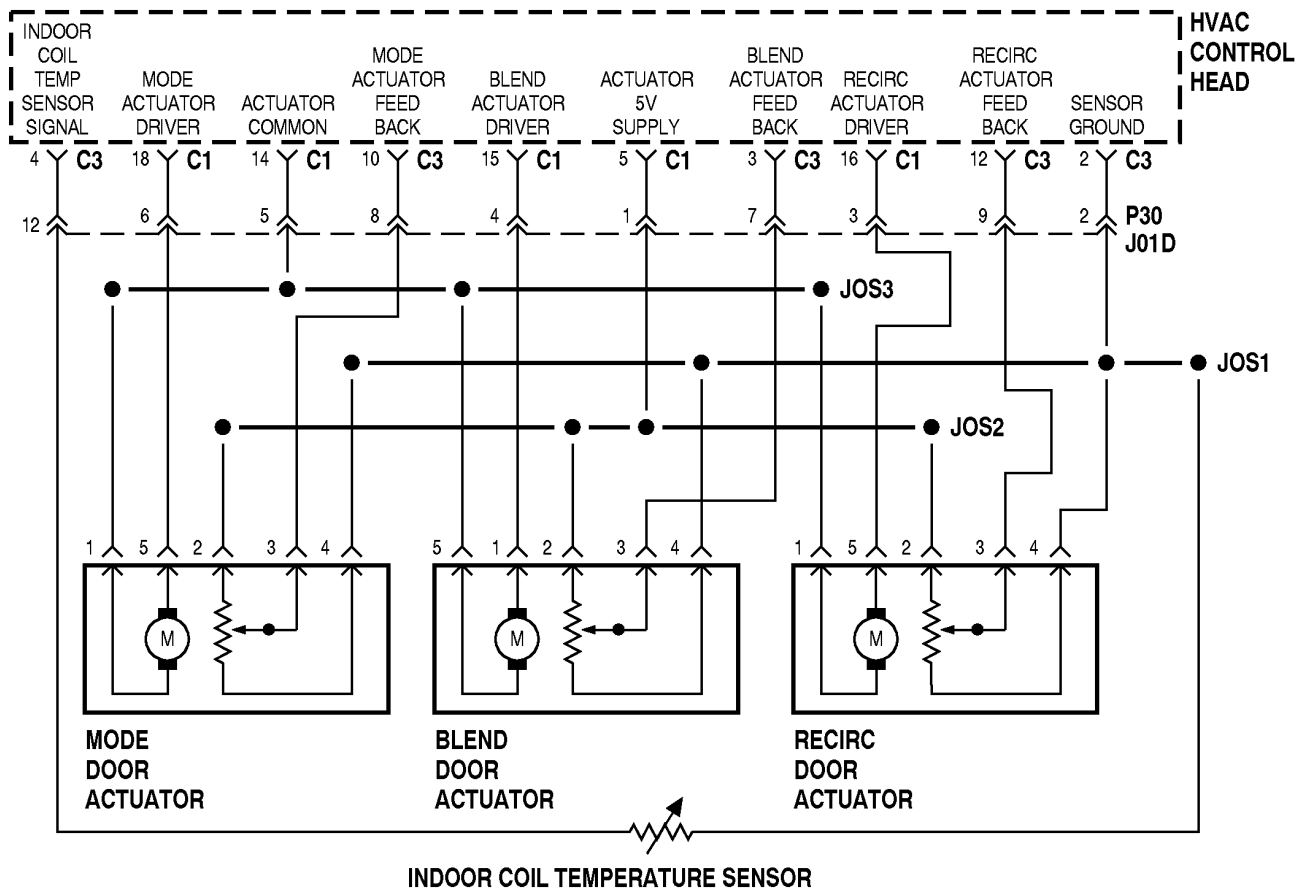

TEST 5 – BLEND DRIVER OPEN

Description: The Blend driver signal is used to position the Blend actuator.

Detection: Whenever the HVAC system is in Service mode.

Related Code: Output Short to B(+)

Possible Causes:

- Short in Blend driver wiring.
- Open in Blend driver wiring.
- Shorted driver.

TEST 5 – BLEND DRIVER OPEN

STEP	ACTION	YES	NO
1	HAS TEST 1 BEEN COMPLETED?	GO TO STEP 2.	PERFORM TEST 1.
2	REMOVE HVAC CONTROL HEAD, BUT DO NOT DISCONNECT.** TURN KEY ON. TURN BLOWER ON. MOVE TEMPERATURE LEVER TO FULL HOT POSITION. USING A VOLTMETER, BACKPROBE BETWEEN CONNECTOR C1 PIN 15 (+) AND PIN 14 (–). **HVAC CONTROL HEAD – C1** CAV / COLOR / FUNCTION 14 / DB/WT / ACTUATOR COMMON 15 / DB/RD / BLEND AIR ACTUATOR DRIVER 16 / GY/DB / RECIRCULATION ACTUATOR DRIVER 17 / LB/RD / 4 WAY VALVE CONTROL 18 / DG/YL / MODE ACTUATOR DRIVER 10 1 20 11 IS VOLTAGE APPROXIMATELY 0.0–1.5 VOLTS?	GO TO STEP 3.	REPLACE CONTROL HEAD.*
3	WHILE WATCHING METER, MOVE TEMPERATURE LEVER TO FULL COLD POSITION. AS LEVER REACHES FULL COLD, IS VOLTAGE APPROXIMATELY 12 VOLTS?	GO TO STEP 4.	REPLACE CONTROL HEAD.*
4	DISCONNECT BLEND ACTUATOR CONNECTOR.** MOVE TEMPERATURE LEVER TO FULL HOT POSITION. USING A VOLTMETER, PROBE BETWEEN ACTUATOR CONNECTORS PIN 1 (+) AND PIN 5(–). **BLEND ACTUATOR CONNECTOR** CAV / COLOR / FUNCTION 1 / DB/RD / BLEND AIR ACTUATOR DRIVER 2 / PK/DB / ACTUATOR 5V SUPPLY 3 / RD/WT / BLEND AIR ACTUATOR FEEDBACK 4 / DB/GY / SENSOR GROUND 5 / DB/WT / ACTUATOR COMMON 5 1 IS VOLTAGE APPROXIMATELY 0.0–1.5 VOLTS?	GO TO STEP 5.	LOCATE AND REPAIR SHORT IN ACTUATOR DRIVE OR COMMON CIRCUIT.*
5	WHILE WATCHING METER, MOVE TEMPERATURE LEVER TO FULL COLD POSITION. DOES VOLTAGE CHANGE FROM APPROXIMATELY 0.0–1.5 TO APPROXIMATELY 12 VOLTS?	REPLACE BLEND ACTUATOR.*	LOCATE AND REPAIR SHORT IN ACTUATOR DRIVE OR COMMON CIRCUIT.*

***Perform Verification TEST VER-1A. **Check connectors - Clean/repair as necessary.**

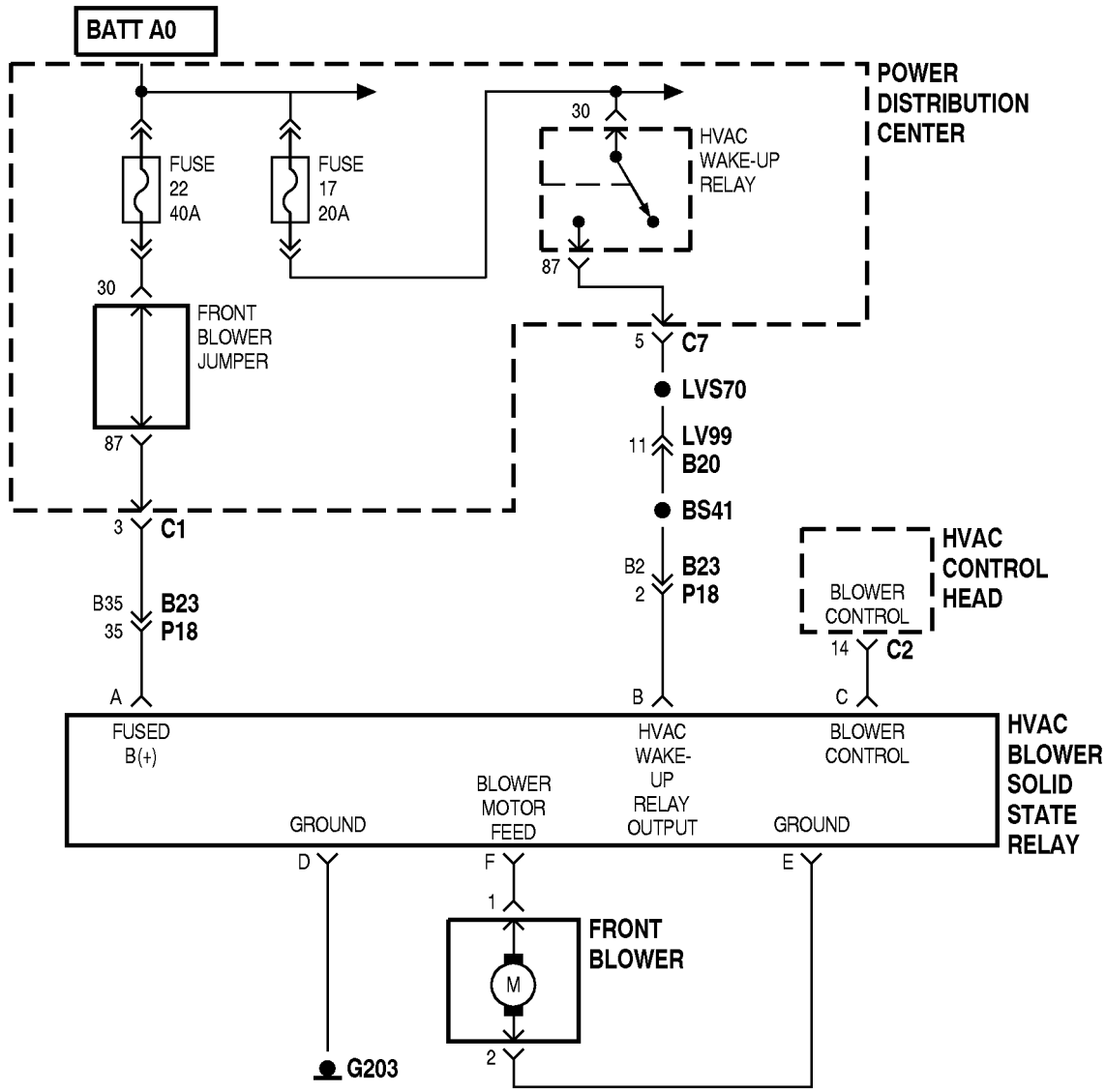

TEST 6 – BLOWER DRIVER OPEN

Description: The Blower is driven by a Pulse Width Modulation (PWM) signal. If a short or open is detected in the line, this code will be set.

Detection: Whenever the HVAC system is in Service mode.

Related Code: Output Short to B(+)

Possible Causes:

- Short in Blower PWM wiring.
- Open in Blower PWM wiring.
- Shorted driver.

TEST 6 – BLOWER DRIVER OPEN

STEP	ACTION	YES	NO
1	HAS TEST 1 BEEN COMPLETED?	GO TO STEP 2.	PERFORM TEST 1.
2	DOES BLOWER RUN CONTINUOUSLY?	REPLACE SOLID STATE RELAY.*	GO TO STEP 3.
3	REMOVE HVAC CONTROL HEAD, BUT DO NOT DISCONNECT.** TURN KEY TO ON. TURN BLOWER ON. USING AN OSCILLOSCOPE OR METER (FLUKE 80 SERIES OR EQUIVALENT), BACKPROBE BETWEEN HVAC CONTROL HEAD – C2 PIN 14 AND C2 PIN 1 FOR 50HZ PWM SIGNAL. **HVAC CONTROL HEAD - C2** CAV / COLOR / FUNCTION 1 / BR / HVAC WAKE–UP RELAY OUTPUT 13 / TN / EXPANSION VALVE CONTROL 14 / YL/BR / BLOWER MOTOR SIGNAL 15 / LB / A/C COMPRESSOR DUTY CYCLE REQUEST SIGNAL 16 / DB / A/C COMPRESSOR SIGNAL 8 1 16 9 IS 50 HZ PWM SIGNAL PRESENT?	GO TO STEP 4.	REPLACE HVAC CONTROL HEAD.*
4	USING A VOLTMETER, PROBE BETWEEN HVAC SOLID STATE BLOWER RELAY PINS B AND D. IS 12V PRESENT?	GO TO STEP 8.	GO TO STEP 5.
5	USING A VOLTMETER, PROBE BETWEEN RELAY CONNECTOR PINS B AND A KNOWN GOOD GROUND. IS 12V PRESENT?	REPAIR OPEN IN GROUND CIRCUIT.*	GO TO STEP 6.
6	VERIFY CONDITION OF FUSE 17 IN THE POWER DISTRIBUTION CENTER. IS FUSE BLOWN?	GO TO STEP 7.	REPAIR OPEN IN HVAC WAKE–UP RELAY CIRCUIT.*
7	DISCONNECT HVAC BLOWER SOLID STATE RELAY CONNECTOR.** USING AN OHMMETER, PROBE FROM HVAC BLOWER SOLID STATE RELAY CONNECTOR PIN B TO CHASSIS GROUND. **HVAC BLOWER SOLID STATE RELAY** CAV / COLOR / FUNCTION A / DB / HVAC BLOWER MOTOR RELAY OUTPUT B / BR / HVAC WAKE–UP RELAY OUTPUT C / YL/BR / BLOWER CONTROL D / BK / GROUND E / BK / GROUND F / DB / BLOWER MOTOR FEED F A IS CONTINUITY PRESENT?	REPAIR SHORT IN HVAC WAKE–UP RELAY CIRCUIT.*	REPLACE HVAC BLOWER SOLID STATE RELAY. *
8	DISCONNECT HVAC BLOWER SOLID STATE RELAY CONNECTOR.** USING A VOLTMETER, PROBE BETWEEN HVAC SOLID STATE BLOWER RELAY PINS F AND D. IS 12V PRESENT?	GO TO STEP 11.	GO TO STEP 9.
9	VERIFY CONDITION OF FUSE 22 IN PDC. IS FUSE BLOWN?	GO TO STEP 10.	REPAIR OPEN IN HVAC BLOWER SOLID STATE RELAY BATTERY CIRCUIT.*

***Perform Verification TEST VER-1A. **Check connectors - Clean/repair as necessary.**

TEST 6 – BLOWER DRIVER OPEN

STEP	ACTION	YES	NO
10	DISCONNECT HVAC BLOWER SOLID STATE RELAY CONNECTOR.** USING AN OHMMETER, PROBE FROM HVAC BLOWER SOLID STATE RELAY CONNECTOR PIN F TO CHASSIS GROUND. HVAC BLOWER SOLID STATE RELAY CAV / COLOR / FUNCTION A / DB / HVAC BLOWER MOTOR RELAY OUTPUT B / BR / HVAC WAKE–UP RELAY OUTPUT C / YL/BR / BLOWER CONTROL D / BK / GROUND E / BK / GROUND F / DB / BLOWER MOTOR FEED F A IS CONTINUITY PRESENT?	REPAIR SHORT IN HVAC BLOWER SOLID STATE RELAY BATTERY CIRCUIT.*	REPLACE HVAC BLOWER SOLID STATE RELAY.*
11	USING AN OSCILLOSCOPE OR METER (FLUKE 80 SERIES OR EQUIVALENT), PROBE BETWEEN HVAC BLOWER SOLID STATE RELAY CONNECTOR PINS C AND F FOR 50 HZ PWM SIGNAL. IS 50 HZ PWM SIGNAL PRESENT?	GO TO STEP 12.	REPAIR OPEN IN CIRCUIT BETWEEN HVAC CONTROL HEAD AND HVAC BLOWER SOLID STATE RELAY.*
12	USING AN OSCILLOSCOPE OR METER (FLUKE 80 SERIES OR EQUIVALENT), BACKPROBE BETWEEN SOLID STATE RELAY CONNECTOR PINS A AND E. IS A 50 HZ PWM SIGNAL PRESENT?	GO TO STEP 13.	REPLACE HVAC BLOWER SOLID STATE RELAY.*
13	DISCONNECT HVAC BLOWER MOTOR CONNECTOR.** USING AN OSCILLOSCOPE OR METER (FLUKE 80 SERIES OR EQUIVALENT), PROBE BETWEEN HVAC BLOWER CONNECTOR PINS 1 AND 2. IS A 50 HZ PWM SIGNAL PRESENT?	REPLACE HVAC BLOWER MOTOR.*	GO TO STEP 14.
14	USING AN OSCILLOSCOPE OR METER (FLUKE 80 SERIES OR EQUIVALENT), PROBE BETWEEN HVAC BLOWER CONNECTOR PINS 1 AND CHASSIS GROUND. IS A 50 HZ PWM SIGNAL PRESENT?	REPAIR OPEN IN GROUND CIRCUIT.*	REPAIR OPEN IN FEED CIRCUIT.*

***Perform Verification TEST VER-1A. **Check connectors - Clean/repair as necessary.**

THIS PAGE INTENTIONALLY LEFT BLANK

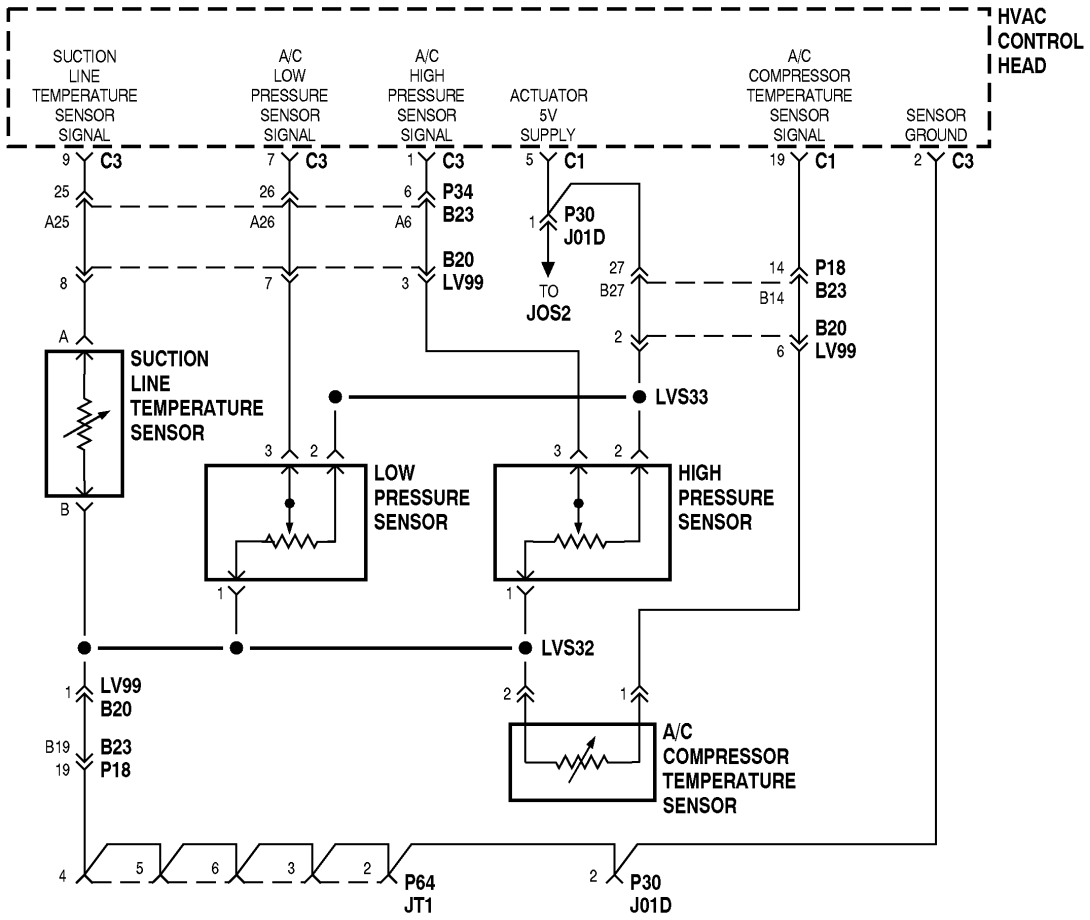

TEST 7 – COMPRESSOR THERMISTOR

Description: The HVAC control head uses this thermistor to monitor the temperature of the A/C compressor. When the temperature of the A/C compressor is above 176°F, the HVAC control head will shut off the compressor. This code sets when the compressor thermistor is out of range.

Detection: Whenever the vehicle is in Ready mode.

Possible Causes:

- Faulty A/C compressor Temperature Sensor.
- Short in A/C compressor Temperature Sensor wiring.
- Open in A/C compressor Temperature Sensor wiring.

Temp. (°F)	Temp. (°C)	Nominal Resistance (kΩ)
32	0	112
50	10	68.2
68	20	40.5
86	30	25.5
104	40	16.6

Temp. (°F)	Temp. (°C)	Nominal Resistance (kΩ)
122	50	11.1
158	70	5.3
176	80	3.8
194	90	2.7
140	60	7.6

TABLE 1 – COMPRESSOR THERMISTOR

TEST 7 – COMPRESSOR THERMISTOR

STEP	ACTION	YES	NO
1	HAS TEST 1 BEEN COMPLETED?	GO TO STEP 2.	PERFORM TEST 1.
2	REMOVE HVAC CONTROL HEAD. DISCONNECT HVAC CONTROL HEAD – C1 AND C3 CONNECTORS.** USING AN OHMMETER MEASURE THE RESISTANCE BETWEEN C1 PIN 19 AND C3 PIN 2. COMPARE RESULTS WITH THE TABLE ON THE PREVIOUS PAGE. **HVAC CONTROL HEAD – C1** CAV: 19 – COLOR: LG – FUNCTION: A/C COMPRESSOR TEMPERATURE SENSOR SIGNAL **HVAC CONTROL HEAD – C3** CAV: 2 – COLOR: DB/GY – FUNCTION: SENSOR GROUND IS THE RESISTANCE WITHIN RANGE?	REPLACE HVAC CONTROL HEAD.*	GO TO STEP 3.
3	REMOVE A/C COMPRESSOR LOW VOLTAGE CONNECTOR LV94.** USING AN OHMMETER MEASURE THE RESISTANCE BETWEEN PIN 1 AND PIN 2. COMPARE RESULTS WITH THE TABLE ON THE PREVIOUS PAGE. **A/C COMPRESSOR TEMPERATURE SENSOR** CAV: 1 – COLOR: LG – FUNCTION: A/C COMPRESSOR TEMPERATURE SENSOR SIGNAL CAV: 2 – COLOR: DB/GY – FUNCTION: SENSOR GROUND IS THE RESISTANCE WITHIN RANGE?	REPAIR WIRING BETWEEN A/C COMPRESSOR TEMPERATURE SENSOR AND HVAC CONTROL HEAD.*	REPLACE A/C TEMPERATURE SENSOR COMPRESSOR.*

***Perform Verification TEST VER-1A. **Check connectors - Clean/repair as necessary.**

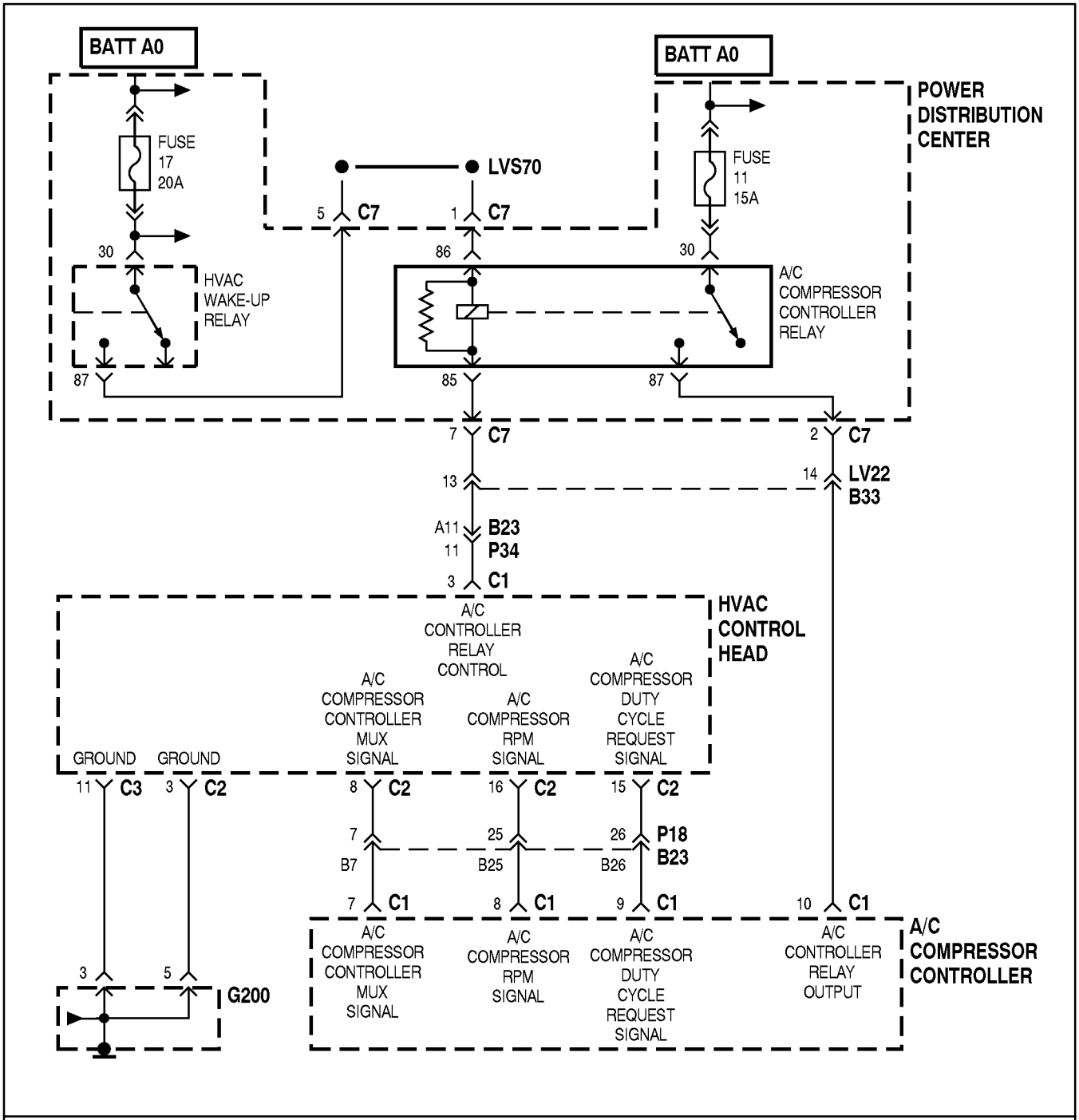

TEST 8 – COMPRESSOR DIAGNOSTIC FEEDBACK

Description: The compressor current/diagnostic signal is used to communicate diagnostic information to the HVAC control head when the compressor is not running, and as a current feedback signal when the compressor is running. If this code sets, the compressor will be disabled.

Detection: Whenever the vehicle is in Ready mode.

Possible Causes:

- Faulty compressor controller.
- Short in compressor controller wiring.
- Open in compressor controller wiring.

TEST 8 – COMPRESSOR DIAGNOSTIC FEEDBACK

STEP	ACTION	YES	NO
1	HAS TEST 1 BEEN COMPLETED?	GO TO STEP 2.	PERFORM TEST 1.
2	DISCONNECT COMPRESSOR CONTROLLER CONNECTOR – C1.** USING A VOLTMETER, PROBE BETWEEN C1 PIN 10 AND CHASSIS GROUND FOR SHORT. **A/C COMPRESSOR CONTROLLER - C1** CAV: 7 — COLOR: YL — FUNCTION: A/C COMPRESSOR CONTROLLER MUX SIGNAL CAV: 10 — COLOR: VT — FUNCTION: A/C CONTROL RELAY OUTPUT 5 1 / 10 6 IS 12V PRESENT?	REPAIR CIRCUIT AS NECESSARY.*	GO TO STEP 3.
3	REMOVE HVAC CONTROL HEAD, BUT DO NOT DISCONNECT.** PLACE VEHICLE IN READY MODE. TURN BLOWER AND A/C ON. USING AN OSCILLOSCOPE OR METER (FLUKE 80 SERIES OR EQUIVALENT), BACKPROBE BETWEEN CONTROL HEAD – C2 PIN 8 AND C2 PIN 5. **HVAC CONTROL HEAD - C2** CAV: 2 — COLOR: BK/PK — FUNCTION: IGBT SENSE IGBT CAV: 5 — COLOR: BK — FUNCTION: GROUND CAV: 8 — COLOR: YL — FUNCTION: A/C COMPRESSOR CONTROLLER MUX SIGNAL 8 1 / 16 9 DOES THE SYSTEM SHOW OF 10%–90% DUTY CYCLE?	REPLACE CONTROL HEAD.*	GO TO STEP 4.
4	DISCONNECT HVAC CONTROL HEAD C2.** DISCONNECT COMPRESSOR CONTROLLER CONNECTOR – C1 PIN 7.** PROBE FROM CONTROL HEAD – C2 PIN 8 TO COMPRESSOR CONTROLLER – C1 PIN 7 FOR OPEN OR SHORT. **COMPRESSOR CONTROLLER - C1** CAV: 7 — COLOR: YL — FUNCTION: A/C COMPRESSOR CONTROLLER MUX SIGNAL CAV: 10 — COLOR: VT — FUNCTION: A/C CONTROL RELAY OUTPUT 5 1 / 10 6 IS CIRCUIT OPEN OR SHORTED TO GROUND?	REPAIR CIRCUIT AS NECESSARY.*	REPLACE COMPRESSOR CONTROLLER.*

***Perform Verification TEST VER-1A. **Check connectors - Clean/repair as necessary.**

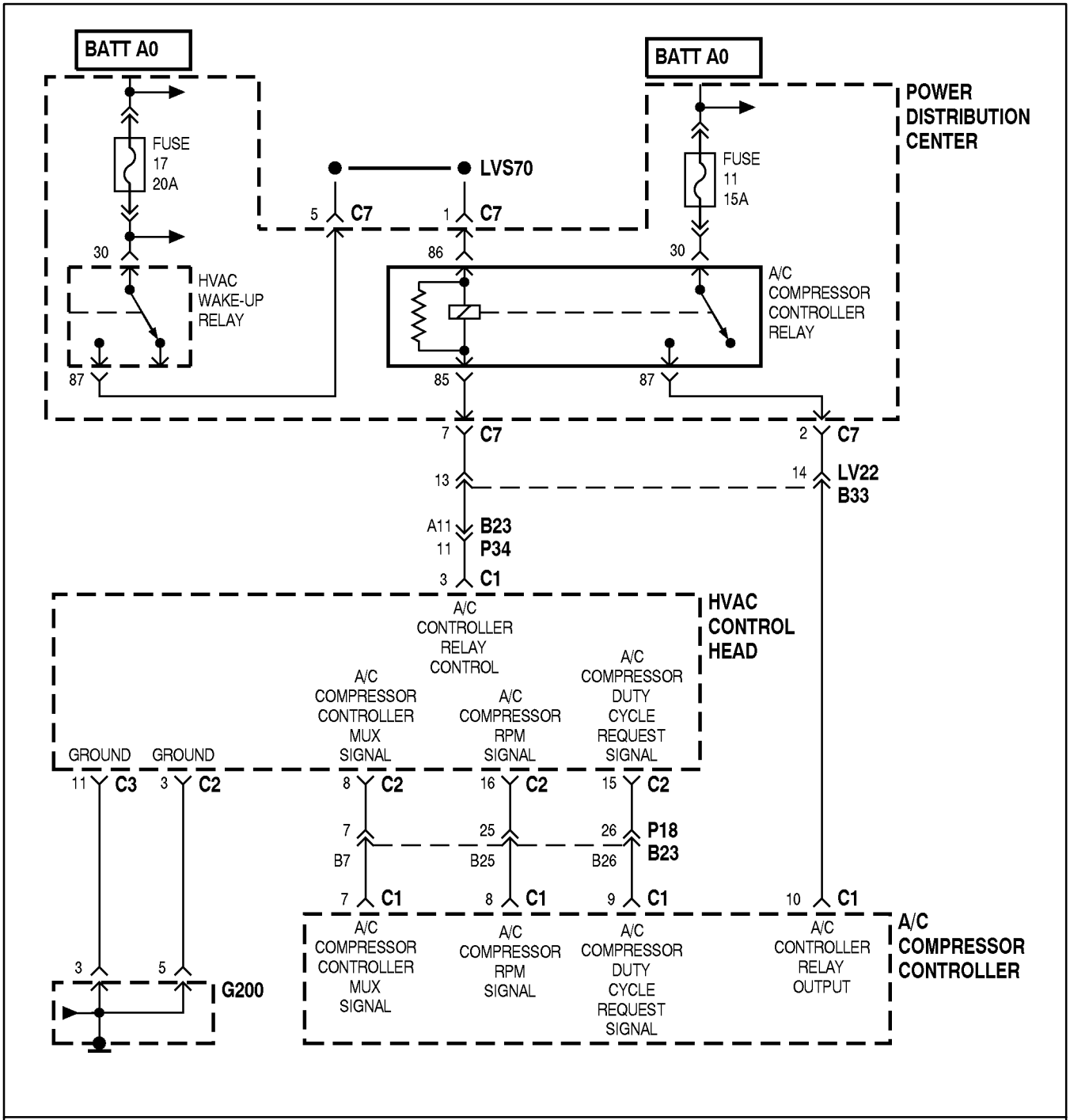

TEST 9 – COMPRESSOR PWM DRIVER OPEN

Description: The compressor controller signal is a Pulse Width Modulation (PWM) signal. If a short or open is detected in the line, this code will be set.

Detection: Whenever the HVAC system is in Service mode.

Related Code: Output Short to B(+)

Possible Causes:

- Short in compressor controller PWM wiring.
- Open in compressor controller PWM wiring.
- Shorted driver.

TEST 9 – COMPRESSOR PWM DRIVER OPEN

STEP	ACTION	YES	NO
1	HAS TEST 1 BEEN COMPLETED?	GO TO STEP 2.	PERFORM TEST 1.
2	DISCONNECT COMPRESSOR CONTROLLER – C1 CONNECTOR.** TURN KEY ON. USING A VOLTMETER, PROBE BETWEEN C1 PIN 10 AND C1 PIN 6. **A/C COMPRESSOR CONTROLLER – C1** CAV / COLOR / FUNCTION 6 / BK / GROUND 7 / YL / A/C COMPRESSOR CONTROLLER MUX SIGNAL 8 / DB / A/C COMPRESSOR RPM SIGNAL 9 / LB / A/C COMPRESSOR DUTY CYCLE REQUEST SIGNAL 10 / VT / A/C CONTROL RELAY OUTPUT 5 1 10 6 IS 12V PRESENT?	GO TO STEP 4.	GO TO STEP 3.
3	USING AN OHMMETER, PROBE FROM C1 PIN 10 AND CHASSIS GROUND. IS 12V PRESENT?	REPAIR OPEN IN GROUND CIRCUIT.*	GO TO STEP 6.
4	RECONNECT COMPRESSOR CONTROLLER CONNECTOR. REMOVE HVAC CONTROL HEAD, BUT DO NOT DISCONNECT. TURN KEY ON. TURN BLOWER AND A/C ON (TO RUN COMPRESSOR). USING AN OSCILLOSCOPE OR METER (FLUKE 80 SERIES OR EQUIVALENT), BACKPROBE CONTROL HEAD CONNECTOR – C2 PIN 15 AND CHASSIS GROUND. **HVAC CONTROL HEAD - C2** CAV / COLOR / FUNCTION 1 / WT / HVAC CONTROL FEED 13 / TN / EXPANSION VALVE GROUND 14 / YL/BR / BLOWER CONTROL 15 / LB / DUTY CYCLE REQUEST 16 / DB / A/C COMPRESSOR RPM 8 1 16 9 IS A 100 HZ PWM SIGNAL WITH 5 TO 95% DUTY CYCLE PRESENT?	GO TO STEP 5.	REPLACE HVAC CONTROL HEAD.*
5	DISCONNECT HVAC CONTROL HEAD – C2 CONNECTOR.** DISCONNECT COMPRESSOR CONTROLLER – C1 CONNECTOR.** USING AN OHMMETER, PROBE BETWEEN HVAC CONTROL HEAD – C2 PIN 15 AND COMPRESSOR CONTROLLER C–1 PIN 9 FOR CONTINUITY. **A/C COMPRESSOR CONTROLLER – C1** CAV / COLOR / FUNCTION 6 / BK / GROUND 7 / YL / A/C COMPRESSOR CONTROLLER MUX SIGNAL 8 / DB / A/C COMPRESSOR RPM 9 / LB / A/C COMPRESSOR DUTY CYCLE REQUEST SIGNAL 10 / VT / A/C CONTROL RELAY OUTPUT 5 1 10 6 IS CONTINUITY PRESENT?	REPLACE COMPRESSOR CONTROLLER.*	REPAIR OPEN IN CIRCUIT.*
6	VERIFY CONDITION OF FUSE 11 IN THE POWER DISTRIBUTION CENTER. IS FUSE BLOWN?	GO TO STEP 8.	GO TO STEP 7.
7	DISCONNECT PDC CONNECTOR – C7.** USING AN OHMMETER, PROBE BETWEEN PDC CONNECTOR – C7 PIN 2 AND COMPRESSOR CONTROLLER CONNECTOR – C1 PIN 10. IS CONTINUITY PRESENT?	REPLACE A/C CONTROL RELAY.*	REPAIR OPEN IN CIRCUIT.*

***Perform Verification TEST VER-1A. **Check connectors - Clean/repair as necessary.**

TEST 9 – COMPRESSOR PWM DRIVER OPEN

STEP	ACTION	YES	NO
8	USING AN OHMMETER, PROBE BETWEEN COMPRESSOR CONTROLLER – C1 PIN 10 AND CHASSIS GROUND. **A/C COMPRESSOR CONTROLLER – C1** CAV / COLOR / FUNCTION 6 / BK / GROUND 7 / YL / A/C COMPRESSOR CONTROLLER MUX SIGNAL 8 / DB / A/C COMPRESSOR RPM 9 / LB / A/C COMPRESSOR DUTY CYCLE REQUEST SIGNAL 10 / VT / A/C CONTROL RELAY OUTPUT 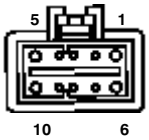 IS CONTINUITY PRESENT?	REPAIR SHORT IN CIRCUIT BETWEEN PDC C7 PIN 2 AND COMPRESSOR CONTROLLER C1 PIN 10.*	REPLACE A/C CONTROL RELAY.*

***Perform Verification TEST VER-1A. **Check connectors - Clean/repair as necessary.**

THIS PAGE INTENTIONALLY LEFT BLANK

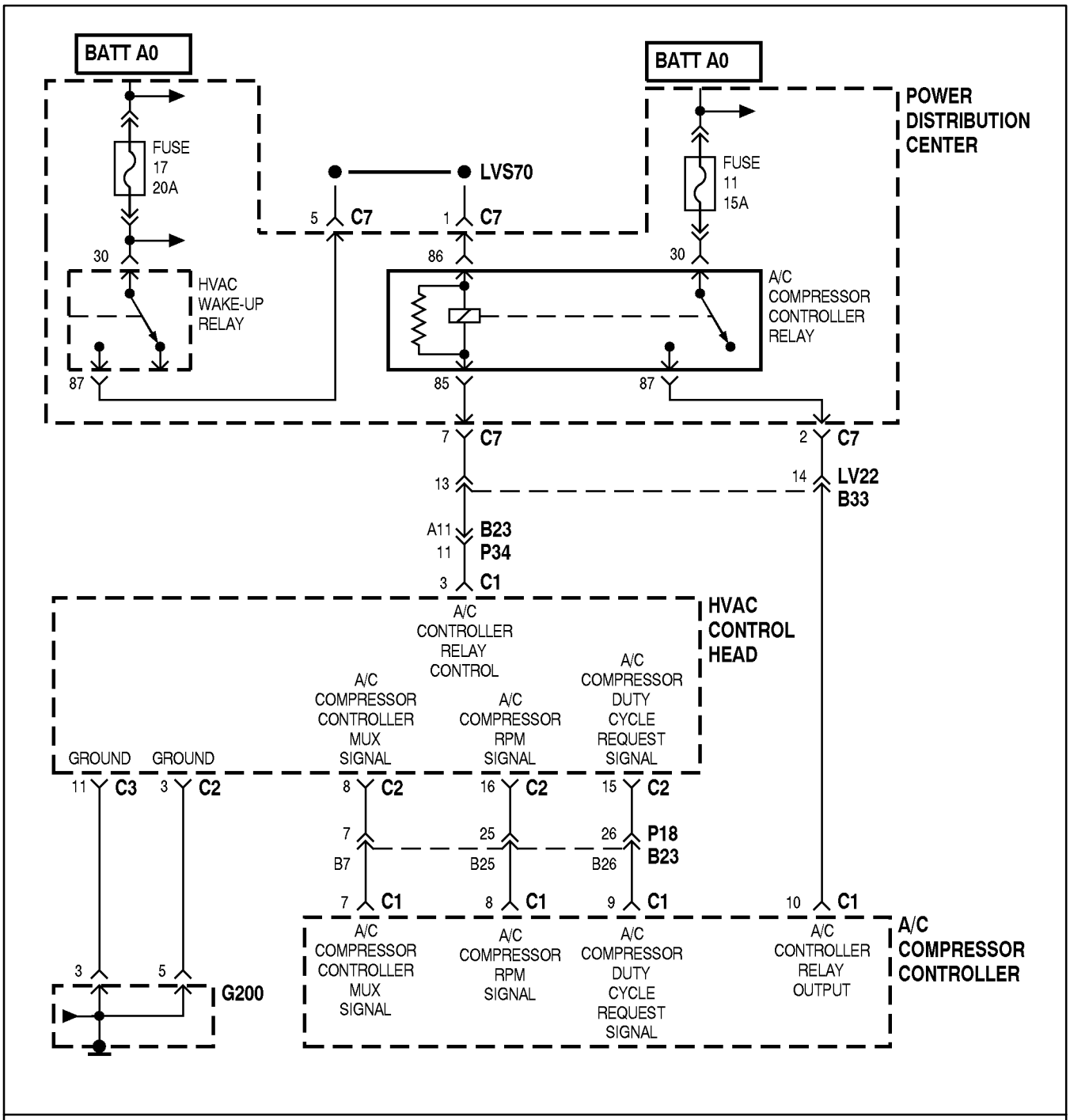

TEST 10 – COMPRESSOR RELAY DRIVER OPEN

Description: The compressor relay is driven by a low voltage signal. If a short or open is detected in the line, this code will be set.

Detection: Whenever the HVAC system is in Service mode.

Related Code: Output Short to B(+)

Possible Causes:

- Short in compressor relay driver wiring.
- Open in compressor relay driver wiring.
- Shorted driver.

TEST 10 – COMPRESSOR RELAY DRIVER OPEN

STEP	ACTION	YES	NO
1	HAS TEST 1 BEEN COMPLETED?	GO TO STEP 2.	PERFORM TEST 1.
2	VERIFY CONDITION OF FUSE 11 IN PDC. IS FUSE BLOWN?	GO TO STEP 3.	GO TO STEP 4.
3	REMOVE A/C CONTROL RELAY.** DISCONNECT A/C COMPRESSOR CONTROLLER – C1 CONNECTOR.** USING AN OHMMETER, PROBE BETWEEN COMPRESSOR CONTROLLER – C1 PIN 10 AND CHASSIS GROUND. **A/C COMPRESSOR CONTROLLER – C1** CAV / COLOR / FUNCTION 6 / BK / GROUND 7 / YL / A/C COMPRESSOR CONTROLLER MUX SIGNAL 8 / DB / A/C COMPRESSOR RPM SIGNAL 9 / LB / A/C COMPRESSOR DUTY REQUEST SIGNAL 10 / VT / A/C CONTROL RELAY OUTPUT 5 1 10 6 IS CONTINUITY PRESENT?	REPAIR SHORT IN CIRCUIT BETWEEN PDC AND COMPRESSOR CONTROLLER.*	REPLACE A/C CONTROL RELAY.*
4	DISCONNECT A/C COMPRESSOR CONTROLLER – C1 CONNECTOR.** TURN KEY TO RUN. TURN A/C ON. TURN BLOWER ON. USING A VOLTMETER, PROBE BETWEEN COMPRESSOR CONTROLLER – C1 PIN 10 AND CHASSIS GROUND. **A/C COMPRESSOR CONTROLLER – C1** CAV / COLOR / FUNCTION 6 / BK / GROUND 7 / YL / A/C COMPRESSOR CONTROLLER MUX SIGNAL 8 / DB / A/C COMPRESSOR RPM SIGNAL 9 / LB / A/C COMPRESSOR DUTY CYCLE REQUEST SIGNAL 10 / VT / A/C CONTROL RELAY OUTPUT 5 1 10 6 IS 12V PRESENT?	REPLACE COMPRESSOR CONTROLLER.*	GO TO STEP 5.
5	DISCONNECT PDC C7 CONNECTOR.** USING AN OHMMETER, PROBE BETWEEN PDC – C7 PIN 2 AND COMPRESSOR CONTROLLER – C1 PIN 10. **PDC – C7** CAV / COLOR / FUNCTION 2 / VT / A/C CONTROL RELAY OUTPUT 7 / PK / A/C CONTROL RELAY CONTROL 5 1 10 6 IS CONTINUITY PRESENT?	GO TO STEP 6.	REPAIR OPEN IN CIRCUIT BETWEEN PDC AND COMPRESSOR CONTROLLER.*
6	USING A VOLTMETER, PROBE BETWEEN PDC – C7 PIN 7 AND CHASSIS GROUND. IS 12V PRESENT?	REPAIR CIRCUIT.*	REPLACE HVAC CONTROL HEAD.*

***Perform Verification TEST VER-1A. **Check connectors - Clean/repair as necessary.**

TEST 10 – COMPRESSOR RELAY DRIVER OPEN

STEP	ACTION	YES	NO
7	RECONNECT PDC – C7 CONNECTOR. KEY IN RUN POSITION. REMOVE HVAC CONTROL HEAD. DISCONNECT HVAC CONTROL HEAD – C1 CONNECTOR.** USING A VOLTMETER, PROBE BETWEEN C1 PIN 3 AND CHASSIS GROUND. **HVAC CONTROL HEAD – C1** CAV / COLOR / FUNCTION 14 / DB/WT / ACTUATOR COMMON 15 / DB/RD / BLEND AIR ACTUATOR DRIVE 16 / GY/DB / RECIRCULATION ACTUATOR DRIVER 17 / LB/RD / 4–WAY VALVE CONTROL 18 / DG/YL / MODE ACTUATOR DRIVER 10 1 20 11 IS CONTINUITY PRESENT?	REPLACE HVAC CONTROL HEAD.*	REPAIR OPEN IN CIRCUIT BETWEEN HVAC CONTROL HEAD AND PDC.*

***Perform Verification TEST VER-1A. **Check connectors - Clean/repair as necessary.**

THIS PAGE INTENTIONALLY LEFT BLANK

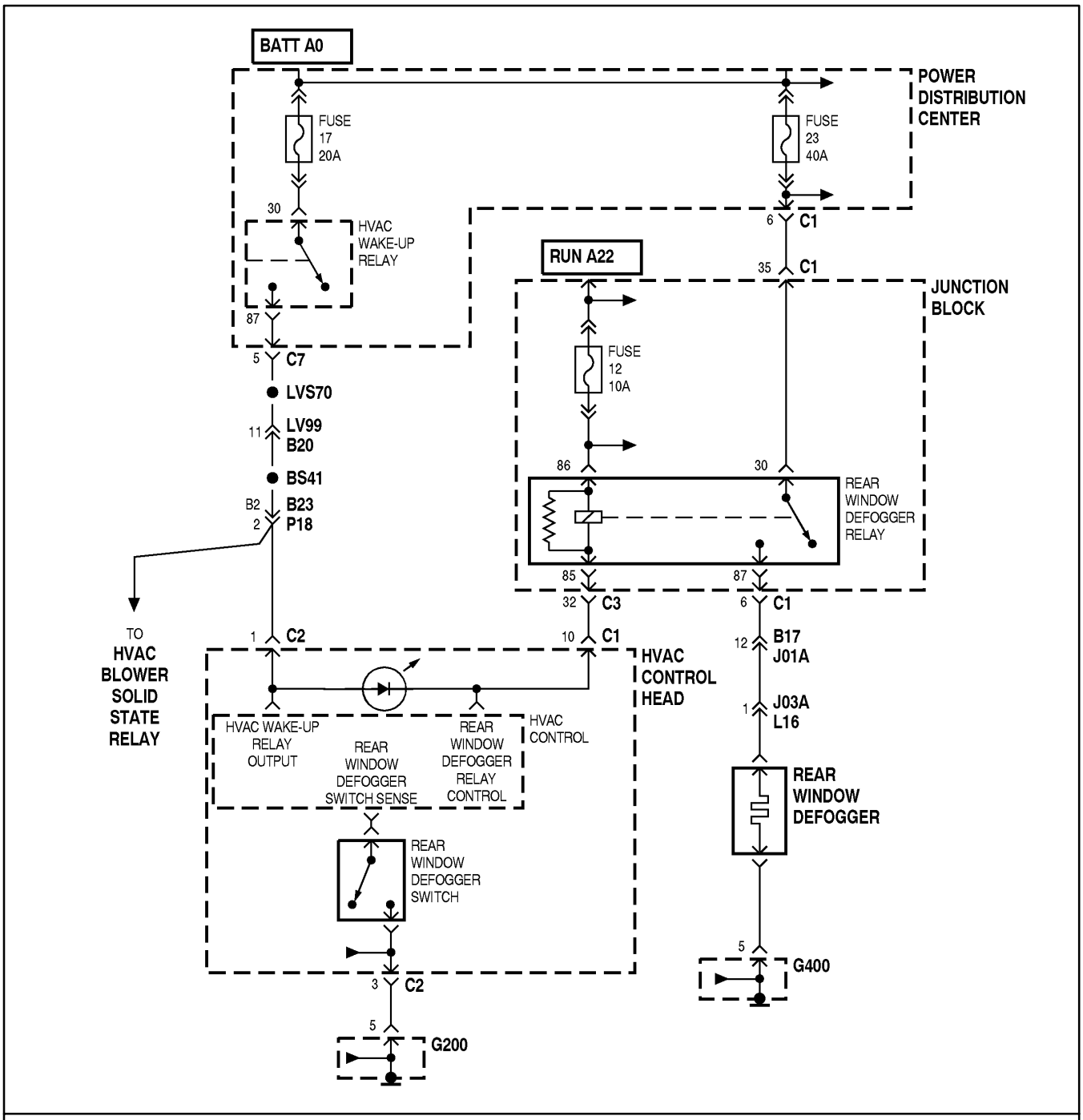

TEST 11 – EBL DRIVER OPEN

Description: The Electric Back Light (EBL) is driven by a low voltage signal. If a short or open is detected in the line, this code will be set.

Detection: Whenever the HVAC system is in Service mode.

Related Code: Output Short to B(+)

Possible Causes:

- Short in EBL driver wiring.
- Open in EBL driver wiring.
- Shorted driver.

TEST 11 – EBL DRIVER OPEN

STEP	ACTION	YES	NO
1	HAS TEST 1 BEEN COMPLETED?	GO TO STEP 2.	PERFORM TEST 1.
2	WITH KEY ON DEPRESS EBL BUTTON. DOES EBL INDICATOR LIGHT ILLUMINATE?	GO TO STEP 3.	REPLACE CONTROL HEAD.*
3	VERIFY CONDITION OF FUSE 12 IN JUNCTION BLOCK. IS FUSE BLOWN?	GO TO STEP 4.	GO TO STEP 5.
4	REMOVE REAR WINDOW DEFOGGER RELAY.** REMOVE HVAC CONTROL HEAD. DISCONNECT HVAC CONTROL HEAD CONNECTOR – C1 PIN 10.** USING AN OHMMETER, PROBE BETWEEN C1 PIN 10 AND CHASSIS GROUND. **HVAC CONTROL HEAD – C1** CAV: 10 — COLOR: WT/RD — FUNCTION: REAR WINDOW DEFOGGER RELAY CONTROL 10 1 / 20 11 IS CONTINUITY PRESENT?	REPAIR SHORT IN CIRCUIT.*	REPLACE REAR WINDOW DEFOGGER RELAY.*
5	VERIFY CONDITION OF FUSE 17 IN THE PDC. IS FUSE BLOWN?	GO TO STEP 6.	GO TO STEP 7.
6	DISCONNECT EBL B+ AT BACK GLASS CONNECTOR (REFER TO 8W–42 IN WIRING DIAGRAMS).** USING AN OHMMETER, PROBE BETWEEN EBL B+ CONNECTOR AND CHASSIS GROUND. IS CONTINUITY PRESENT?	REPAIR SHORT IN B+ CIRCUIT.*	REPLACE REAR WINDOW DEFOGGER RELAY.*
7	TURN KEY TO RUN. TURN EBL ON. USING A VOLTMETER, PROBE B+ CIRCUIT AT BACK GLASS (REFER TO 8W–42 IN WIRING DIAGRAMS). IS 12 VOLTS PRESENT?	GO TO STEP 8.	GO TO STEP 9.
8	DISCONNECT EBL GROUND CIRCUIT CONNECTOR AT BACK GLASS (REFER TO 8W–42 IN WIRING DIAGRAMS). USING AN OHMMETER, PROBE BETWEEN EBL GROUND CONNECTOR AND CHASSIS GROUND. IS CONTINUITY PRESENT?	REPAIR EBL GRID (REFER SECTION 8N IN STANDARD NS SERVICE MANUAL).*	REPAIR OPEN IN GROUND CIRCUIT.*
9	USING A VOLTMETER, BACKPROBE BETWEEN JUNCTION BLOCK – C1 PIN 6 AND CHASSIS GROUND. **JUNCTION BLOCK – C1** CAV: 6 — COLOR: BK/WT — FUNCTION: REAR WINDOW DEFOGGER RELAY OUTPUT 7 14 18 22 29 36 / 1 8 15 19 23 30 IS 12V PRESENT?	REPAIR OPEN IN CIRCUIT BETWEEN JUNCTION BLOCK AND EBL.*	GO TO STEP 10.

***Perform Verification TEST VER-1A. **Check connectors - Clean/repair as necessary.**

TEST 11 – EBL DRIVER OPEN

STEP	ACTION	YES	NO
10	TURN EBL OFF. USING A VOLTMETER, BACKPROBE BETWEEN JUNCTION BLOCK C3 PIN 32 AND CHASSIS GROUND. **JUNCTION BLOCK – C3** CAV: 23 / COLOR: WT/RD / FUNCTION: REAR WINDOW DEFOGGER RELAY DRIVER 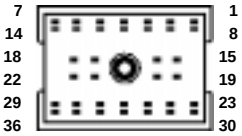 IS 12V PRESENT?	GO TO STEP 11.	REPLACE REAR WINDOW DEFOGGER RELAY.*
11	REMOVE HVAC CONTROL HEAD. DISCONNECT HVAC CONTROL HEAD – C1 CONNECTOR.** USING A VOLTMETER, PROBE BETWEEN C1 PIN 10 AND CHASSIS GROUND. **HVAC CONTROL HEAD – C1** CAV: 10 / COLOR: WT/RD / FUNCTION: REAR WINDOW DEFOGGER RELAY CONTROL 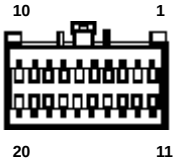 IS 12V PRESENT?	REPLACE HVAC CONTROL HEAD.*	REPAIR OPEN IN CIRCUIT BETWEEN HVAC CONTROL HEAD AND JUNCTION BLOCK.*

***Perform Verification TEST VER-1A. **Check connectors - Clean/repair as necessary.**

THIS PAGE INTENTIONALLY LEFT BLANK

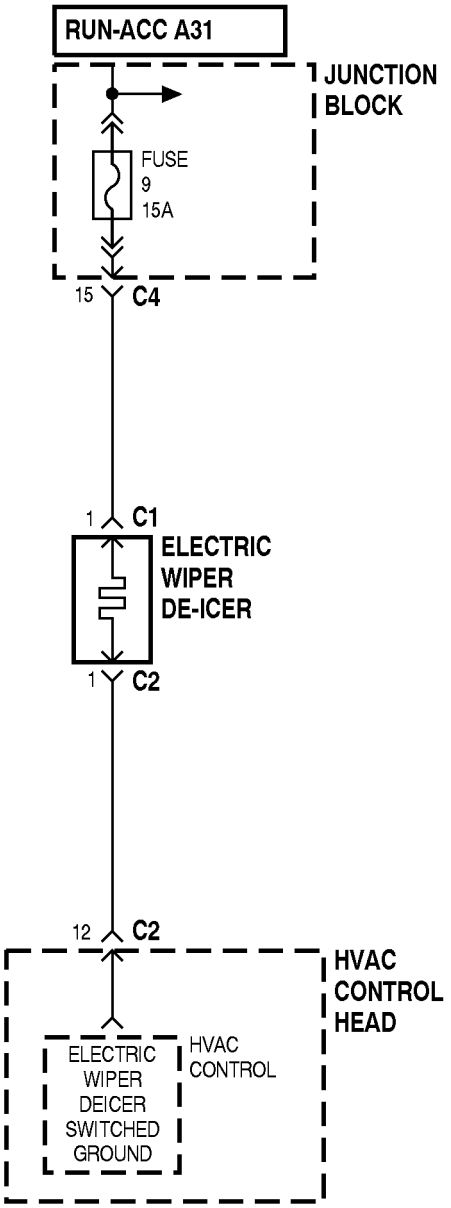

TEST 12 – EWD DRIVER OPEN

Description: The Electric Wiper De-icer (EWD) is driven by a low voltage signal. If a short or open is detected in the line, this code will be set.

Detection: Whenever the HVAC system is in Service mode.

Related Code: Output Short to B(+)

Possible Causes:

- Short in EWD driver wiring.
- Open in EWD driver wiring.
- Shorted driver.

TEST 12 – EWD DRIVER OPEN

STEP	ACTION	YES	NO
1	HAS TEST 1 BEEN COMPLETED?	GO TO STEP 2.	PERFORM TEST 1.
2	REMOVE INSTRUMENT PANEL COVER. TURN KEY ON. USING A VOLTMETER, BACKPROBE FROM ELECTRONIC WIPER DE-ICER (EWD) CONNECTOR (LOCATED AT LOWER RIGHT CORNER OF WINDSHIELD) TO GROUND FOR 10–14 VOLTS. IS 10–14 VOLTS PRESENT?	GO TO STEP 5.	GO TO STEP 3.
3	VERIFY CONDITION OF FUSE NO. 9 IN THE JUNCTION BLOCK. IS FUSE BLOWN?	REPLACE FUSE AND RETEST FOR DTC.*	REPAIR OPEN B+ CIRCUIT BETWEEN PDC AND EWD.
4	REMOVE HVAC CONTROL HEAD. DISCONNECT HVAC CONTROL HEAD – C2 CONNECTOR.** DISCONNECT EWD CONNECTOR (REFER TO 8W–42 IN WIRING DIAGRAMS).** USING AN OHMMETER, PROBE BETWEEN HVAC CONTROL HEAD – C2 PIN 12 AND EWD CONNECTOR (REFER TO 8W–42 IN WIRING DIAGRAMS). IS CONTINUITY PRESENT?	REPLACE HVAC CONTROL HEAD.*	REPAIR OPEN IN CIRCUIT.*

***Perform Verification TEST VER-1A. **Check connectors - Clean/repair as necessary.**

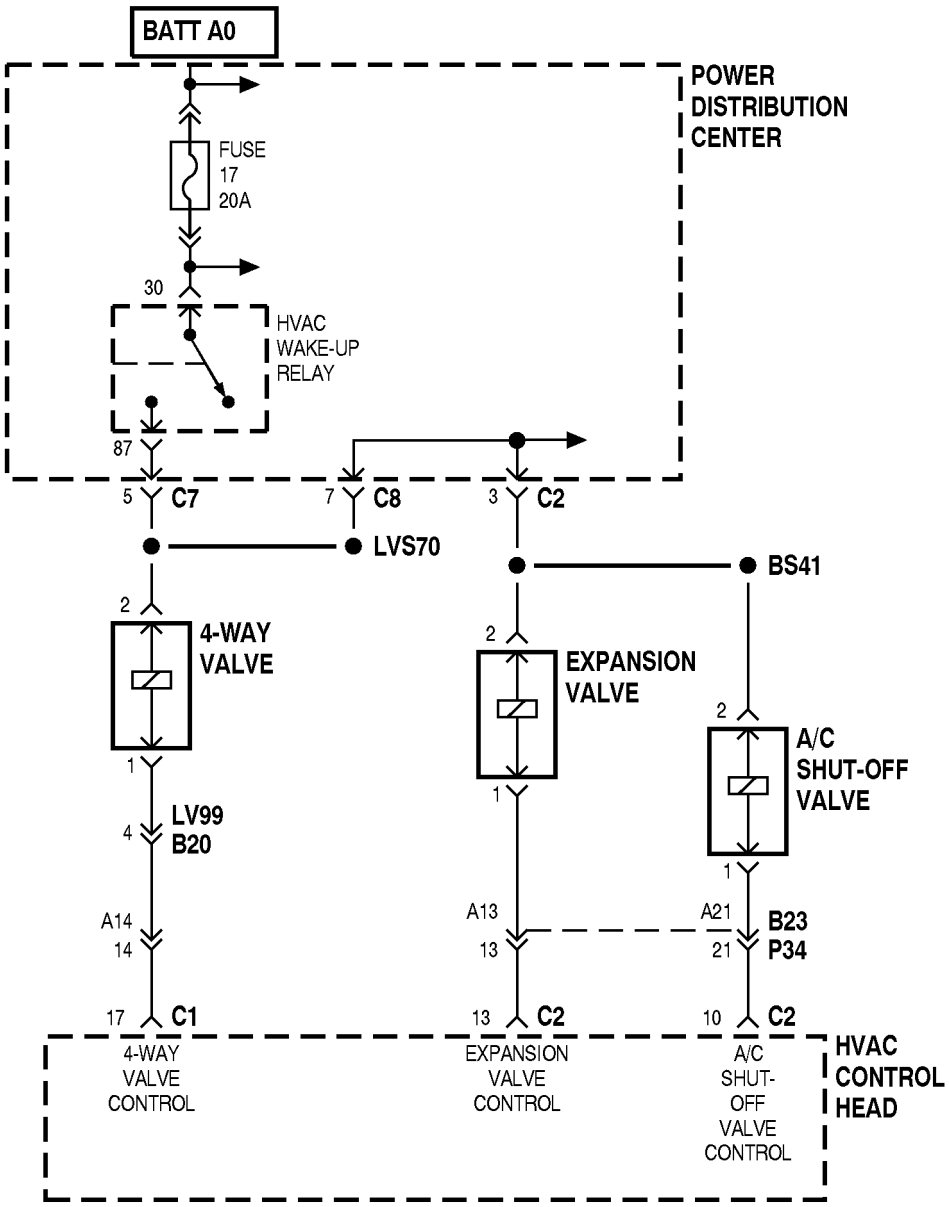

TEST 13 – EXV DRIVER OPEN

Description: The Electronic Expansion Valve (EXV) is driven by a Pulse Width Modulation (PWM) signal. If a short or open is detected in the line, this code will be set.

Detection: Whenever the HVAC system is in Service mode.

Related Code: Output Short to B(+)

Possible Causes:

- Short in EXV wiring.
- Open in EXV wiring.
- EXV driver FET shorted.

TEST 13 – EXV DRIVER OPEN

STEP	ACTION	YES	NO
1	HAS TEST 1 BEEN COMPLETED?	GO TO STEP 2.	PERFORM TEST 1.
2	DISCONNECT ELECTRONIC EXPANSION VALVE – C1 CONNECTOR.** TURN KEY ON. USING A VOLTMETER, PROBE BETWEEN PINS 1 AND 2 FOR VOLTAGE. **EXPANSION VALVE – C1** CAV / COLOR / FUNCTION 1 / TN / EXPANSION VALVE CONTROL 2 / BR / HVAC WAKE–UP RELAY OUTPUT 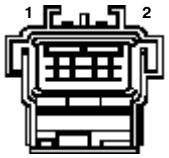 IS VOLTAGE GREATER THAN 10V?	GO TO STEP 3.	GO TO STEP 5.
3	PLACE VEHICLE IN READY MODE AND RUN THE COMPRESSOR. USING A MULTI–METER (FLUKE 80 SERIES OR EQUIVALENT), PROBE BETWEEN PINS 1 AND 2. IS A 1920 HZ PWM SIGNAL WITH 5% TO 90% DUTY CYCLE PRESENT?	REPLACE EXPANSION VALVE.*	GO TO STEP 4.
4	REMOVE HVAC CONTROL HEAD.** DISCONNECT HVAC CONTROL HEAD – C2 CONNECTOR.** PROBE FOR CONTINUITY OR SHORT TO GROUND BETWEEN C2 PIN 13 AND EXV CONNECTOR PIN 1. **HVAC CONTROL HEAD - C2** CAV / COLOR / FUNCTION 2 / BK/PK / VOLT SENSE IGBT 5 / BK / GROUND 8 / YL / CURRENT DIAG A/C PILOT SENSE 13 / TN / EXPANSION VALVE GROUND 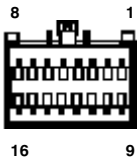 IS CIRCUIT OK?	REPLACE CONTROL HEAD.*	REPAIR CIRCUIT AS NECESSARY.*
5	VERIFY CONDITION OF FUSE 17 IN THE POWER DISTRIBUTION CENTER. IS FUSE BLOWN?	GO TO STEP 6.	REPAIR OPEN IN EXV IGNITION CIRCUIT.*
6	USING AN OHMMETER, PROBE BETWEEN EXV CONNECTOR PIN 2 AND GROUND. IS CONTINUITY PRESENT?	REPAIR SHORT IN EXV IGNITION CIRCUIT.*	REPLACE EXV.*

***Perform Verification TEST VER-1A. **Check connectors - Clean/repair as necessary.**

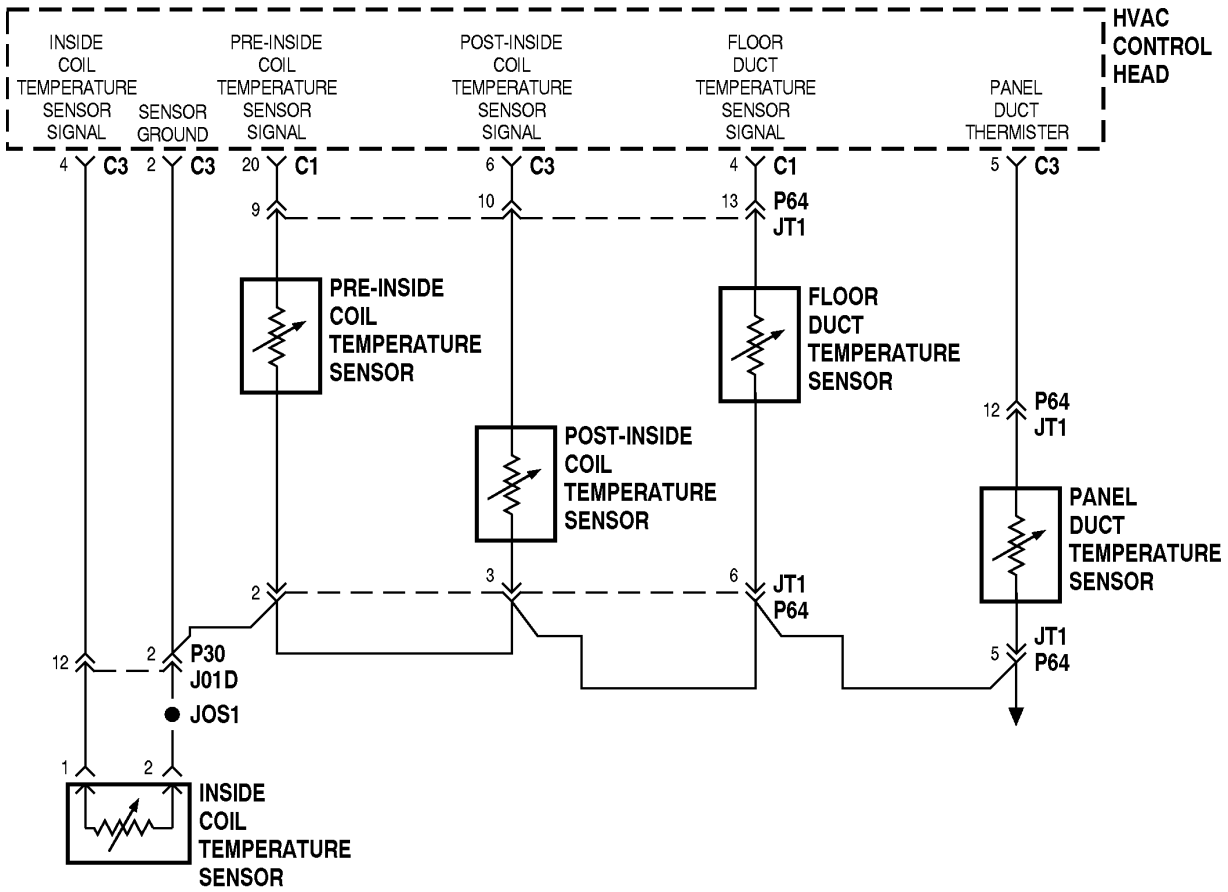

TEST 14 – FLOOR DUCT THERMISTOR

Description: The HVAC control head uses this thermistor in order to monitor the temperature at the floor duct outlet. This code will set if the Floor duct thermistor circuit develops an open or short.

Detection: Whenever the vehicle is in Ready mode.

Possible Causes:

- Faulty Floor Duct Temperature Sensor.
- Short in Floor Duct Temperature Sensor wiring.
- Open in Floor Duct Temperature Sensor wiring.

Temp. (°F)	Temp. (°C)	Nominal Resistance (kΩ)
–40	–40	332.8
–22	–30	175.5
–4	–20	96.5
14	–10	55.1
32	0	32.6
50	10	19.9
68	20	12.5

Temp. (°F)	Temp. (°C)	Nominal Resistance (kΩ)
86	30	8.1
104	40	6.3
122	50	3.8
140	60	2.5
158	70	1.7
176	80	1.3
194	90	0.92

TABLE 2 – FLOOR DUCT THERMISTOR

TEST 14 – FLOOR DUCT THERMISTOR

STEP	ACTION	YES	NO
1	HAS TEST 1 BEEN COMPLETED?	GO TO STEP 2.	PERFORM TEST 1.
2	REMOVE HVAC CONTROL HEAD. DISCONNECT C1 AND C3 CONNECTORS.** USING AN OHMMETER MEASURE THE RESISTANCE BETWEEN C1 PIN 4 AND C3 PIN 2. COMPARE RESULTS WITH THE TABLE ON THE PREVIOUS PAGE. **HVAC CONTROL HEAD – C1** CAV: 4 — COLOR: DG — FUNCTION: FLOOR DUCT TEMPERATURE SENSOR SIGNAL **HVAC CONTROL HEAD – C3** CAV: 2 — COLOR: DB/GY — FUNCTION: SENSOR GROUND IS THE RESISTANCE WITHIN RANGE?	REPLACE HVAC CONTROL HEAD.*	GO TO STEP 3.
3	REMOVE INLINE CONNECTOR P64 / JT1.** USING AN OHMMETER MEASURE THE RESISTANCE BETWEEN P64 PIN 13 AND P64 PIN 6. COMPARE RESULTS WITH THE TABLE ON THE PREVIOUS PAGE. **INLINE CONNECTOR P64** CAV: 6 — COLOR: DB/GY — FUNCTION: SENSOR RETURN CAV: 13 — COLOR: DG — FUNCTION: FLOOR DUCT THERMISTOR IS THE RESISTANCE WITHIN RANGE?	REPAIR WIRING BETWEEN INLINE CONNECTOR AND HVAC CONTROL HEAD.*	REPLACE FLOOR DUCT THERMISTOR.*

***Perform Verification TEST VER-1A. **Check connectors - Clean/repair as necessary.**

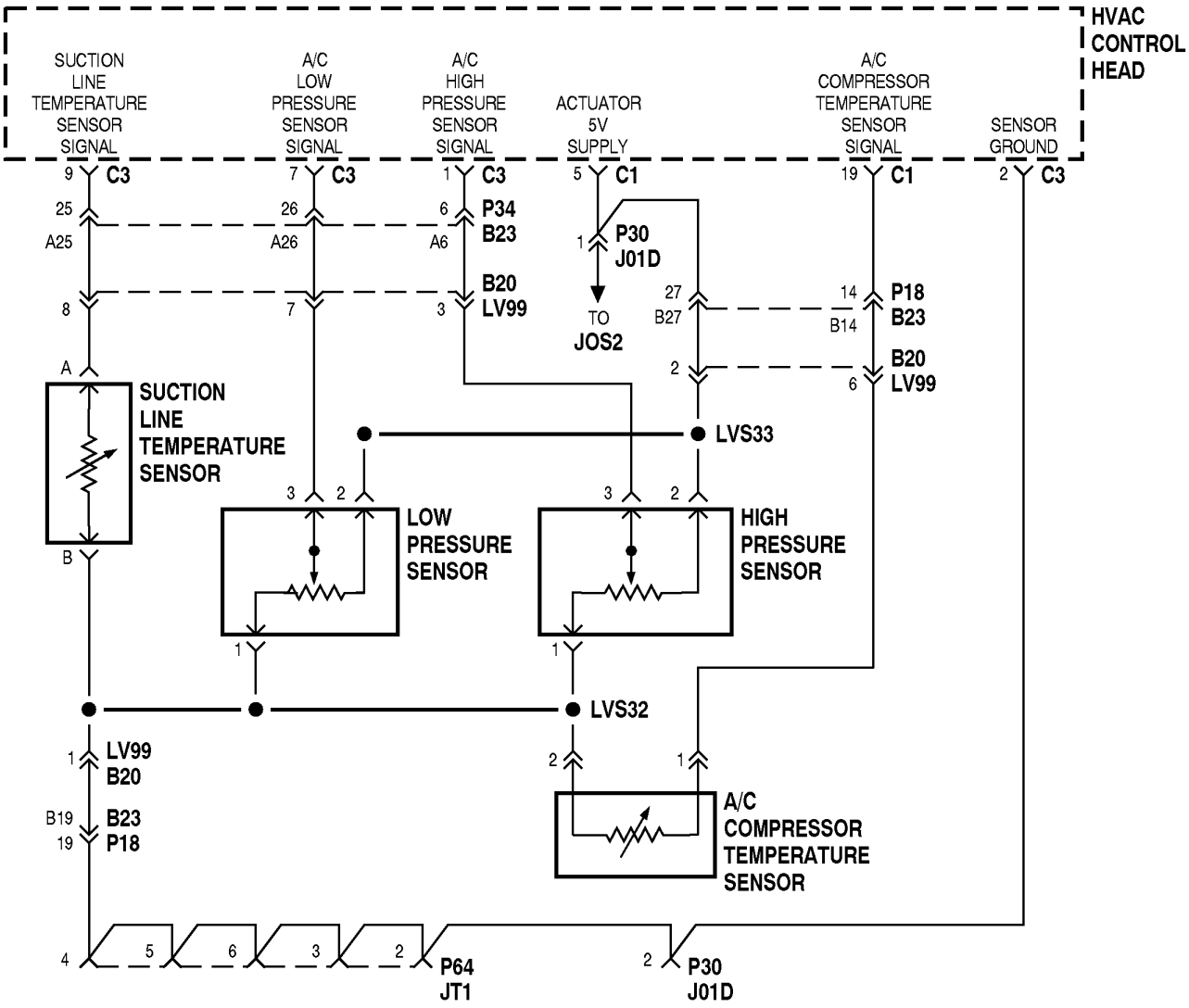

TEST 15 – HIGH PRESS SENSE

Description: The High Pressure Sensor is used to monitor Discharge line pressure. This code will set and the A/C compressor will be disabled when the Discharge line transducer is out of range.

Detection: Whenever the vehicle is in Ready mode.

Possible Causes:

- Faulty High Pressure Sensor.
- Short in High Pressure Sensor wiring.
- Open in High Pressure Sensor wiring.

TEST 15 – HIGH PRESS SENSE

STEP	ACTION	YES	NO
1	HAS TEST 1 BEEN COMPLETED?	GO TO STEP 2.	PERFORM TEST 1.
2	IS THE REFRIGERANT SYSTEM PROPERLY CHARGED?	GO TO STEP 3.	CHARGE SYSTEM AND RETEST.*
3	DISCONNECT HIGH PRESSURE SENSOR CONNECTOR.** TURN KEY ON. USING AN OHMMETER PROBE FOR 5V BETWEEN PIN 2 AND GROUND AT SENSOR CONNECTOR. **HIGH PRESSURE SENSOR** CAV / COLOR / FUNCTION 1 / DB/GY / SENSOR GROUND 2 / PK/DB / ACTUATOR 5V SUPPLY 3 / DB / A/C PRESSURE SIGNAL 4 / – / – 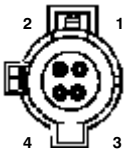 IS THE VOLTAGE APPROXIMATELY 5V?	GO TO STEP 4.	GO TO STEP 6.
4	REMOVE HVAC CONTROL HEAD, BUT DO NOT DISCONNECT.** RECONNECT HIGH PRESSURE SENSOR. TURN KEY ON. USING A VOLTMETER BACKPROBE BETWEEN HVAC CONTROL HEAD – C3 PIN 1 AND GROUND. **HVAC CONTROL HEAD – C3** CAV / COLOR / FUNCTION 1 / DB / A/C HIGH PRESSURE SENSOR SIGNAL 2 / DB/GY / SENSOR GROUND 11 / LG / GROUND 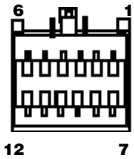 IS VOLTAGE PRESENT?	GO TO STEP 5.	REPAIR OPEN IN DISCHARGE TRANSDUCER RETURN LINE.*
5	PUT VEHICLE IN READY MODE. SET BLOWER AND A/C BUTTON TO ON. USING A VOLTMETER, BACKPROBE BETWEEN HVAC CONTROL HEAD – C3 PIN 1 AND GROUND. DOES VOLTAGE CHANGE WHEN COMPRESSOR IS RUNNING?	REPLACE CONTROL HEAD.	REPLACE DISCHARGE TRANSDUCER.*
6	RECONNECT HIGH PRESSURE SENSOR. REMOVE HVAC CONTROL HEAD, BUT DO NOT DISCONNECT.** USING A VOLTMETER, BETWEEN BACKPROBE HVAC CONTROL HEAD – C1 PIN 5 AND GROUND. **HVAC CONTROL HEAD – C1** CAV / COLOR / FUNCTION 5 / PK/DB / ACTUATOR 5V SUPPLY 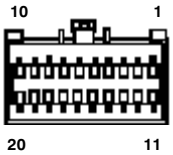 IS THE VOLTAGE APPROXIMATELY 5V?	GO TO STEP 7.	REPLACE CONTROL HEAD.*
7	DISCONNECT HVAC CONTROL HEAD – C1 CONNECTOR.** DISCONNECT INLINE CONNECTOR P30 / J01D.** USING AN OHMMETER, PROBE FROM CONTROL HEAD – C1 PIN 5 TO INLINE CONNECTOR P30 PIN 1 FOR CONTINUITY OR SHORT TO GROUND. **INLINE CONNECTOR P30** CAV / COLOR / FUNCTION 1 / PK/DB / ACTUATOR 5V REFERENCE 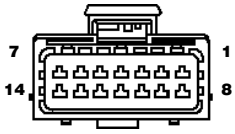 IS CIRCUIT OPEN OR SHORTED TO GROUND?	REPAIR CIRCUIT AS NECESSARY.*	GO TO STEP 8.

***Perform Verification TEST VER-1A. **Check connectors - Clean/repair as necessary.**

TEST 15 – HIGH PRESS SENSE

STEP	ACTION	YES	NO
8	DISCONNECT HIGH PRESSURE SENSOR CONNECTOR.** USING AN OHMMETER, PROBE FROM INLINE CONNECTOR J01D TO DISCHARGE TRANSDUCER SENSOR CONNECTOR PIN 2 FOR CONTINUITY AND SHORT TO GROUND. **INLINE CONNECTOR J01D** CAV / COLOR / FUNCTION 1 / DB/GY / SENSOR GROUND 1 8 7 14 **HIGH PRESSURE SENSOR** CAV / COLOR / FUNCTION 1 / DB/GY / SENSOR GROUND 2 / PK/DB / ACTUATOR 5V SUPPLY 3 / DB / A/C PRESSURE SIGNAL 4 / – / – 2 1 4 3 IS CIRCUIT OPEN OR SHORTED TO GROUND?	REPAIR CIRCUIT AS NECESSARY.*	REPLACE HIGH PRESSURE SENSOR.*

***Perform Verification TEST VER-1A. **Check connectors - Clean/repair as necessary.**

THIS PAGE INTENTIONALLY LEFT BLANK

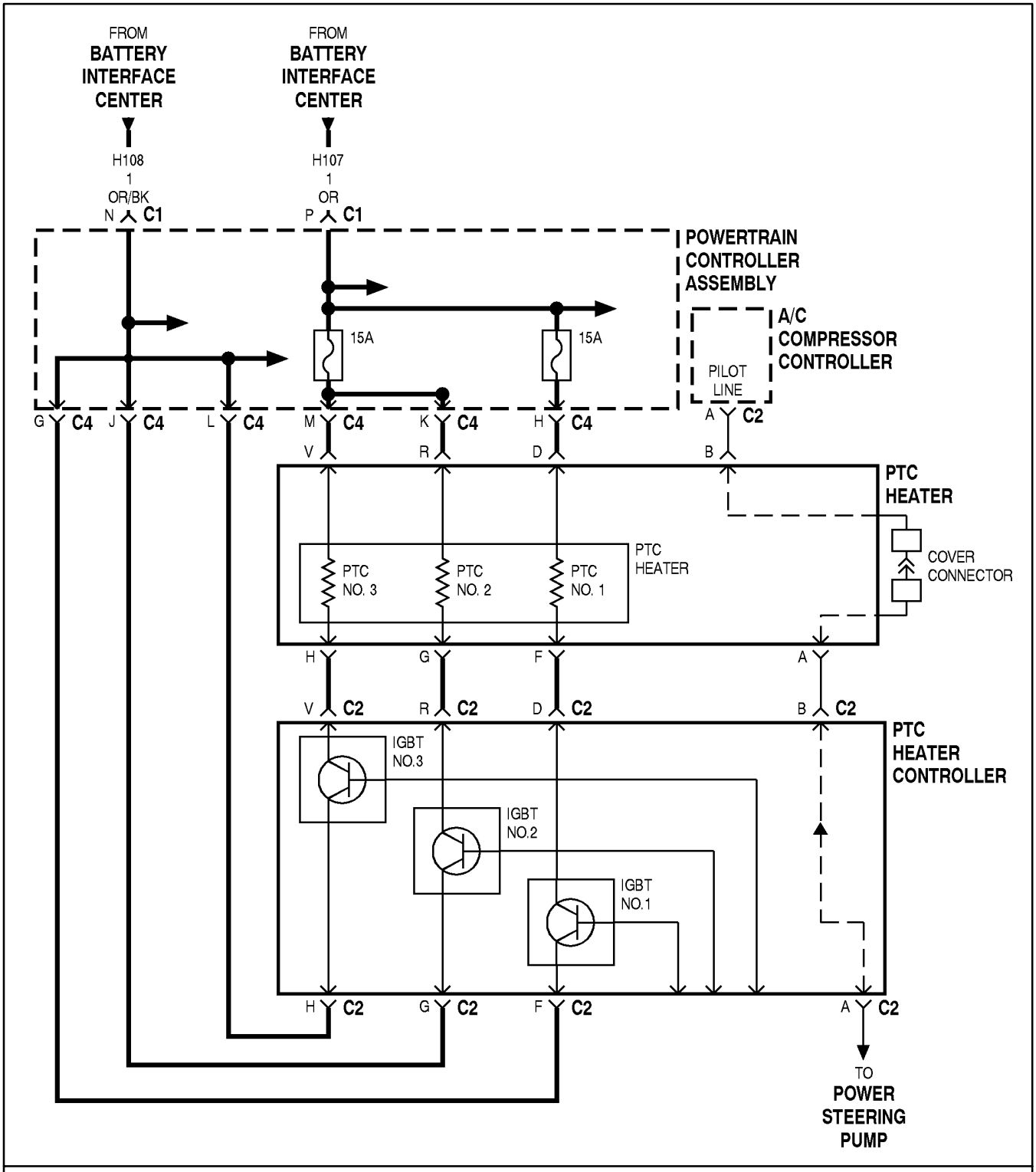

TEST 16 – IGBT SHORT DETECT

Description: The IGBT short detection feedback signal is used to detect an IGBT short condition from the PTC controller.

Detection: Whenever the vehicle is in Ready mode.

Possible Causes:

- Failed IGBT in PTC controller.

TEST 16 – IGBT SHORT DETECT

STEP	ACTION	YES	NO
1	HAS TEST 1 BEEN COMPLETED?	GO TO STEP 2.	PERFORM TEST 1.
2	REMOVE POWER DISTRIBUTION BOX (PDB) COVER. CHECK HIGH VOLTAGE PTC FUSES (2). IS A FUSE BLOWN?	GO TO STEP 3.	GO TO STEP 6.
3	USING AN OHMMETER, MEASURE THE RESISTANCE FROM PDB BUS BAR TO PTC HEATER (LOCATED AT BULKHEAD NEAR MASTER CYLINDER) PIN F, G AND H. **PTC HEATER CONTROLLER – C2** CAV / COLOR / FUNCTION D / LB/DB / HIGH VOLTAGE DC (–) F / PK/WT / HIGH VOLTAGE DC (–) G / PK/WT / HIGH VOLTAGE DC (–) H / LB/WT / HIGH VOLTAGE DC (–) R / RD/DB / HIGH VOLTAGE DC (–) V / PK/DB / HIGH VOLTAGE DC (–) 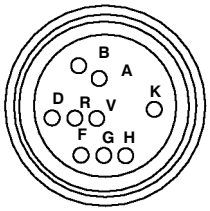 IS RESISTANCE LESS THAN 1KΩ ?	REPLACE PTC HEATER CONTROLLER.*	GO TO STEP 4.
4	REPLACE FUSE AND VERIFY REPAIR. USING SCAN TOOL ERASE HVAC DTC “IGBT SHORT DETECT.” DOES DTC RESET?	GO TO STEP 6.	REPAIR COMPLETED.*
5	DISCONNECT PTC HEATER CONNECTOR.** PROBE FOR RESISTANCE FROM PIN F TO PIN D. **PTC HEATER CONNECTOR** CAV / COLOR / FUNCTION D / LB/DB / HIGH VOLTAGE DC (+) F / PK/WT / HIGH VOLTAGE DC (–) G / PK/WT / HIGH VOLTAGE DC (–) H / LB/WT / HIGH VOLTAGE DC (–) R / RD/DB / HIGH VOLTAGE DC (+) V / PK/DB / HIGH VOLTAGE DC (+) 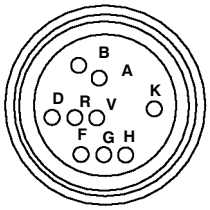 IS RESISTANCE LESS THAN 50Ω ?	REPLACE PTC HEATER.*	CALL EPIC HOT LINE.*
6	USING AN OHMMETER PROBE FOR CONTINUITY BETWEEN HVAC CONTROL HEAD – C2 PIN 2 AND PTC CONTROLLER C1 PIN 7. **HVAC CONTROL HEAD – C2** CAV / COLOR / FUNCTION 2 / BK/PK / IGBT SHORT SENSE 5 / BK/LG / GROUND 8 / YL / A/C COMPRESSOR MUX SIGNAL 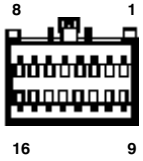 **PTC CONTROLLER - C1** CAV / COLOR / FUNCTION 7 / BK/PK / IGBT SHORT SENSE 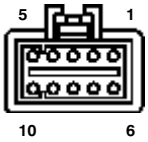 IS CONTINUITY PRESENT?	REPLACE PTC CONTROLLER.*	REPAIR OPEN IN SENSE CIRCUIT.*

***Perform Verification TEST VER-1A. **Check connectors - Clean/repair as necessary.**

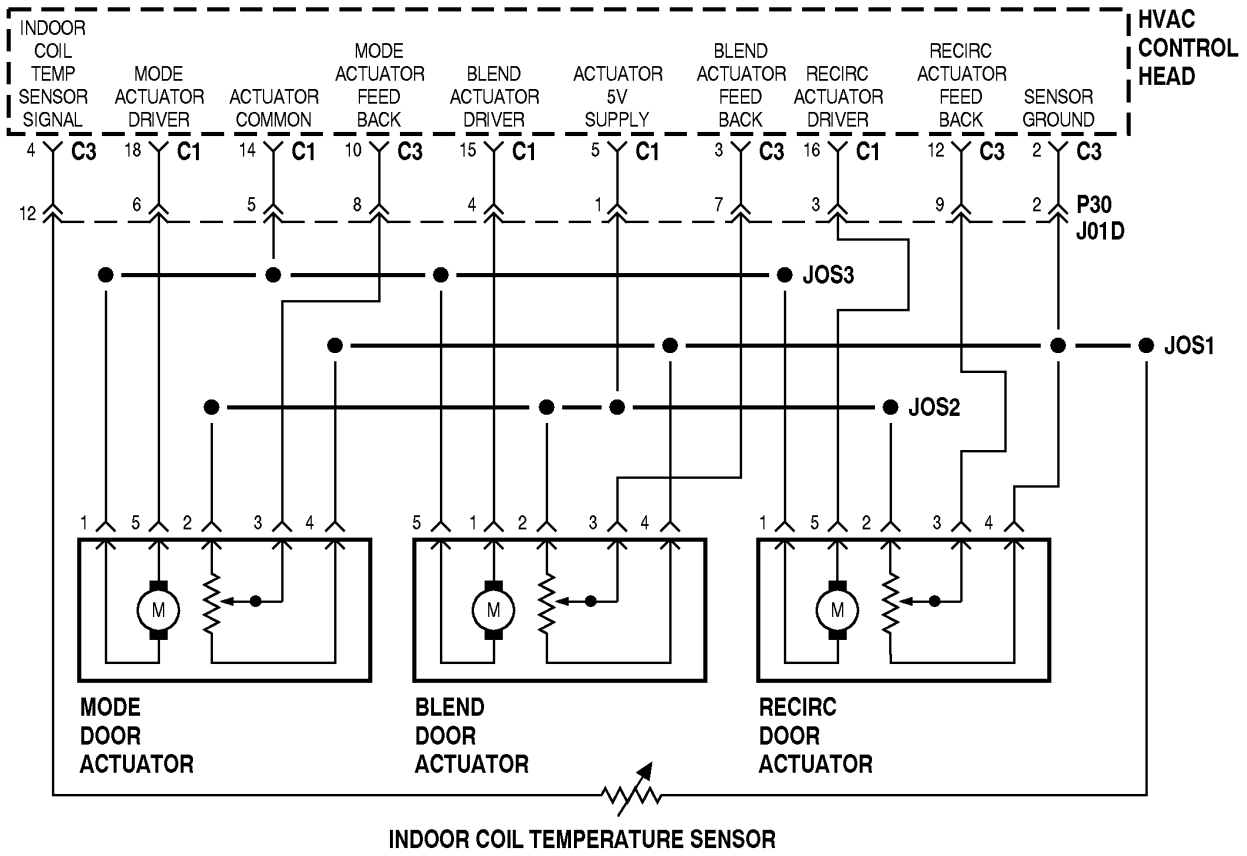

TEST 17 – INSIDE COIL TEMPERATURE

Description: The HVAC control head uses this thermistor to monitor the temperature of a probe located in the inside Coil fins. If this circuit becomes open the system will read –100°F and the HVAC control head will reduce the compressor duty cycle to 5% duty demand. This code will set if the fin probe thermistor is out of range.

Detection: Whenever the vehicle is in Ready mode.

Possible Causes:

- Faulty Fin probe Temperature sensor.
- Short in Fin probe Temperature sensor wiring.
- Open in Fin probe Temperature sensor wiring.

Temp. (°F)	Temp. (°C)	Nominal Resistance (kΩ)
–40	–40	181
–22	–30	86
–4	–20	50
14	–10	27
32	0	16
50	10	10

Temp. (°F)	Temp. (°C)	Nominal Resistance (kΩ)
68	20	6
86	30	5
104	40	2.7
122	50	1.8
140	60	1.3
158	70	1

TABLE 3 – FIN PROBE THERMISTOR

TEST 17 – INSIDE COIL TEMPERATURE

STEP	ACTION	YES	NO
1	HAS TEST 1 BEEN COMPLETED?	GO TO STEP 2.	PERFORM TEST 1.
2	REMOVE HVAC CONTROL HEAD. DISCONNECT HVAC CONTROL HEAD – C3 CONNECTOR.** **HVAC CONTROL HEAD – C3** CAV 2 – DB/GY – SENSOR GROUND CAV 4 – DR/OR – INSIDE COIL TEMPERATURE SENSOR SIGNAL 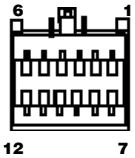 USING AN OHMMETER, MEASURE THE RESISTANCE BETWEEN C3 PIN 4 AND C3 PIN 2. COMPARE RESULTS WITH THE TABLE ON THE PREVIOUS PAGE. IS THE RESISTANCE WITHIN RANGE?	REPLACE HVAC CONTROL HEAD.*	GO TO STEP 3.
3	LOWER GLOVE BOX DOOR. REMOVE FIN PROBE CONNECTOR.** USING AN OHMMETER MEASURE THE RESISTANCE PINS 1 AND 2. COMPARE RESULTS WITH THE TABLE ON THE PREVIOUS PAGE. IS THE RESISTANCE WITHIN RANGE?	REPAIR WIRING BETWEEN FIN PROBE AND HVAC CONTROL HEAD.*	REPLACE FIN PROBE.*

***Perform Verification TEST VER-1A. **Check connectors - Clean/repair as necessary.**

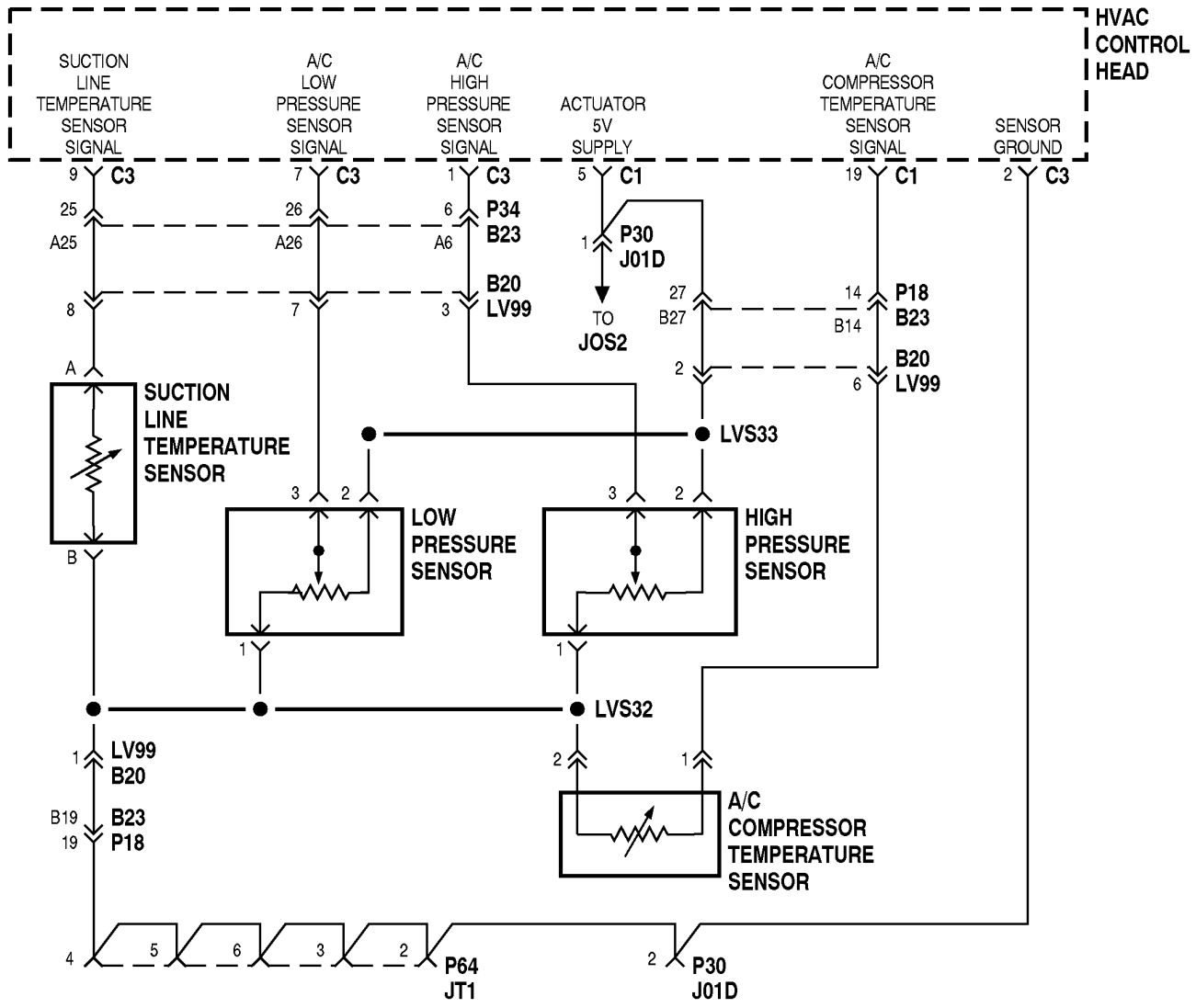

TEST 18 – LOW PRESSURE SENSE

Description: The Low Pressure Sensor is used to monitor suction line pressure. This code will set, and the A/C compressor will be disabled if the Low Pressure Sensor is out of range.

Detection: Whenever the vehicle is in Ready mode.

Possible Causes:

- Faulty Low Pressure Sensor.
- Short in Low Pressure Sensor wiring.
- Open in Low Pressure Sensor wiring.

TEST 18 – LOW PRESSURE SENSE

STEP	ACTION	YES	NO
1	HAS TEST 1 BEEN COMPLETED?	GO TO STEP 2.	PERFORM TEST 1.
2	IS THE REFRIGERANT SYSTEM PROPERLY CHARGED?	GO TO STEP 3.	RECHARGE SYSTEM AND RETEST.*
3	DISCONNECT LOW PRESSURE SENSOR CONNECTOR.** TURN IGNITION KEY ON. USING AN VOLTMETER, PROBE FOR 5V BETWEEN PIN 2 AND GROUND AT SENSOR CONNECTOR. **LOW PRESSURE SENSOR** CAV / COLOR / FUNCTION 1 / DB/GY / SENSOR GROUND 2 / PK/DB / 5V SUPPLY 3 / VT / SENSOR SIGNAL 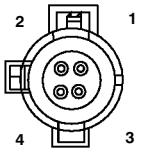 IS THE VOLTAGE APPROXIMATELY 5V?	GO TO STEP 4.	GO TO STEP 6.
4	RECONNECT LOW PRESSURE SENSOR. REMOVE HVAC CONTROL HEAD BUT DO NOT DISCONNECT.** TURN KEY ON. USING A VOLTMETER, BACKPROBE BETWEEN HVAC CONTROL HEAD C3 PIN 7 AND CHASSIS GROUND. **HVAC CONTROL HEAD - C3** CA / COLOR / FUNCTION 1V / DB / A/C HIGH PRESSURE SENSOR SIGNAL 7 / VT / A/C LOW PRESSURE SENSOR SIGNAL IS VOLTAGE PRESENT? (REFER TO CHART ON PREVIOUS PAGE).	GO TO STEP 5.	REPAIR OPEN IN LOW PRESSURE SENSOR RETURN LINE.*
5	PUT VEHICLE IN READY MODE. SET BLOWER AND A/C BUTTON TO ON. USING A VOLTMETER BACKPROBE BETWEEN HVAC CONTROL HEAD – C3 PIN 7 AND CHASSIS GROUND. DOES VOLTAGE CHANGE WHEN COMPRESSOR IS RUNNING?	REPLACE CONTROL HEAD.*	REPLACE LOW PRESSURE SENSOR.*
6	RECONNECT LOW PRESSURE SENSOR. REMOVE HVAC CONTROL HEAD BUT DO NOT DISCONNECT.** USING A VOLTMETER, BACKPROBE BETWEEN HVAC CONTROL HEAD – C1 PIN 5 AND CHASSIS GROUND. **HVAC CONTROL HEAD - C1** CAV / COLOR / FUNCTION 5 / PK/DB / 5V SUPPLY 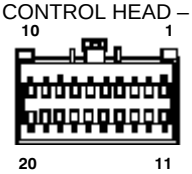 IS THE VOLTAGE APPROXIMATELY 5V?	GO TO STEP 7.	REPLACE CONTROL HEAD.*
7	DISCONNECT HVAC CONTROL HEAD – C1 CONNECTOR.** DISCONNECT INLINE CONNECTOR P30 / J01D CONNECTOR.** USING AN OHMMETER, PROBE BETWEEN CONTROL HEAD – C1 PIN 5 AND INLINE CONNECTOR P30 PIN 1 FOR CONTINUITY OR SHORT TO GROUND. **INLINE CONNECTOR P30** CAV / COLOR / FUNCTION 1 / PK/DB / 5V SUPPLY 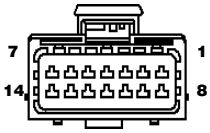 IS CIRCUIT OPEN OR SHORTED TO GROUND?	REPAIR CIRCUIT AS NECESSARY.*	GO TO STEP 8.

***Perform Verification TEST VER-1A. **Check connectors - Clean/repair as necessary.**

TEST 18 – LOW PRESSURE SENSE

STEP	ACTION	YES	NO
8	DISCONNECT LOW PRESSURE SENSOR CONNECTOR.** USING AN OHMMETER, PROBE BETWEEN INLINE CONNECTOR J01D PIN 1 AND LOW PRESSURE SENSOR CONNECTOR PIN 2 FOR CONTINUITY AND SHORT TO GROUND. **INLINE CONNECTOR J01D** CAV / COLOR / FUNCTION 1 / PK/DB / 5V SUPPLY 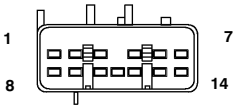 **LOW PRESSURE SENSOR CONNECTOR** CAV / COLOR / FUNCTION 1 / DB/GY / SENSOR GROUND 2 / PK/DB / 5V SUPPLY 3 / VT / SENSOR SIGNAL 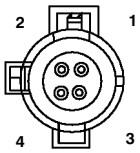 IS CIRCUIT OPEN OR SHORTED TO GROUND?	REPAIR CIRCUIT AS NECESSARY.*	REPLACE LOW PRESSURE SENSOR.*

***Perform Verification TEST VER-1A. **Check connectors - Clean/repair as necessary.**

THIS PAGE INTENTIONALLY LEFT BLANK

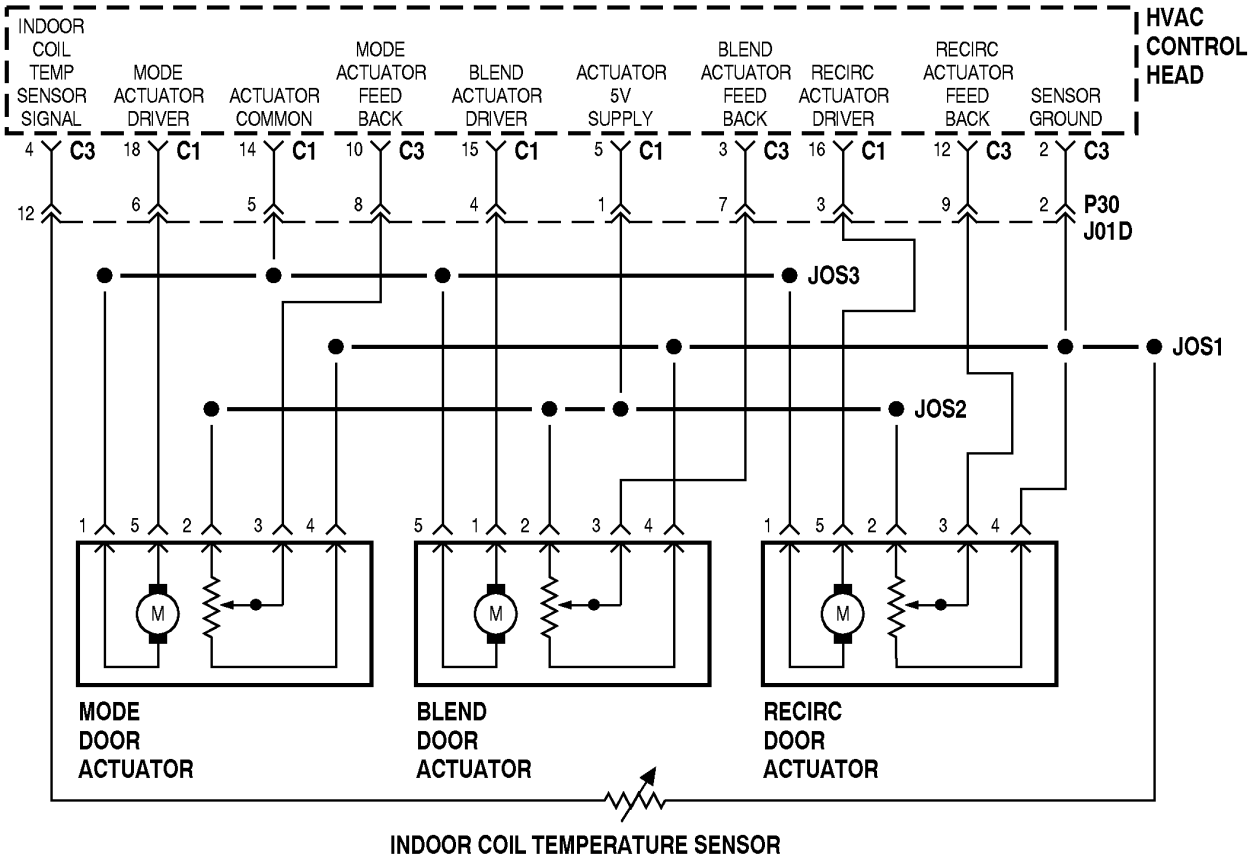

TEST 19 – MODE DOOR FEEDBACK

Description: The Mode Door Feedback is used to determine the Mode Actuator position. The feedback voltage increases as the Mode Actuator moves from Defrost to Panel mode. If this code sets the system will drive to the Defrost mode.

Detection: Whenever the vehicle is in Ready mode.

Possible Causes:

- Faulty Mode Actuator.
- Short in Mode Actuator wiring.
- Open in Mode Actuator wiring.

TEST 19 – MODE ACTUATOR FEEDBACK

STEP	ACTION	YES	NO
1	HAS TEST 1 BEEN COMPLETED?	GO TO STEP 2.	PERFORM TEST 1.
2	REMOVE HVAC CONTROL HEAD BUT DO NOT DISCONNECT.** PLACE VEHICLE IN READY MODE. **HVAC CONTROL HEAD – C3** CAV / COLOR / FUNCTION 2 / DB/GY / SENSOR GROUND 10 / YL / MODE ACTUATOR FEEDBACK 11 / BK/LG / GROUND 12 / GY / RECIRCULATION ACTUATOR FEEDBACK 6 1 12 7 USING AN VOLTMETER, BACKPROBE HVAC CONTROL HEAD CONNECTOR C3 PIN 10 WITH THE MODE SELECTOR IN THE DEFROST POSITION. IS THE VOLTAGE APPROXIMATELY 0.5 VOLTS?	GO TO STEP 3.	GO TO STEP 4.
3	MOVE THE MODE SELECTOR FROM DEFROST POSITION TO PANEL POSITION, WHILE READING THE VOLTMETER. DOES THE VOLTAGE INCREASE TO APPROXIMATELY 4.5 VOLTS?	REPLACE MODE DOOR ACTUATOR.*	GO TO STEP 4.
4	REMOVE INLINE CONNECTOR P30 / J01D.** USING AN OHMMETER, MEASURE THE RESISTANCE BETWEEN HVAC CONTROL HEAD CONNECTOR – C3 PIN 10 AND INLINE CONNECTOR P30 PIN 8. **INLINE CONNECTOR P30 / J01D** CAV / COLOR / FUNCTION 1 / PK/DB / ACTUATOR 5V REFERENCE 8 / YL / MODE ACTUATOR FEEDBACK 9 / GY / RECIRC FEEDBACK 7 1 14 8 P30 1 7 8 14 J01D IS THE RESISTANCE GREATER THAN 10.0 OHMS?	REPAIR OPEN IN THE MODE DOOR ACTUATOR CIRCUIT.*	GO TO STEP 5.
5	USING AN OHMMETER, MEASURE THE RESISTANCE BETWEEN INLINE CONNECTOR P30 PIN 8 AND GROUND AND BETWEEN INLINE CONNECTOR J01D PIN 8 AND GROUND. IS THE RESISTANCE LESS THAN 5.0 OHMS?	REPAIR SHORT TO GROUND IN THE MODE DOOR ACTUATOR CIRCUIT.*	GO TO STEP 6.
6	USING AN OHMMETER, MEASURE THE RESISTANCE BETWEEN MODE ACTUATOR PIN 3 AND INLINE CONNECTOR J01D PIN 8. **MODE DOOR ACTUATOR** CAV / FUNCTION 1 / ACTUATOR COMMON 2 / 5V SUPPLY 3 / MODE ACTUATOR FEEDBACK 4 / SENSOR GROUND 5 / MODE ACTUATOR FEEDBACK 5 1 IS THE RESISTANCE GREATER THAN 10.0 OHMS?	REPAIR OPEN IN THE MODE DOOR FEEDBACK CIRCUIT.*	GO TO STEP 7.
7	USING AN OHMMETER, MEASURE THE RESISTANCE BETWEEN MODE DOOR ACTUATOR PIN 3 AND GROUND. IS THE RESISTANCE LESS THAN 5.0 OHMS?	REPAIR SHORT TO GROUND IN THE MODE DOOR ACTUATOR CIRCUIT.*	REPLACE HVAC CONTROL HEAD.*

***Perform Verification TEST VER-1A. **Check connectors - Clean/repair as necessary.**

TEST 20 – NO RESPONSE FROM HVAC CONTROL

STEP	ACTION	YES	NO
1	HAS TEST 1 BEEN COMPLETED?	GO TO STEP 2.	PERFORM TEST 1.
2	DO THE LED'S ON THE HVAC CONTROL HEAD SYSTEM FUNCTION NORMALLY?	GO TO STEP 7.	GO TO STEP 3.
3	CHECK FUSE 17 IN POWER DISTRIBUTION CENTER. IS FUSE BLOWN?	REPLACE FUSE.*	GO TO STEP 4.
4	REMOVE HVAC CONTROL HEAD. REMOVE HVAC CONNECTOR – C1.** PLACE VEHICLE IN READY MODE. USING A VOLTMETER, MEASURE THE VOLTAGE AT PIN A1. **HVAC CONTROL HEAD - C1** CAV / COLOR / FUNCTION 1 / DB / PILOT LINE SENSE 3 / PK / A/C CONTROLLER RELAY CONTROL 5 / PK/DB / ACTUATOR 5V SUPPLY 7 / WT/BK / CCD BUS (–) 8 / VT/BR / CCD BUS (+) 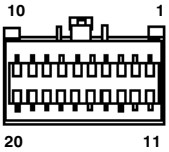 IS THE VOLTAGE GREATER THAN 10.0 VOLTS?	GO TO STEP 5.	REPAIR OPEN IN IGNITION VOLTAGE CIRCUIT.*
5	USING AN OHMMETER, MEASURE THE RESISTANCE BETWEEN C1 PIN 3 AND CHASSIS GROUND. IS THE RESISTANCE GREATER THAN 5.0 OHMS?	REPAIR OPEN IN THE HVAC GROUND CIRCUIT.*	GO TO STEP 6.
6	USING AN OHMMETER, MEASURE THE RESISTANCE BETWEEN C1 PIN 5 AND CHASSIS GROUND. IS THE RESISTANCE GREATER THAN 5.0 OHMS?	REPAIR OPEN IN THE HVAC GROUND CIRCUIT.*	GO TO STEP 7.
7	DISABLE TRACTION BATTERY PACK BY TURNING THE SERVICE DISCONNECT SWITCH TO OFF. REMOVE HVAC CONTROL HEAD. REMOVE HVAC CONNECTOR – C1.** CONNECT A JUMPER WIRE BETWEEN CCD BUS (+) CKT AND GROUND. USING THE SCAN TOOL, PERFORM THE CCD BUS TEST. DOES THE SCAN TOOL SHOW "SHORT TO GROUND?"	GO TO STEP 8.	REPAIR THE OPEN CCD BUS (+) CIRCUIT.*
8	CONNECT THE JUMPER WIRE BETWEEN CCD BUS (–) CIRCUIT AND GROUND. USING THE SCAN TOOL, PERFORM THE CCD BUS TEST. DOES THE SCAN TOOL SHOW "SHORT TO GROUND?"	REPLACE HVAC CONTROL HEAD.*	REPAIR THE OPEN CCD BUS (–) CIRCUIT.*

***Perform Verification TEST VER-1A. **Check connectors - Clean/repair as necessary.**

THIS PAGE INTENTIONALLY LEFT BLANK

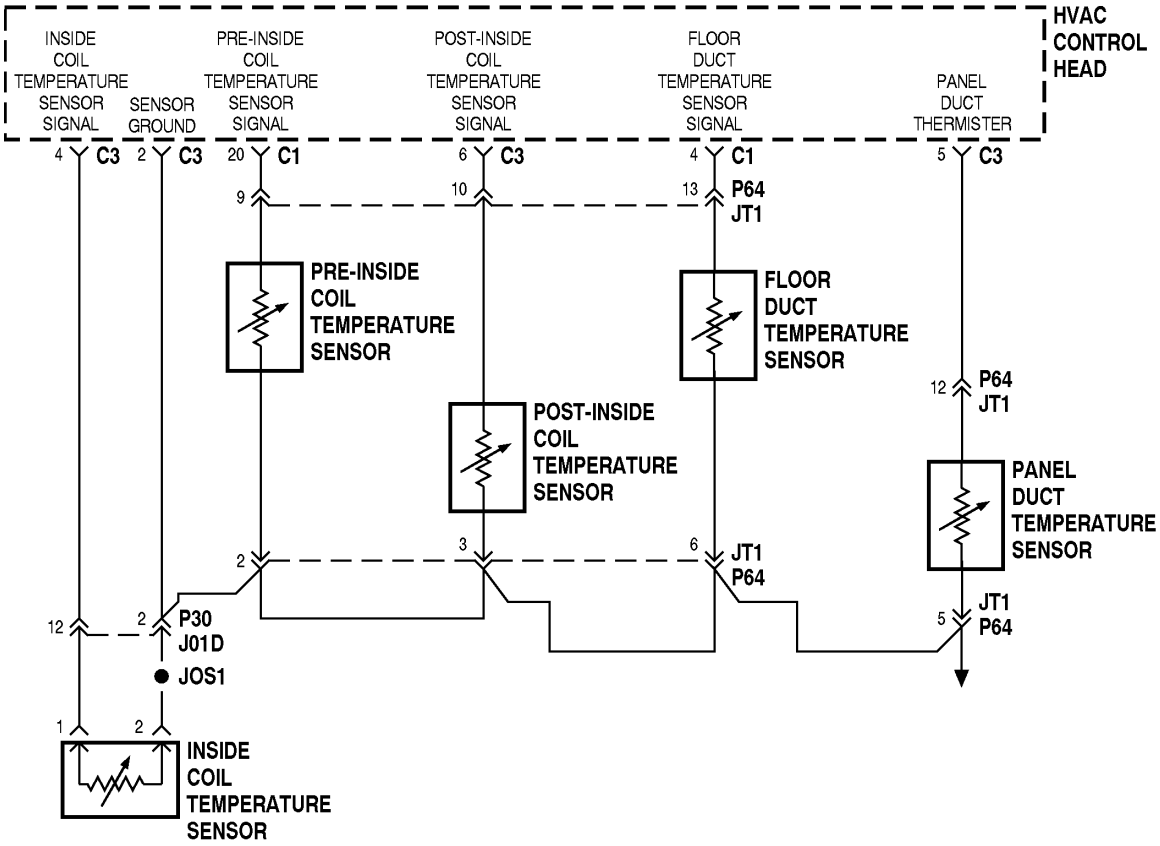

TEST 21 – PANEL THERMISTOR

Description: The HVAC control head uses this thermistor to monitor the temperature of the air at the outlet of the panel ducts. This code will set and the PTC heater will be disabled if the PANEL thermistor is out of range.

Detection: Whenever the vehicle is in Ready mode.

Possible Causes:

- Faulty Panel Temperature sensor.
- Short in Panel Temperature sensor wiring.
- Open in Panel Temperature sensor wiring.

Temp. (°F)	Temp. (°C)	Nominal Resistance (kΩ)
–40	–40	332.8
–22	–30	175.5
–4	–20	96.5
14	–10	55.1
32	0	32.6
50	10	19.9
68	20	12.5

Temp. (°F)	Temp. (°C)	Nominal Resistance (kΩ)
86	30	8.1
104	40	6.3
122	50	3.8
140	60	2.5
158	70	1.7
176	80	1.3
194	90	0.92

TABLE 4 – PANEL THERMISTOR

TEST 21 – PANEL THERMISTOR

STEP	ACTION	YES	NO
1	HAS TEST 1 BEEN COMPLETED?	GO TO STEP 2.	PERFORM TEST 1.
2	REMOVE HVAC CONTROL HEAD. DISCONNECT C3 CONNECTOR.** USING AN OHMMETER MEASURE THE RESISTANCE BETWEEN C3 PIN 5 AND C3 PIN 2. COMPARE RESULTS WITH THE TABLE ON THE PREVIOUS PAGE. **HVAC CONTROL HEAD – C3** CAV / COLOR / FUNCTION 2 / DB/GY / SENSOR RETURN 3 / RD/WT / BLEND AIR ACTUATOR FEEDBACK 4 / DB/OR / INDOOR COIL TEMPERATURE SENSOR SIGNAL 5 / LG / PANEL DUCT THERMISTOR 9 / YL / SUCTION LINE TEMPERATURE SENSOR NO. 1 SIGNAL 6 1 12 7 IS THE RESISTANCE WITHIN RANGE?	REPLACE HVAC CONTROL HEAD.*	GO TO STEP 3.
3	REMOVE INLINE CONNECTOR P64 / JT1.** USING AN OHMMETER MEASURE THE RESISTANCE BETWEEN JT1 PIN 12 AND JT1 PIN 5. COMPARE RESULTS WITH THE TABLE ON THE PREVIOUS PAGE. **INLINE CONNECTOR JT1** CAV / COLOR / FUNCTION 2 / DB/GY / SENSOR RETURN DB/GY / SENSOR RETURN 5 / DB/GY / SENSOR RETURN DB/GY / SENSOR RETURN 9 / LG/BK / EVAP INPUT THERIMISTOR 12 / LG / PANEL DUCT THERMISTOR 1 7 8 14 IS THE RESISTANCE WITHIN RANGE?	REPAIR WIRING BETWEEN HVAC UNIT AND CONTROL HEAD.*	REPLACE PANEL THERMISTOR.*

***Perform Verification TEST VER-1A. **Check connectors - Clean/repair as necessary.**

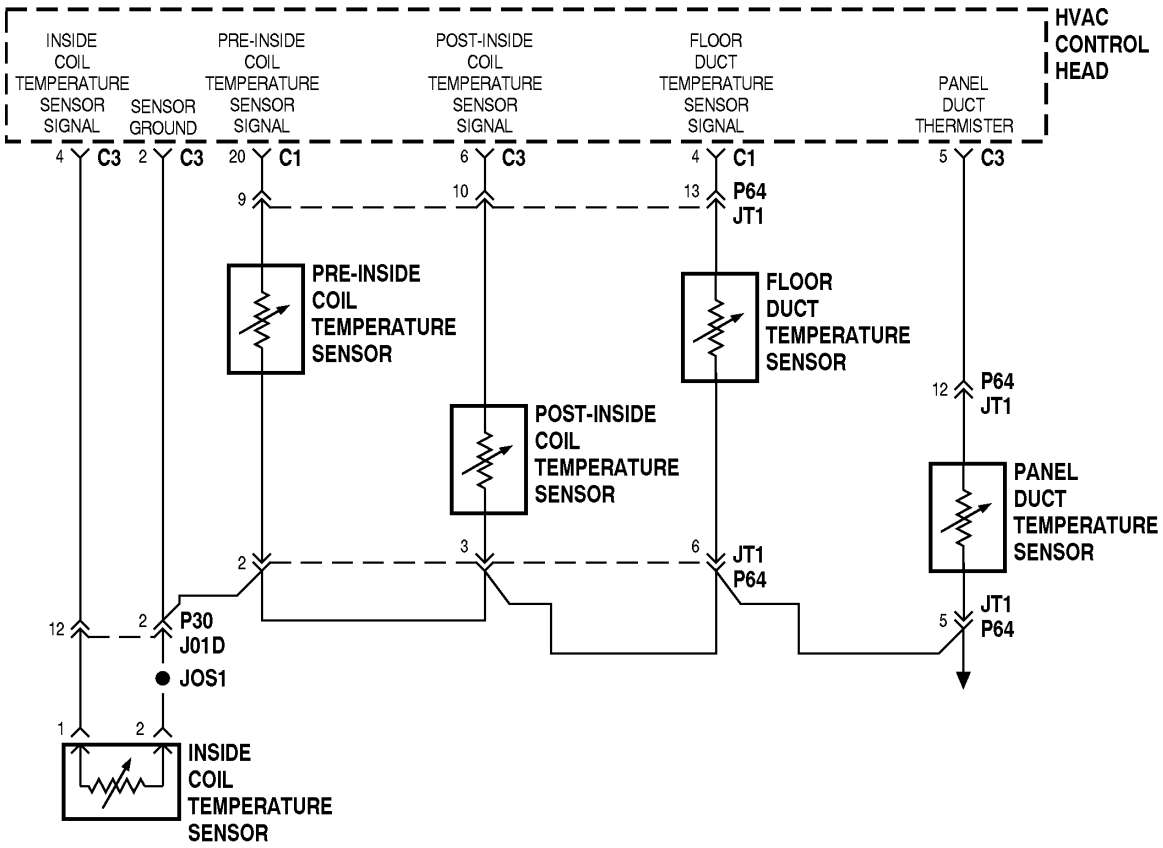

TEST 22 – POST – INSIDE COIL THERMISTOR

Description: The HVAC control head uses this thermistor to monitor the air temperature out of the inside coil. This code sets when the post– inside coil thermistor is out of range.

Detection: Whenever the vehicle is in Ready mode.

Possible Causes:

- Faulty post – inside Coil temperature sensor.
- Short in post – inside coil temperature sensor wiring.
- Open in post – inside coil temperature sensor wiring.

Temp. (°F)	Temp. (°C)	Nominal Resistance (kΩ)
–40	–40	332.8
–22	–30	175.5
–4	–20	96.5
14	–10	55.1
32	0	32.6
50	10	19.9
68	20	12.5

Temp. (°F)	Temp. (°C)	Nominal Resistance (kΩ)
86	30	8.1
104	40	6.3
122	50	3.8
140	60	2.5
158	70	1.7
176	80	1.3
194	90	0.92

TABLE 5 – POST INSIDE COIL THERMISTOR

TEST 22 – POST – INSIDE COIL THERMISTOR

STEP	ACTION	YES	NO
1	HAS TEST 1 BEEN COMPLETED?	GO TO STEP 2.	PERFORM TEST 1.
2	REMOVE HVAC CONTROL HEAD. DISCONNECT HVAC CONTROL C3 CONNECTOR.** USING AN OHMMETER, MEASURE THE RESISTANCE BETWEEN C3 PIN 6 AND C3 PIN 2. COMPARE RESULTS WITH THE TABLE ON THE PREVIOUS PAGE. **HVAC CONTROL HEAD – C3** CAV / COLOR / FUNCTION 2 / DB/GY / SENSOR RETURN 6 / BR / POST – INSIDE COIL THERMISTOR SIGNAL 11 / BK/LG / GROUND 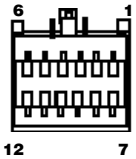 IS THE RESISTANCE WITHIN RANGE?	REPLACE HVAC CONTROL HEAD.*	GO TO STEP 3.
3	REMOVE INLINE CONNECTOR P64 / JT1.** USING AN OHMMETER, MEASURE THE RESISTANCE BETWEEN JT1 PIN 10 AND JT1 PIN 3. COMPARE RESULTS WITH THE TABLE ON THE PREVIOUS PAGE. **INLINE CONNECTOR JT1** CAV / COLOR / FUNCTION 3 / DB/GY / SENSOR RETURN 10 / BR / POST – INSIDE COIL THERMISTOR SIGNAL 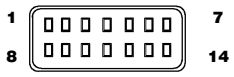 IS THE RESISTANCE WITHIN RANGE?	REPAIR WIRING BETWEEN POST INSIDE COIL THERMISTOR AND CONTROL HEAD.*	REPLACE POST INSIDE COIL THERMISTOR.*

***Perform Verification TEST VER-1A. **Check connectors - Clean/repair as necessary.**

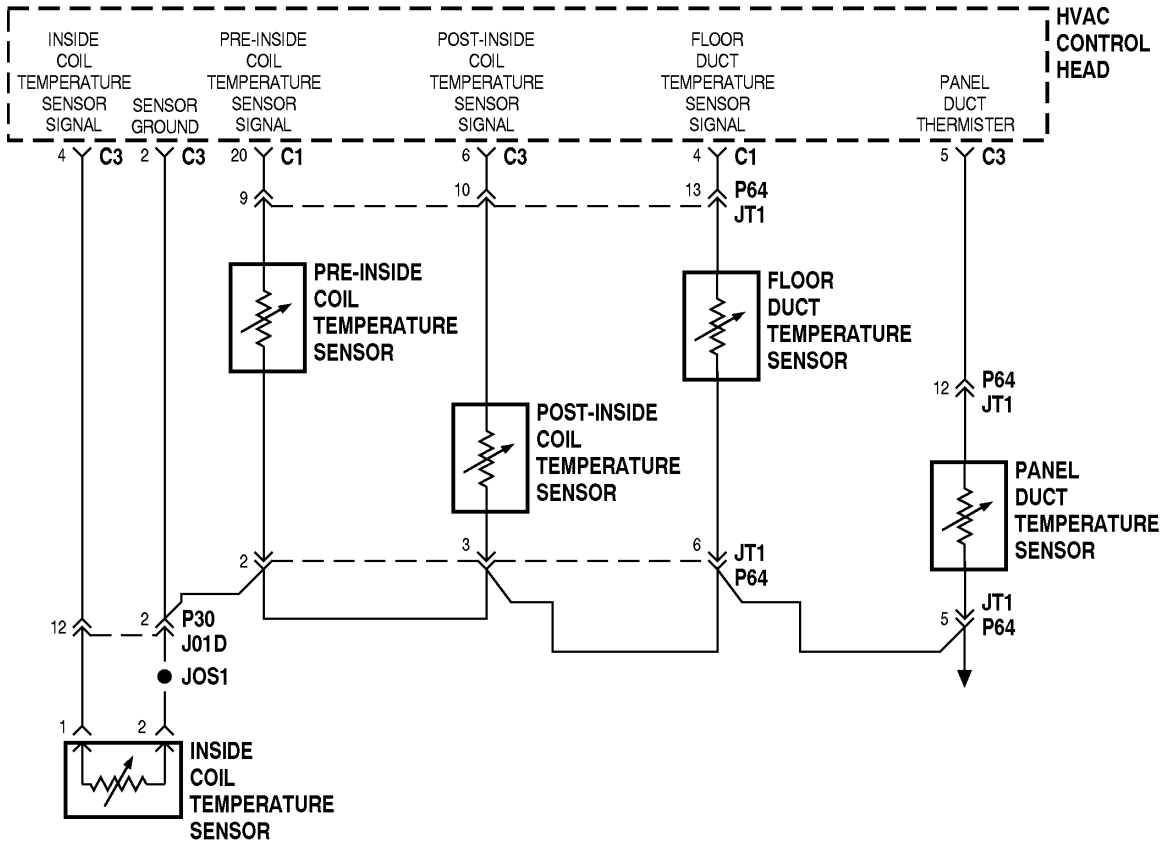

TEST 23 – PRE – INSIDE COIL THERMISTOR

Description: The HVAC control head uses this thermistor to monitor the air temperature flowing into the inside coil. This code sets when the pre – inside coil thermistor is out of range.

Detection: Whenever the vehicle is in Ready mode.

Possible Causes:

- Faulty pre – inside Coil temperature sensor.
- Short in pre – inside coil temperature sensor wiring.
- Open in pre – inside coil temperature sensor wiring.

Temp. (°F)	Temp. (°C)	Nominal Resistance (kΩ)
–40	–40	332.8
–22	–30	175.5
–4	–20	96.5
14	–10	55.1
32	0	32.6
50	10	19.9
68	20	12.5

Temp. (°F)	Temp. (°C)	Nominal Resistance (kΩ)
86	30	8.1
104	40	6.3
122	50	3.8
140	60	2.5
158	70	1.7
176	80	1.3
194	90	0.92

TABLE 6 – PRE – INSIDE COIL THERMISTOR

TEST 23 – PRE – INSIDE COIL THERMISTOR

STEP	ACTION	YES	NO
1	HAS TEST 1 BEEN COMPLETED?	GO TO STEP 2.	PERFORM TEST 1.
2	REMOVE HVAC CONTROL HEAD. DISCONNECT HVAC CONTROL HEAD C1 CONNECTOR.** USING AN OHMMETER, MEASURE THE RESISTANCE BETWEEN C1 PIN 20 AND C3 PIN 2. COMPARE RESULTS WITH THE TABLE ON THE PREVIOUS PAGE. **HVAC CONTROL HEAD - C1** CAV: 20 — COLOR: LG/BK — FUNCTION: PRE–INSIDE COIL THERMISTOR SIGNAL 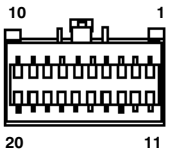 **HVAC CONTROL HEAD – C3** CAV: 2 — COLOR: DB/GY — FUNCTION: SENSOR RETURN CAV: 11 — COLOR: BK/LG — FUNCTION: GROUND 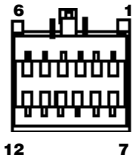 IS THE RESISTANCE WITHIN RANGE?	REPLACE HVAC CONTROL HEAD.*	GO TO STEP 3.
3	REMOVE INLINE CONNECTOR P64 / JT1.** USING AN OHMMETER, MEASURE THE RESISTANCE BETWEEN JT1 PIN 9 AND JT1 PIN 2. COMPARE RESULTS WITH THE TABLE ON THE PREVIOUS PAGE. **INLINE CONNECTOR JT1** CAV: 2 — COLOR: DB/GY — FUNCTION: SENSOR RETURN CAV: 9 — COLOR: LG/BK — FUNCTION: PRE – INSIDE COIL THERMISTOR SIGNAL 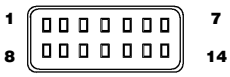 IS THE RESISTANCE WITHIN RANGE?	REPAIR WIRING BETWEEN PRE – INSIDE COIL THERMISTOR AND CONTROL HEAD.*	REPLACE PRE – INSIDE COIL THERMISTOR.*

***Perform Verification TEST VER-1A. **Check connectors - Clean/repair as necessary.**

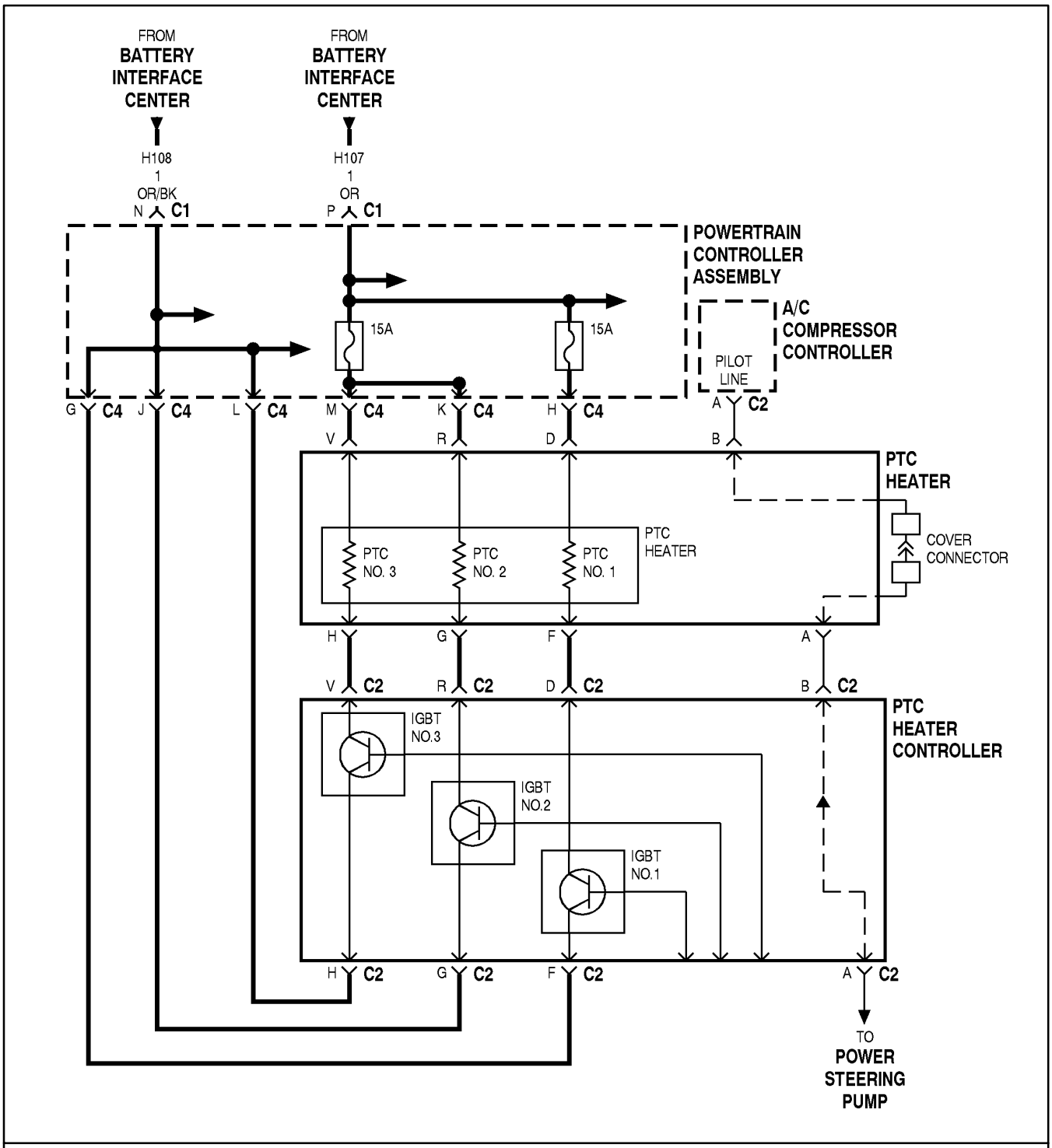

TEST 24 – PTC BANK 1 OPEN DETECT

Description: The PTC bank 1 feedback signal is used to detect an open circuit from the PTC controller. If this code sets, PTC banks 1 & 2 will be disabled.

Detection: Whenever the vehicle is in Ready mode.

Possible Causes:

- IGBT shorted.
- Short in IGBT wiring.
- Open in IGBT wiring.

TEST 24 – PTC BANK 1 OPEN DETECT

STEP	ACTION	YES	NO
1	HAS TEST 1 BEEN COMPLETED?	GO TO STEP 2.	PERFORM TEST 1.
2	IS FAULT “IGBT SHORT DETECT” SET?	REPAIR “IGBT SHORT DETECT” FIRST AND RETEST.*	GO TO STEP 3.
3	CHECK HIGH VOLTAGE PTC 1 FUSE. IS FUSE BLOWN?	GO TO STEP 4.	GO TO STEP 7.
4	DISCONNECT PTC HEATER CONNECTOR (LOCATED AT BULKHEAD NEAR MASTER CYLINDER).** USING AN OHMMETER, MEASURE THE RESISTANCE FROM PDB BUS BAR TO PTC HEATER CONNECTOR PIN F. **PTC HEATER** CAV / COLOR / FUNCTION D / PK / HIGH VOLTAGE DC (+) F / LB/DB / HIGH VOLTAGE DC (–) G / RD/DB / HIGH VOLTAGE DC (–) H / PK/DB / HIGH VOLTAGE DC (–) R / RD / HIGH VOLTAGE DC (+) V / LB / HIGH VOLTAGE DC (+) 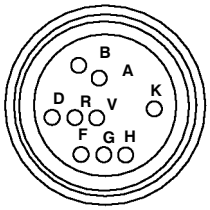 IS RESISTANCE LESS THAN 1KΩ?	REPLACE PTC HEATER.*	GO TO STEP 5.
5	REPLACE FUSE, RECONNECT PTC HEATER CONNECTOR AND VERIFY REPAIR. USING A SCAN TOOL ERASE HVAC DTC “PTC BANK 1 OPEN DETECT”. DOES DTC RESET?	GO TO STEP 6.	REPAIR COMPLETED.*
6	DISCONNECT PTC HEATER CONNECTOR.** USING AN OHMMETER, PROBE FOR RESISTANCE BETWEEN PIN F AND PIN D. **PTC HEATER** CAV / COLOR / FUNCTION D / PK / HIGH VOLTAGE DC (+) F / LB/DB / HIGH VOLTAGE DC (–) G / RD/DB / HIGH VOLTAGE DC (–) H / PK/DB / HIGH VOLTAGE DC (–) R / RD / HIGH VOLTAGE DC (+) V / LB / HIGH VOLTAGE DC (+) 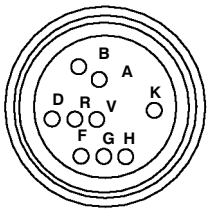 IS RESISTANCE LESS THAN 50 Ω ?	REPLACE PTC HEATER.*	CALL EPIC HOT LINE.*
7	DISCONNECT HVAC CONTROL HEAD – C2.** DISCONNECT PTC HEATER CONTROLLER – C1.** USING AN OHMMETER, PROBE FOR CONTINUITY BETWEEN HVAC CONTROL HEAD – C2 PIN 2 AND PTC CONTROLLER – C1 PIN 7. **HVAC CONTROL HEAD - C2** CAV / COLOR / FUNCTION 2 / BK/PK / IGBT SHORT SENSE 5 / BK / GROUND 8 / YL / A/C COMPRESSOR CONTROLLER MUX SIGNAL SENSE 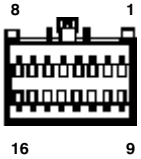 **PTC HEATER CONTROLLER - C1** CAV / COLOR / FUNCTION 7 / BK/PK / IGBT SHORT SENSE 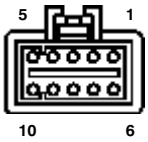 IS CONTINUITY PRESENT?	REPLACE PTC HEATER CONTROLLER.*	REPAIR OPEN IN SENSE CIRCUIT.*

***Perform Verification TEST VER-1A. **Check connectors - Clean/repair as necessary.**

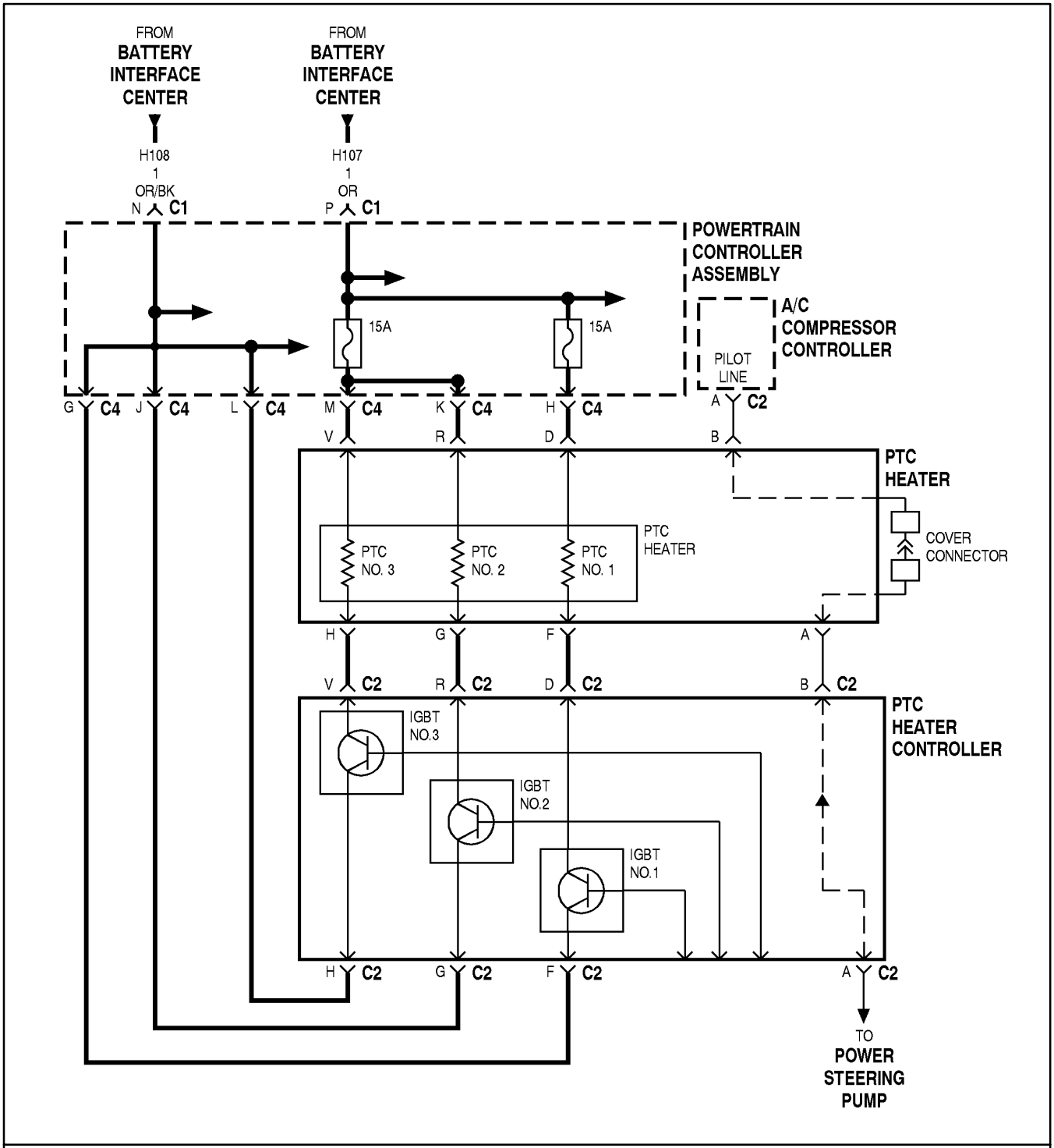

TEST 25 – PTC BANK 2 OPEN DETECT

Description: The PTC bank 2 feedback signal is used to detect an open circuit from the PTC controller. If this code sets, PTC banks 1 & 2 will be disabled.

Detection: Whenever the vehicle is in Ready mode.

Possible Causes:

- IGBT shorted.
- Short in IGBT wiring.
- Open in IGBT wiring.

TEST 25 – PTC BANK 2 OPEN DETECT

STEP	ACTION	YES	NO
1	HAS TEST 1 BEEN COMPLETED?	GO TO STEP 2.	PERFORM TEST 1.
2	IS DTC “IGBT SHORT DETECT” SET?	REPAIR “IGBT SHORT DETECT” FIRST AND RETEST.*	GO TO STEP 3.
3	REMOVE PDB COVER. CHECK HIGH VOLTAGE PTC 2 AND 3 FUSE. IS FUSE BLOWN?	GO TO STEP 4.	GO TO STEP 7.
4	DISCONNECT PTC HEATER CONNECTOR (LOCATED AT BULKHEAD NEAR MASTER CYLINDER).** USING AN OHMMETER, MEASURE THE RESISTANCE FROM PDB BUS BAR TO PTC HEATER CONNECTOR PIN G. **PTC HEATER CONNECTOR** CAV / COLOR / FUNCTION D / PK / HIGH VOLTAGE DC (+) F / LB/DB / HIGH VOLTAGE DC (–) G / RD/DB / HIGH VOLTAGE DC (–) H / PK/DB / HIGH VOLTAGE DC (–) R / RD / HIGH VOLTAGE DC (+) V / LB / HIGH VOLTAGE DC (+) B A K D R V F G H IS RESISTANCE LESS THAN 1K Ω ?	REPLACE PTC HEATER.*	GO TO STEP 5.
5	REPLACE FUSE AND VERIFY REPAIR. USING THE SCAN TOOL, ERASE HVAC DTC “PTC BANK 2 OPEN DETECT.” DOES DTC RESET?	GO TO STEP 6.	REPAIR COMPLETED.*
6	DISCONNECT PTC HEATER CONNECTOR.** USING AN OHMMETER, PROBE FOR RESISTANCE FROM PIN G TO PIN R. **PTC HEATER CONNECTOR** CAV / COLOR / FUNCTION D / PK / HIGH VOLTAGE DC (+) F / LB/DB / HIGH VOLTAGE DC (–) G / RD/DB / HIGH VOLTAGE DC (–) H / PK/DB / HIGH VOLTAGE DC (–) R / RD / HIGH VOLTAGE DC (+) V / LB / HIGH VOLTAGE DC (+) B A K D R V F G H IS RESISTANCE LESS THAN 50 Ω ?	REPLACE PTC HEATER.*	CALL EPIC HOT LINE.*
7	DISCONNECT HVAC CONTROL HEAD – C2.** DISCONNECT PTC HEATER CONTROLLER – C1.** USING AN OHMMETER PROBE FOR CONTINUITY BETWEEN HVAC CONTROL HEAD – C2 PIN 2 AND PTC CONTROLLER – C1 PIN 7. **HVAC CONTROL HEAD - C2** CAV / COLOR / FUNCTION 2 / BK/PK / IGBT SHORT SENSE 5 / BK / GROUND 8 / YL / A/C COMPRESSOR CONTROL MUX SIGNAL 8 1 16 9 **PTC HEATER CONTROLLER - C1** CAV / COLOR / FUNCTION 7 / BK/PK / IGBT SHORT SENSE 5 1 10 6 IS CONTINUITY PRESENT?	REPLACE PTC HEATER CONTROLLER.*	REPAIR OPEN IN SENSE CIRCUIT.*

***Perform Verification TEST VER-1A. **Check connectors - Clean/repair as necessary.**

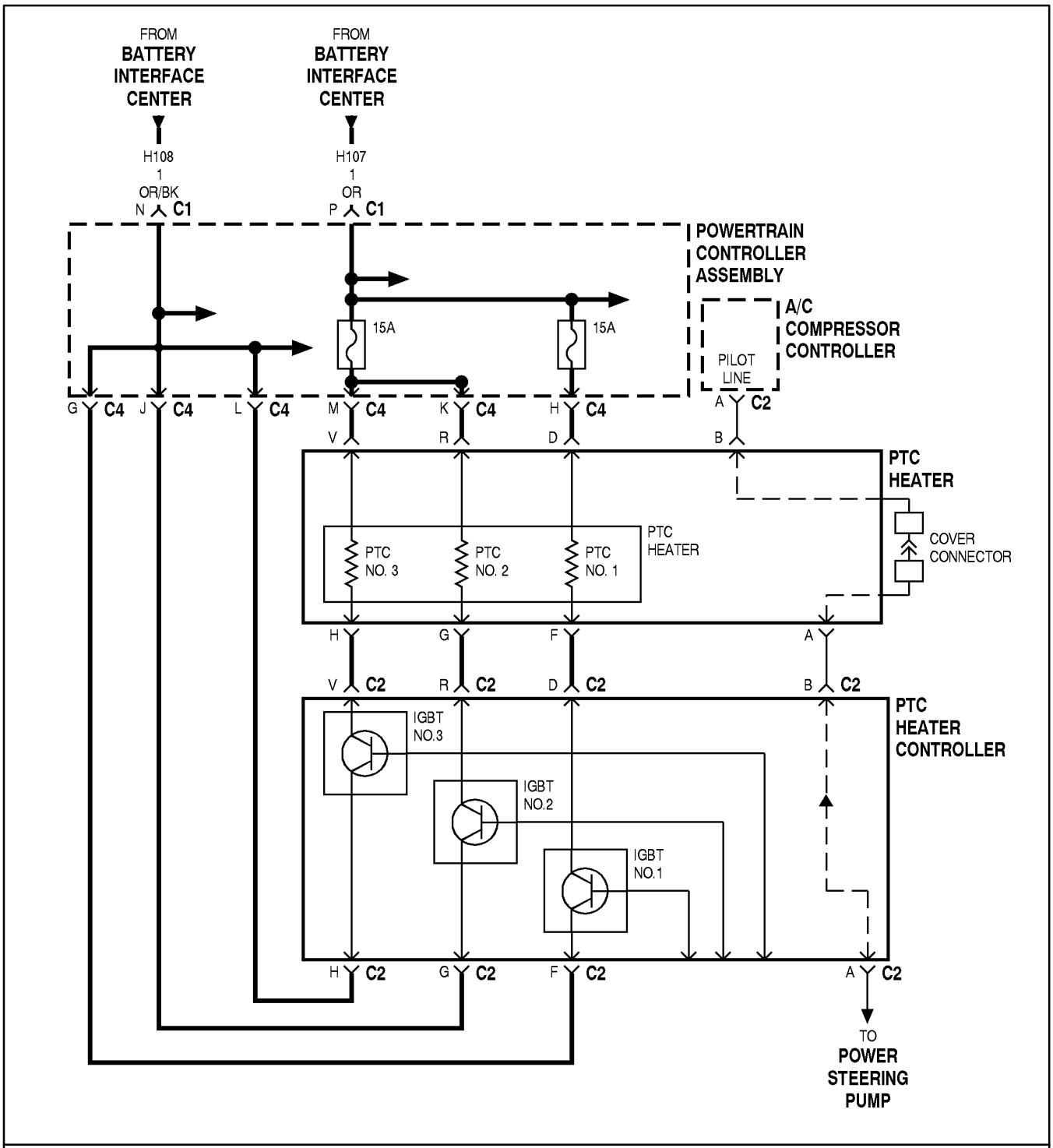

TEST 26 – PTC BANK 3 OPEN DETECT

Description: The PTC bank 2 feedback signal is used to detect an open circuit from the PTC controller. If this code sets, PTC bank 3 will be disabled.

Detection: Whenever the vehicle is in Run mode.

Possible Causes:

- IGBT shorted.
- Short in IGBT wiring.
- Open in IGBT wiring.

TEST 26 – PTC BANK 3 OPEN DETECT

STEP	ACTION	YES	NO
1	HAS TEST 1 BEEN COMPLETED?	GO TO STEP 2.	PERFORM TEST 1.
2	IS FAULT “IGBT SHORT DETECT” SET?	REPAIR “IGBT SHORT DETECT” CODE FIRST AND RETEST.*	GO TO STEP 3.
3	REMOVE PDB COVER. CHECK HIGH VOLTAGE PTC 2 AND 3 FUSE. IS FUSE BLOWN?	GO TO STEP 4.	GO TO STEP 7.
4	DISCONNECT PTC HEATER CONNECTOR (LOCATED AT BULKHEAD NEAR MASTER CYLINDER).** USING AN OHMMETER, MEASURE THE RESISTANCE FROM PDB BUS BAR TO PTC HEATER CONNECTOR PIN H. PTC HEATER CONNECTOR CAV / COLOR / FUNCTION D / PK / HIGH VOLTAGE DC (+) F / LB/DB / HIGH VOLTAGE DC (–) G / RD/DB / HIGH VOLTAGE DC (–) H / PK/DB / HIGH VOLTAGE DC (–) R / RD / HIGH VOLTAGE DC (+) V / LB / HIGH VOLTAGE DC (+) IS RESISTANCE LESS THAN 1KΩ ?	REPLACE PTC HEATER.*	GO TO STEP 5.
5	REPLACE FUSE AND VERIFY REPAIR. USING THE SCAN TOOL, ERASE HVAC DTC “PTC BANK 3 OPEN DETECT.” DOES DTC RESET?	GO TO STEP 6.	REPAIR COMPLETED.*
6	DISCONNECT PTC HEATER CONNECTOR.** USING AN OHMMETER, PROBE FOR RESISTANCE FROM PIN H TO PIN V. PTC HEATER CONNECTOR CAV / COLOR / FUNCTION D / PK / HIGH VOLTAGE DC (+) F / LB/DB / HIGH VOLTAGE DC (–) G / RD/DB / HIGH VOLTAGE DC (–) H / PK/DB / HIGH VOLTAGE DC (–) R / RD / HIGH VOLTAGE DC (+) V / LB / HIGH VOLTAGE DC (+) IS RESISTANCE LESS THAN 50Ω ?	REPLACE PTC HEATER.*	CALL EPIC HOT LINE.*
7	DISCONNECT HVAC CONTROL HEAD – C2.** DISCONNECT PTC HEATER CONTROLLER – C1.** USING AN OHMMETER PROBE FOR CONTINUITY BETWEEN HVAC CONTROL HEAD – C2 PIN 2 AND PTC CONTROLLER – C1 PIN 7. HVAC CONTROL HEAD - C2 CAV / COLOR / FUNCTION 2 / BK/PK / IGBT SHORT SENSE 5 / BK / GROUND 8 / YL / A/C COMPRESSOR CONTROL MUX SIGNAL PTC HEATER CONTROLLER - C1 CAV / COLOR / FUNCTION 7 / BK/PK / IGBT SHORT SENSE IS CONTINUITY PRESENT?	REPLACE PTC HEATER CONTROLLER.*	REPAIR OPEN IN SENSE CIRCUIT.*

***Perform Verification TEST VER-1A. **Check connectors - Clean/repair as necessary.**

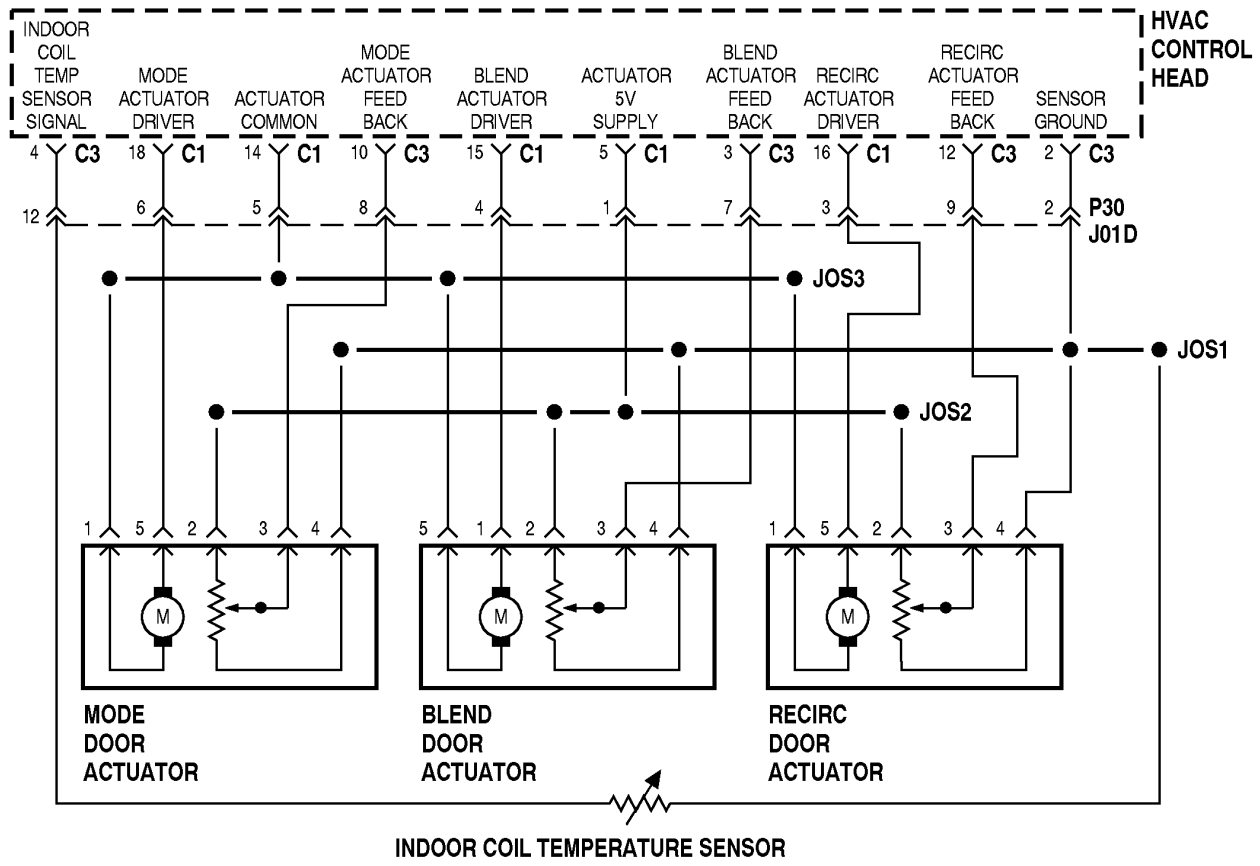

TEST 27 – RECIRC ACTUATOR FEEDBACK

Description: The RECIRC Door feedback is used to determine the RECIRC Door position. The feedback voltage increases as the RECIRC Door moves from Fresh to Recirculated air mode. If this code sets, the system will drive to full Fresh.

Detection: Whenever the vehicle is in Ready mode.

Possible Causes:

- Faulty RECIRC Door actuator.
- Short in RECIRC Door actuator wiring.
- Open in RECIRC Door actuator wiring.

TEST 27 – RECIRC ACTUATOR FEEDBACK

STEP	ACTION	YES	NO
1	HAS TEST 1 BEEN COMPLETED?	GO TO STEP 2.	PERFORM TEST 1.
2	REMOVE HVAC CONTROL HEAD BUT DO NOT DISCONNECT.** PLACE VEHICLE IN READY MODE. PLACE SYSTEM IN FRESH MODE. USING A VOLTMETER, BACKPROBE BETWEEN HVAC CONTROL HEAD CONNECTOR – C3 PIN 12 AND CHASSIS GROUND. **HVAC CONTROL HEAD – C3** CAV / COLOR / FUNCTION 2 / DB/GY / SENSOR GROUND 10 / YL / MODE ACTUATOR FEEDBACK 11 / BK / GROUND 12 / GY / RECIRCULATION ACTUATOR FEEDBACK 6 1 12 7 IS THE VOLTAGE APPROXIMATELY 2.0 VOLTS?	GO TO STEP 3.	GO TO STEP 4.
3	DEPRESS THE RECIRC BUTTON, WHILE READING THE VOLTMETER. DOES THE VOLTAGE INCREASE TO APPROXIMATELY 4.0 VOLTS?	REPLACE RECIRC DOOR ACTUATOR.*	GO TO STEP 4.
4	REMOVE INLINE CONNECTOR P30 / J01D.** USING AN OHMMETER, MEASURE THE RESISTANCE BETWEEN HVAC CONTROL HEAD CONNECTOR – C3 PIN 12 AND INLINE CONNECTOR P30 PIN 9. **INLINE CONNECTOR P30 / J01D** CAV / COLOR / FUNCTION 1 / PK/DB / ACTUATOR 5V REFERENCE 8 / YL / MODE ACTUATOR FEEDBACK 9 / GY / RECIRC FEEDBACK 7 1 14 8 P30 1 7 8 14 J01D IS THE RESISTANCE GREATER THAN 10.0 OHMS?	REPAIR OPEN IN THE RECIRC DOOR FEEDBACK CIRCUIT.*	GO TO STEP 5.
5	USING AN OHMMETER, MEASURE THE RESISTANCE BETWEEN P30 PIN 9 AND GROUND AND BETWEEN J01D PIN 9 AND GROUND. IS THE RESISTANCE LESS THAN 5.0 OHMS?	REPAIR SHORT TO GROUND IN THE RECIRC DOOR FEEDBACK CIRCUIT.*	GO TO STEP 6.

***Perform Verification TEST VER-1A. **Check connectors - Clean/repair as necessary.**

TEST 27 – RECIRC ACTUATOR FEEDBACK

STEP	ACTION	YES	NO
6	USING AN OHMMETER, MEASURE THE RESISTANCE BETWEEN RECIRC DOOR ACTUATOR PIN 3 AND INLINE CONNECTOR J01D PIN 9. **INLINE CONNECTOR J01D** CAV / COLOR / FUNCTION 1 / PK/DB / ACTUATOR 5V REFERENCE 8 / YL / MODE ACTUATOR FEEDBACK 9 / GY / RECIRC FEEDBACK 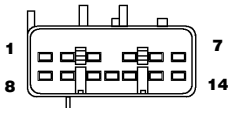 **RECIRC DOOR ACTUATOR** CAV / COLOR / FUNCTION 1 / DB/RD / RECIRC DOOR ACTUATOR DRIVER 2 / PK/DB / ACTUATOR 5V SUPPLY 3 / RD/WT / RECIRC DOOR ACTUATOR FEEDBACK 4 / DB/GY / SENSOR GROUND 5 / DG/WT / ACTUATOR COMMON 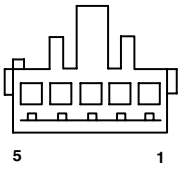 IS THE RESISTANCE GREATER THAN 10.0 OHMS?	REPAIR OPEN IN THE RECIRC DOOR FEEDBACK CIRCUIT.*	GO TO STEP 7.
7	USING AN OHMMETER, MEASURE THE RESISTANCE BETWEEN RECIRCULATION DOOR ACTUATOR PIN 3 AND GROUND. IS THE RESISTANCE LESS THAN 5.0 OHMS?	REPAIR SHORT TO GROUND IN THE RECIRC DOOR FEEDBACK CIRCUIT.*	REPLACE HVAC CONTROL HEAD.*

***Perform Verification TEST VER-1A. **Check connectors - Clean/repair as necessary.**

THIS PAGE INTENTIONALLY LEFT BLANK

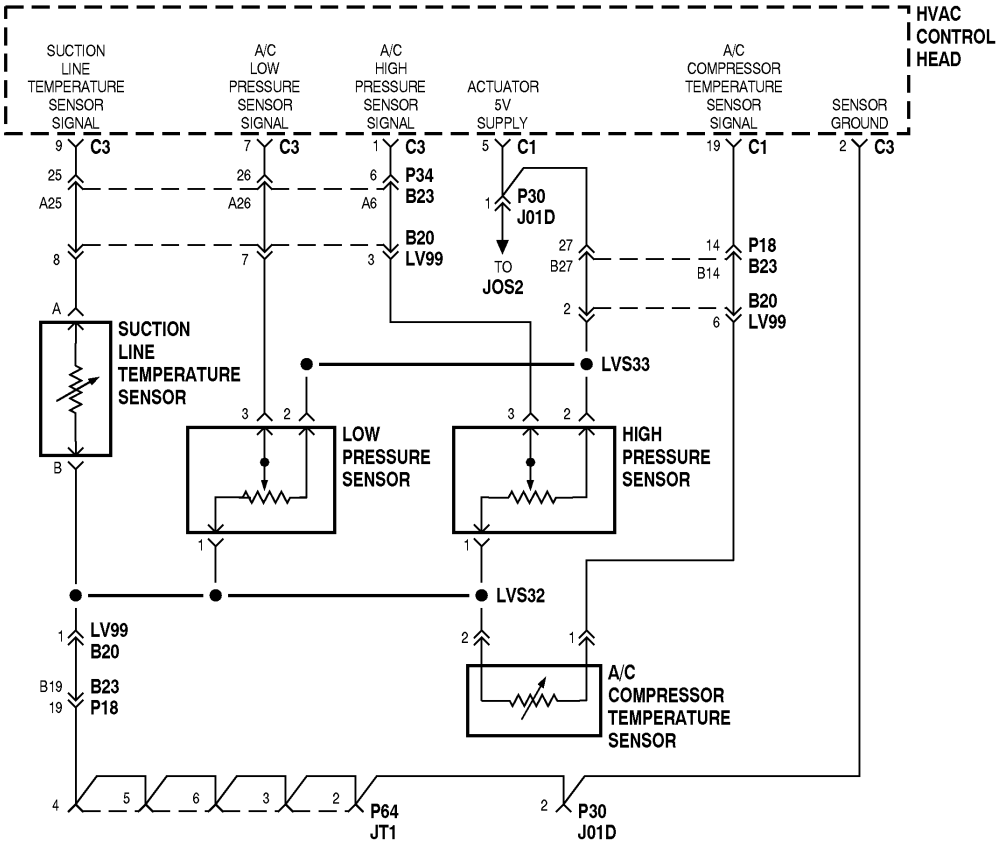

TEST 28 – SUCTION THERMISTOR

Description: The HVAC control head uses this thermistor to monitor the temperature of the refrigerant in the suction line. This code will set and the compressor will be disabled if the suction line thermistor is out of range.

Detection: Whenever the vehicle is in Ready mode.

Possible Causes:

- Faulty Suction Temperature sensor.
- Short in Suction Temperature sensor wiring.
- Open in Suction Temperature sensor wiring.

Temp. (°F)	Temp. (°C)	Nominal Resistance (kΩ)
–40	–40	32.8
–22	–30	17.4
–4	–20	9.6
14	–10	5.5
32	0	3.3
50	10	2.0
68	20	1.2

Temp. (°F)	Temp. (°C)	Nominal Resistance (kΩ)
86	30	0.8
104	40	0.5
122	50	0.4
140	60	0.25
158	70	0.18
176	80	0.13
194	90	0.09

TABLE 7 – SUCTION THERMISTOR

TEST 28 – SUCTION THERMISTOR

STEP	ACTION	YES	NO
1	HAS TEST 1 BEEN COMPLETED?	GO TO STEP 2.	PERFORM TEST 1.
2	REMOVE HVAC CONTROL HEAD. DISCONNECT HVAC CONTROL HEAD – C3 CONNECTOR.** USING AN OHMMETER, MEASURE THE RESISTANCE BETWEEN C3 PIN 9 AND C3 PIN 2. COMPARE RESULTS WITH THE TABLE ON THE PREVIOUS PAGE. **HVAC CONTROL HEAD – C3** CAV / COLOR / FUNCTION 2 / DB/GY / SENSOR GROUND 9 / YL / SUCTION LINE TEMPERATURE SENSOR SIGNAL 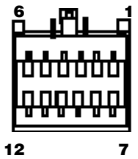 IS THE RESISTANCE WITHIN RANGE?	REPLACE HVAC CONTROL HEAD.*	GO TO STEP 3.
3	REMOVE INLINE CONNECTOR LV99 / B20.** USING AN OHMMETER, MEASURE THE RESISTANCE BETWEEN B20 PINS 1 AND 8. COMPARE RESULTS WITH THE TABLE ON THE PREVIOUS PAGE. **INLINE CONNECOTR B20** CAV / COLOR / FUNCTION 2 / DB/GY / SENSOR GROUND 9 / YL / SUCTION LINE TEMPERATURE SENSOR SIGNAL 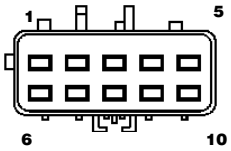 IS THE RESISTANCE WITHIN RANGE?	REPAIR WIRING BETWEEN INLINE CONNECTOR B20 AND HVAC CONTROL HEAD.*	GO TO STEP 4.
4	DISCONNECT SUCTION LINE THERMISTOR CONNECTOR.** USING AN OHMMETER, MEASURE THE RESISTANCE BETWEEN SUCTION LINE THERMISTOR PINS A AND B. COMPARE THE RESULTS WITH THE TABLE ON THE PREVIOUS PAGE. **SUCTION LINE THERMISTOR** CAV / COLOR / FUNCTION A / YL / SUCTION LINE TEMPERATURE SENSOR SIGNAL B / DB/GY / SENSOR GROUND 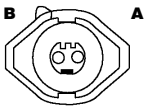 IS THE RESISTANCE WITHIN RANGE?	REPAIR WIRING BETWEEN INLINE CONNECTOR LV99 AND SUCTION THERMISTOR.*	REPLACE SUCTION THERMISTOR.*

***Perform Verification TEST VER-1A. **Check connectors - Clean/repair as necessary.**

TEST VER–1A – VERIFICATION TEST

1. Leave the Scan Tool connected to the Data Link Connector (DLC).

   Reconnect any disconnected components.

   Reconnect Auxiliary Battery Negative Cable (if disconnected).

   Enable the Traction Battery Pack by turning the Service Disconnect Switch to the On position.

   Place vehicle in Ready Mode.

   With the Scan Tool, erase all trouble codes.

2. Road test the vehicle.

3. Check for trouble codes after the road test.

   If a trouble code sets during the road test, perform TEST 1.

   If no trouble codes set during the test, return the vehicle to the customer.

DIAGNOSTIC CHARTS

COMPRESSOR		
CONDITION	**POSSIBLE CAUSE**	**CORRECTION**
Compressor will not start.	1. Ambient temperature reads less than 40˚F. Use scan tool to read.	1. If ambient temperature is less than 40˚F this is normal. If ambient temperature is above 40˚F, monitor with SCAN TOOL to see if sensor is reading accurately. If ambient sensor is giving an inaccurate reading, replace sensor.
	2. High voltage fuse blown.	2. Replace high voltage fuse.
	3. No low voltage to compressor controller.	3. Check for +12V at pin 10 of low voltage connector of compressor controller (violet wire). If no +12V at pin 10 of low voltage connector of compressor controller, then check compressor relay at PDC. For more information on compressor relay, refer to standard NS Service Manual. If relay is OK then control head is failing to complete the circuit to close the relay.
	4. Pilot line open.	4. If the pilot line is open, the compressor will not operate. Monitor the pilot sensing signal on the SCAN TOOL.
	5. No duty signal from control head. Possible bad wire or software shutdown, compressor fault or control head bad.	5. Check for 100Hz, 12V PWM signal from control head to controller (pin 9 on low voltage connector-light blue) with oscilloscope. Monitor duty signal on scan tool. Check for continuity in wire. If wire is good, replace control head.
	6. BEMS load shed.	6. Monitor SCAN TOOL for load shed message.
	7. Check HVAC system faults. (no charge etc.)	7. Reset fault codes.

COMPRESSOR (CONTINUED)		
CONDITION	**POSSIBLE CAUSE**	**CORRECTION**
Compressor runs only at low speed.	1. Low inside coil load. No problem with system.	1. A/C monitor fin probe. Fin probe should read less than 40˚F. If in H/P, monitor suction superheat. Superheat should be less than 100 counts.
	2. Low refrigerant charge (check fault code).	2. Monitor suction superheat, EXV position and compressor duty in high blower and fresh air with ambient above 21˚C (70˚F). If superheat is greater than −7˚C (20˚F) and EXV position is 255 counts and compressor duty is minimum (7%), then charge is low. Find and fix leak, reclaim charge, evacuate and recharge with full charge. If no leak is found, add refrigerant in 2oz increments until subcooling is in correct charge range.
Compressor stalls at high speed.	1. Discharge pressure too high.	1. Under normal operation, the compressor should not stall. Monitor discharge pressure at stall condition. If in A/C mode maximum discharge pressure is 325 PSIG, compare transducer reading on SCAN TOOL to a calibrated gauge connected at the discharge service port to check the transducer. The transducer and gauge should agree within ± 15 PSI. If transducer is not working properly, it must be replaced.
	2. Improperly functioning controller.	2. Replace controller.
Compressor is noisy.	1. Low oil charge.	1. Low oil charge will cause the compressor to make more noise than normal. See EPIC lubricant check procedure.

ELECTRONIC EXPANSION VALVE (EXV)		
CONDITION	**POSSIBLE CAUSE**	**CORRECTION**
EXV not modulating.	1. Loss of PWM signal from control head.	1. Monitor EXV duty signal from SCAN TOOL. If control head is requesting a duty signal, check for the signal with a milliamp meter placed in series with the line to the EXV. The EXV should draw between 50 and 500 mA proportional to the duty request.
	2. Valve jammed.	2. If duty signal is being sent and superheat is not at 6˚F, then valve may be jammed with debris. Try to free the valve by reversing the flow from A/C to H/P and back. If this does not work, replace valve.
	3. Low refrigerant charge. Check faults. If no air is passing across the coil, heat will not transfer.	3. If the HVAC has a low refrigerant charge, the duty signal will be 255 counts and the superheat will be 15˚F or more. This condition may also occur if there is a very high inside coil load in A/C mode 43˚C (110˚F) or above inlet air. Therefore, the check for low charge should be done at inlet air temperatures less than 35˚C (95˚F).
	4. Open/shorted solenoid valve.	4. Nominal resistance of the solenoid coil is 22±2.2 ohms. If the coil is open or shorted, the valve will not operate. Replace solenoid coil.

FOUR-WAY REVERSING VALVE		
CONDITION	**POSSIBLE CAUSE**	**CORRECTION**
Valve will not shift from cool to heat or from heat to cool.	1. Check faults and clear. 2. No voltage to coil. 3. Defective coil. 4. Low charge. 5. Pilot valve okay. Dirt in one bleeder hole. 6. Clogged pilot tubes. 7. Both parts of pilot open (back seat part did not close). 8. Defective compressor.	1. Retest, if fault resets continue. 2. Repair electrical circuit. 3. If resistance is less than 1052 ohms replace coil. 4. Repair leak, recharge system. 5. Unplug solenoid, raise head pressure by operating compressor, plug solenoid back in to break dirt loose. 6. Raise head pressure by operating compressor, operate solenoid to free. If still no shift, replace valve. 7. Raise head pressure, operate solenoid to free partially clogged part. If still no shaft, replace valve. 8. Replace compressor.
Starts to shift but does not complete reversal.	1. Piston needle on end of slide leaking. 2. Pilot needle and piston needle leaking.	1. Operate valve several times then recheck. If excessive leak, replace valve. 2. Operate valve several times then recheck. If excessive leak, replace valve.
Apparent leak in heating.	1. Body damage. 2. Both parts of pilot open. 3. Valve hung up at mid-stroke. Pumping volume of compressor not sufficient to maintain reversal due to slow compressor duty (less than 7%). Use scan tool to check.	1. Replace valve. 2. Raise head pressure, operate solenoid. If no shift, replace valve. 3. Raise head pressure, operate solenoid. If no shift, replace valve.

PTC HEATER CORE		
CONDITION	**POSSIBLE CAUSE**	**CORRECTION**
PTC heater will not come on.	1. Fuses blown.	1. Check and/or replace.
	2. Pilot line is open.	2. Check for proper connection of the pilot line or a pilot open error On the SCAN TOOL.
	3. Floor, Panel or Post heater thermistor failure.	3. If any of these thermistors fail, the control head will disable the PTC heater. These thermistors perform safety features related to the PTC heater. Failures of these thermistors can be detected by a message on the SCAN TOOL. The resistance of each thermistor can be measured directly with an ohmmeter at the thermistor harness connector located at the top of the HVAC unit under the dash. The resistance value can be compared to the resistance versus temperature table values listed in this service manual.
	4. Ambient temperature greater than 29˚C (85˚F) (Ambient temperature sensor failure).	4. The control head will disable the PTC heater at ambient temperatures above 29˚C (85˚F). A false reading of 29˚C (85˚F) or greater by the ambient sensor will also lead to a disabling of the PTC heater. The ambient sensor can be monitored over the SCAN TOOL. **Note: The maximum ambient operating temperature of the PTC heater may change.**
	5. HVAC blower driver failure.	5. The control head can sense a failure of the inside blower driver signal that comes from the control head. In this case the PTC heater will be disabled and a blower driver failure message will be sent over the CCD bus. For failure modes related to the inside blower refer to HVAC diagnostics.

PTC HEATER CORE (continued)		
CONDITION	**POSSIBLE CAUSE**	**CORRECTION**
PTC heater will not turn Off.	1. IGBT short in PTC heater controller.	1. The failure mode of the IGBTs in the PTC heater controller is too short. In this case the PTC heater or a portion of the PTC heater will not shut off until the key is turned Off. Once an IGBT short is detected, the control head will send a message over the CCD bus. A temporary fix is to remove the high voltage fuses to the PTC. This will allow vehicle operation without the battery drain of the PTC. The permanent repair for this failure is to replace the PTC controller. The vehicle will not be able to charge until this is corrected.
	2. PTC heater driver short.	2. A short in one of the PTC drive signals from the control head to the PTC controller will cause a portion of the PTC controller to remain On until the vehicle is keyed Off. The control head will send a message over the CCD bus when a PTC driver short is detected.

SHUT–OFF VALVE		
CONDITION	**POSSIBLE CAUSE**	**CORRECTION**
Solenoid will not open.	1. Check faults and clear. 2. No voltage to coil. 3. Defective coil.	1. Retest, if fault resets continue. 2. Repair electrical circuit. 3. If resistance is less than 1052 ohms replace coil.

STANDARD PROCEDURES

CHARGE LEVEL CHECK OR FILL

NOTE: Special effort must be used to prevent moisture from entering the A/C system oil. Moisture in the oil is very difficult to remove and will cause a reliability problem with the compressor.

CAUTION: Do not overcharge refrigerant system, as excessive compressor head pressure can cause noise and system failure.

After the system has been tested for leaks and evacuated, a refrigerant (R–134a) charge can be injected into the system.

NOTE: When connecting the service equipment coupling to the line fitting, verify that the valve of the coupling is fully closed. This will reduce the amount of effort required to make the connection.

NOTE: The amount of R–134a refrigerant that the air conditioning system holds is 1.14 kg (2.5 lb.).

WARNING: AVOID BREATHING A/C REFRIGERANT AND LUBRICANT VAPOR OR MIST. EXPOSURE MAY IRRITATE EYES, NOSE AND THROAT. USE ONLY APPROVED SERVICE EQUIPMENT MEETING SAE REQUIREMENTS TO DISCHARGE R–134A SYSTEM. IF ACCIDENTAL SYSTEM DISCHARGE OCCURS, VENTILATE WORK AREA BEFORE RESUMING SERVICE.

WARNING: R–134A SERVICE EQUIPMENT OR VEHICLE A/C SYSTEM SHOULD NOT BE PRESSURE TESTED OR LEAK TESTED WITH COMPRESSED AIR. SOME MIXTURES OF AIR/R–134A HAVE BEEN SHOWN TO BE COMBUSTIBLE AT ELEVATED PRESSURES. THESE MIXTURES ARE POTENTIALLY DANGEROUS AND MAY RESULT IN FIRE OR EXPLOSION CAUSING INJURY OR PROPERTY DAMAGE.

(1) Connect a reclaim/recycle unit or a manifold gauge set.
(2) Measure refrigerant (refer to capacities) and heat to 52°C (125°F) with the charging station. Refer to the instructions provided with the equipment being used.

NOTE: REFRIGERANT CAPACITY 1.14 Kg (2.5 lb.)

(3) Open the suction and discharge valves. Open the charge valve to allow the heated refrigerant to flow into the system. When the transfer of refrigerant has stopped, close the suction and discharge valve.
(4) If all of the charge did not transfer from the dispensing device, set the A/C control to A/C, low blower speed and windows open.
(5) Open the suction valve to allow the remaining refrigerant to transfer to the system.

CAUTION: Take care not to open the discharge (high pressure) valve at this time.

(6) Close all valves and test the A/C system performance.
(7) Disconnect the charging station or manifold gauge set. Install the service port caps.

LOW REFRIGERANT LEVEL LEAK TEST

(1) Determine if there is any R–134A refrigerant in the system. Use the scan tool under the menu Systems Sensors–A/C Pressure test or pressure gauge liquid line temperature partial charge check. See “System Charge Level Check or Fill” for procedure.
(2) Position the vehicle in a wind-free work area. This will aid in detecting small leaks.
(3) Bring the refrigerant system up to operating temperature and pressure. This is done by putting the vehicle in the RUN mode for five minutes with the system set to the following:
- (a) Transaxle in Park.
- (b) A/C Controls Set in 100% outside air.
- (c) Full PANEL Mode.
- (d) Blower motor on High.
- (e) A/C in the On position.
- (f) Front windows open.

CAUTION: A leak detector designed for R–12 refrigerant will not detect leaks in a R–134a refrigerant system.

(4) Shut off the vehicle and wait two to seven minutes. Then use an Electronic Leak Detector that is designed to detect R–134a type refrigerant and search for leaks. Fittings, lines or components that appear to be oily usually indicate a refrigerant leak.

LOW REFRIGERANT LEVEL LEAK TEST (Continued)

To inspect the inside coil core for leaks, insert the leak detector probe into the recirculating air door opening or a heat duct. If a thorough leak check has been completed without indication of a leak, proceed to System Charge Level–Check or Fill.

REFRIGERANT OIL LEVEL CHECK

When an air conditioning system is first assembled, all components (except the compressor) are refrigerant oil free. After the system has been charged with R–134a refrigerant and operated, the oil in the compressor is dispersed through the lines and components. The inside coil, outside coil and filter–drier will retain a significant amount of oil. For proper dryer amounts refer to the Refrigerant Oil Capacities chart. When a component is replaced, the specified amount of refrigerant oil must be added. When the compressor is replaced, the amount of oil that is retained in the rest of the system must be drained from the compressor. When a line or component has failed and oil has escaped, the compressor should be removed and drained. The filter–dryer must be replaced along with the failed part. The oil capacity of the system, minus the amount of oil still in the remaining components equals the amount to be added to the system.

Example: If the total capacity of the system components equals 270 ml (9.0 oz) subtract 180 ml (6.0 oz) for the remaining components.

270 ml minus 180 ml = 90 ml (3.0 oz). The amount added to the system would be 90 ml (3.0 oz).

CAUTION: The refrigerant oil used in an R–134a A/C system is unique. Use only ESTER compressor oil.

REFRIGERANT SYSTEM EVACUATION

NOTE: Special effort must be used to prevent moisture from entering the A/C system oil. Moisture in the oil is very difficult to remove and will cause a reliability problem with the compressor.

If a compressor designed to use R–134a refrigerant is left open to the atmosphere for an extended period of time, it is recommended that the refrigerant oil be drained and replaced with new oil or a new compressor be used. This will eliminate the possibility of contaminating the refrigerant system.

If the refrigerant system has been open to the atmosphere, it must be evacuated before the system can be filled. Moisture and air mixed with the refrigerant will raise the compressor head pressure above acceptable operating levels. This will reduce the performance of the air conditioner and damage the compressor. Moisture will boil at near room temperature when exposed to vacuum. To evacuate the refrigerant system:

NOTE: When connecting the service equipment coupling to the line fitting, verify that the valve of the coupling is fully closed. This will reduce the amount of effort required to make the connection.

(1) Connect a suitable charging station, refrigerant recovery machine and a manifold gauge set with vacuum pump.
(2) Open the suction and discharge valves and start the vacuum pump. The vacuum pump should run a minimum of 45 minutes prior to charge to eliminate all moisture in system. When the suction gauge reads –88 kPa (–26 in. Hg) vacuum or greater for 45 minutes, close all valves and turn Off vacuum pump. If the system fails to reach specified vacuum, the refrigerant system likely has a leak that must be corrected. If the refrigerant system maintains specified vacuum for 30 minutes, start the vacuum pump, open the suction and discharge valves. Then allow the system to evacuate an additional 10 minutes.
(3) Close all valves. Turn Off and disconnect the vacuum pump.
(4) The refrigerant system is prepared to be charged with refrigerant.

SERVICING REFRIGERANT OIL LEVEL

(1) Using a refrigerant recovery machine, remove refrigerant from the A/C system.
(2) Remove refrigerant lines from A/C compressor.
(3) Remove compressor from vehicle.
(4) From suction port on the side of compressor, drain refrigerant oil from compressor.
(5) Add system capacity minus the capacity of the components that have not been replaced through the suction port on compressor. Refer to Refrigerant Oil Capacity chart.
(6) Install compressor, connect refrigerant lines, evacuate and charge refrigerant system.

STICKING HVAC CONTROL HEAD PUSH BUTTONS

To service HVAC control head push buttons that are sticking, spray between the buttons with Mopar® MP–50. The MP–50 is an all purpose lubricant for mechanical and electrical uses. After spraying around the push buttons, wipe any excess off the radio bezel and HVAC control head push buttons. Operate the buttons to ensure that they are operating freely.

SYSTEM LEAK CHECKING

WARNING: R–134A SERVICE EQUIPMENT OR VEHICLE A/C SYSTEM SHOULD NOT BE PRESSURE TESTED OR LEAK TESTED WITH COMPRESSED AIR. SOME MIXTURES OF AIR/R–134A HAVE BEEN SHOWN TO BE COMBUSTIBLE AT ELEVATED PRESSURES. THESE MIXTURES ARE POTENTIALLY DANGEROUS AND MAY RESULT IN FIRE OR EXPLOSION CAUSING INJURY OR PROPERTY DAMAGE.

If the A/C system is not cooling properly, determine if the refrigerant system is fully charged with R–134a. This is accomplished by performing a “System Charge Level–Check or Fill.” If while performing this test A/C liquid line pressure is less than 207 kPa (30 psi), proceed to Empty Refrigerant System Leak Test. If liquid line pressure is greater than 207 kPa (30 psi) proceed to Low Refrigerant Leak Level Test. If the refrigerant system is empty or low in refrigerant charge, a leak at any line fitting or component seal is likely. A review of the fittings, lines and components for oily residue is an indication of the leak location. To detect a leak in the refrigerant system, perform one of the following procedures as indicated by the symptoms.

WARNING: AVOID BREATHING A/C REFRIGERANT AND LUBRICANT VAPOR OR MIST. EXPOSURE MAY IRRITATE EYES, NOSE AND THROAT. USE ONLY APPROVED SERVICE EQUIPMENT MEETING SAE REQUIREMENTS TO DISCHARGE R-134A SYSTEM. IF ACCIDENTAL DISCHARGE OCCURS, VENTILATE WORK AREA BEFORE RESUMING SERVICE.

(1) Evacuate the refrigerant system to the lowest degree of vacuum possible (about –28 in Hg). Determine if the system holds a vacuum for 15 minutes. If vacuum is held, a leak is probably not present. If system will not maintain vacuum level, continue this procedure.
(2) Prepare a 0.284 Kg (10 oz) refrigerant charge to be injected into the system.
(3) Connect and dispense 0.284 Kg (10 oz) of refrigerant into the evacuated refrigerant system.
(4) Proceed to step two of Low Refrigerant Level Leak Test.

In order to use the temperature probe, a digital thermometer will be required. If a digital thermometer is not available, an adapter is available through the Professional Service Equipment program. It can convert any standard digital multimeter into a thermometer. This adapter is designed to accept any standard K–type thermocouple.

If a digital multimeter is not available, it to can be ordered through the Professional Service Equipment program.

COMPONENT SERVICE

A/C AUXILIARY OUTSIDE COIL

REMOVAL

(1) Disable the traction battery pack by turning the high voltage service disconnect switch to Off.
(2) Disconnect and isolate the auxiliary battery negative cable.
(3) Remove cooling module. Refer to “Cooling Module Removal”, this group.
(4) Remove A/C auxiliary outside coil to outside coil line. Be careful not to damage O ring seals.
(5) Remove A/C filter dryer to auxiliary outside coil line. Be careful not to damage O ring seals.
(6) Remove A/C auxiliary outside coil mounting screws (3).
(7) Remove A/C auxiliary outside coil (fig. 2).

A/C AUXILIARY OUTSIDE COIL (Continued)

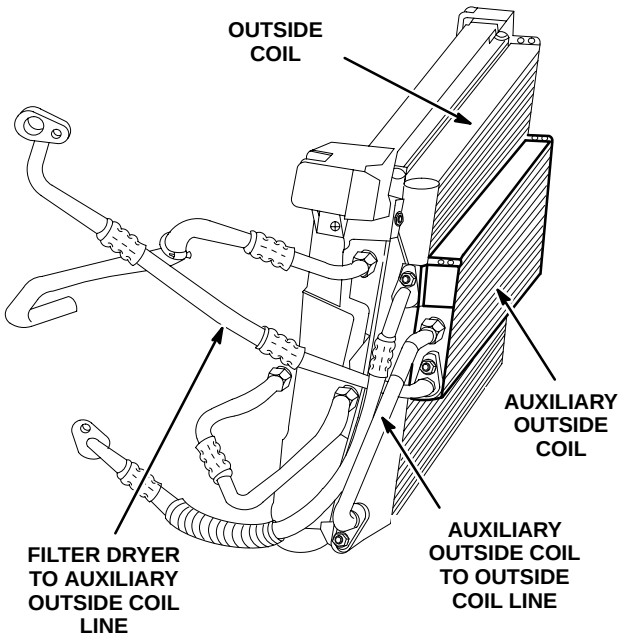

Fig. 2 Auxiliary Outside Coil

INSTALLATION

(1) Install A/C auxiliary outside coil.
(2) Install A/C auxiliary outside coil mounting screws (3). Torque to 5.1 ± 1.1 N•m (45 ± 10 in. lbs.).
(3) Install A/C lines and tighten. Torque to 20.3 ± 3.4 N•m (180 ± 30 in. lbs.).
(4) Install cooling module.
(5) Fill turbine oil. Refer to “Oil Fill Procedure” in powertrain group 9.
(6) Connect auxiliary battery negative cable.
(7) Enable the traction battery pack by turning the high voltage service disconnect switch to On.
(8) Charge A/C System (see “HVAC Charging” in this manual).

A/C OUTSIDE COIL

REMOVAL

(1) Disable the traction battery pack by turning the high voltage service disconnect switch to Off.
(2) Disconnect and isolate the auxiliary battery negative cable.
(3) Remove cooling module. Refer to “Cooling Module Removal”, this group.
(4) Remove A/C auxiliary outside coil to outside coil line. Be careful not to damage O ring seals.
(5) Remove A/C auxiliary outside coil mounting screws (3).
(6) Remove A/C auxiliary outside coil.
(7) Remove nut attaching A/C outside coil line to block on A/C outside coil. Be careful not to damage O ring seals.
(8) Remove A/C outside coil mounting screws (4).
(9) Remove A/C outside coil (Fig. 3).

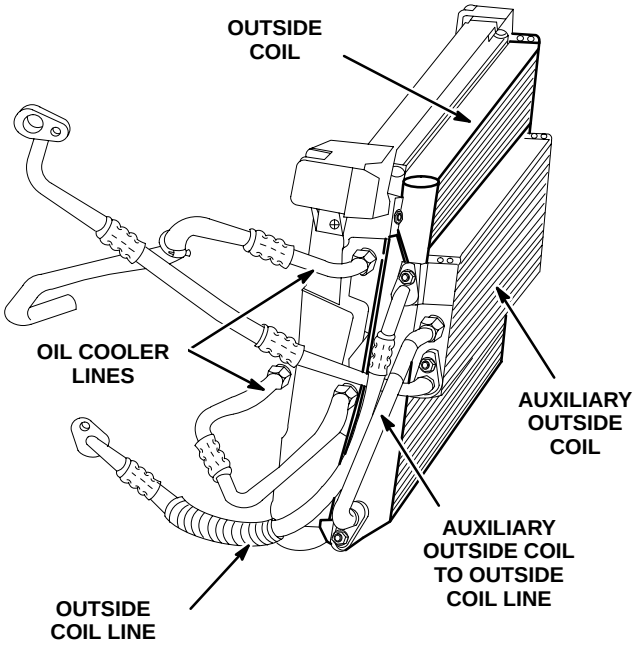

Fig. 3 Outside Coil

INSTALLATION

(1) Position air seals.
(2) Install A/C outside coil.
(3) Install A/C outside coil mounting screws (4). Torque to 5.1 ± 1.1 N•m (45 ± 10 in. lbs.).
(4) Install A/C auxiliary outside coil.
(5) Install A/C auxiliary outside coil mounting screws (3). Torque to 5.1 ± 1.1 N•m (45 ± 10 in. lbs.).
(6) Install A/C lines and tighten. Torque to 20.3 ± 3.4 N•m (180 ± 30 in. lbs.).
(7) Install cooling module.
(8) Fill turbine oil. Refer to “Oil Fill Procedure” in powertrain group 9.
(9) Connect auxiliary battery negative cable.
(10) Enable the traction battery pack by turning the high voltage service disconnect switch to On.
(11) Charge A/C System (see “HVAC Charging” in this manual).

A/C SERVICE PORT SCHRADER VALVES

DESCRIPTION

The A/C suction service port is located in the suction line (low side) near the compressor (fig. 4).

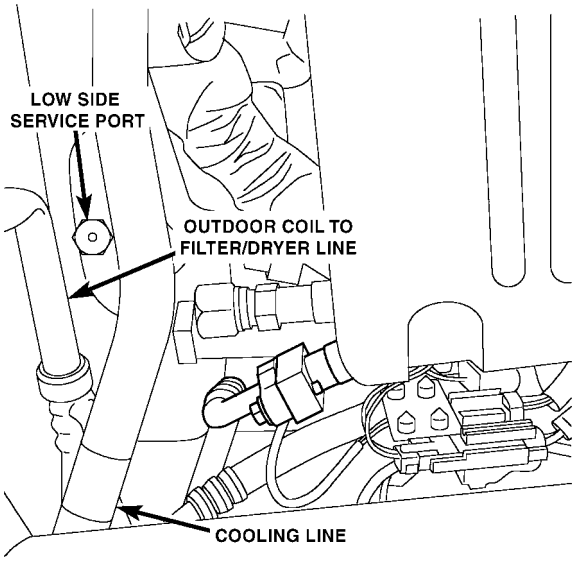

Fig. 4 A/C Suction Service Port (low side)

97049-115

The discharge service port is located on the discharge line (high side) near the compressor (fig. 5).

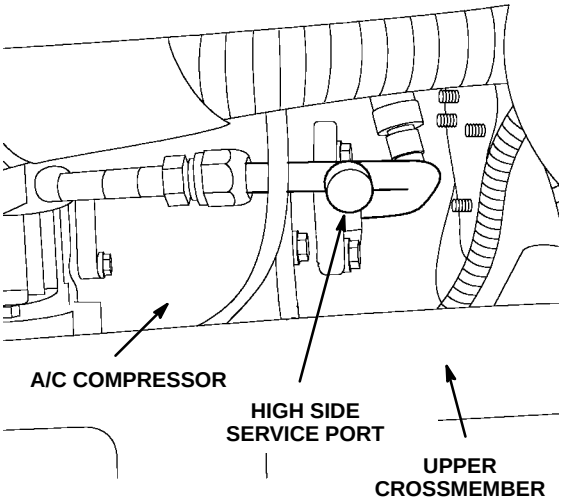

97049-148

Fig. 5 A/C Discharge Service Port (high side)

The schrader valve in the discharge (high side) service port and transducer fitting are serviceable. The suction (low side) service port schrader valve is not serviceable. You must replace the suction line.

REMOVAL

(1) Disable the traction battery pack by turning the service disconnect switch to Off.
(2) Disconnect and isolate the auxiliary battery negative cable.
(3) Evacuate the refrigerant system as described in this manual.
(4) Disconnect evacuation lines.
(5) Remove schrader valve.

INSTALLATION

(1) Install schrader valve.
(2) Connect auxiliary battery cable.
(3) Enable the traction battery pack by turning the service disconnect switch to On.
(4) Connect reclaim/recharge lines and recharge system.

BI–DIRECTIONAL LINE

REMOVAL

(1) Disable the traction battery pack by turning the service disconnect switch to Off.
(2) Disconnect and isolate the auxiliary battery negative cable.
(3) Evacuate the refrigerant system as described in this manual.
(4) Remove compressor controller. Refer to compressor controller removal procedure in this manual.
(5) Disconnect ground strap from Bi–Directional line at HVAC.
(6) Remove Bi–Directional line/HVAC block retaining nut.
(7) Remove Bi–Directional line from inside coil.
(8) Remove Bi–Directional line retaining bolt at filter dryer.
Remove Bi–Directional line (Fig.6).

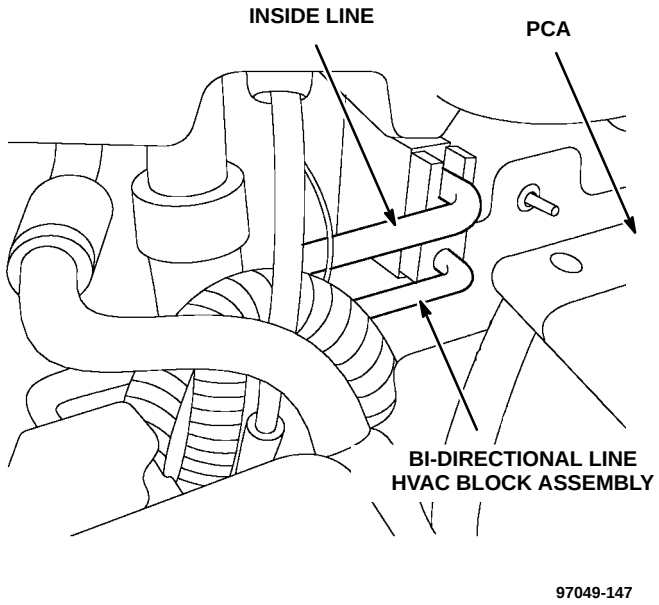

Fig. 6 Bi–Directional Line

INSTALLATION

(1) Install Bi–Directional line to inside coil. **Replace all O–rings and lightly coat with ESTER compressor oil.**
(2) Torque Bi–Directional line/HVAC block retaining nut to 22 N•m (200 in lbs).
(3) Connect ground strap.
(4) Install Bi–Directional line to filter dryer. Torque retaining bolt to 11 N•m (100 in lbs).
(5) Install compressor controller. Refer to compressor controller installation procedure in this manual.
(6) Connect the auxiliary battery negative cable.
(7) Enable the traction battery pack by turning the service disconnect switch to On.
(8) Recharge the refrigerant system as described in this manual.

BLEND/AIR CHAMBER THERMISTOR

REMOVAL

(1) Disable the traction battery pack by turning the high voltage service disconnect switch to OFF.
(2) Disconnect and isolate the auxiliary battery negative cable.
(3) Remove HVAC unit housing. Refer to HVAC Unit Housing Removal in the standard NS Service Manual for proper procedures.

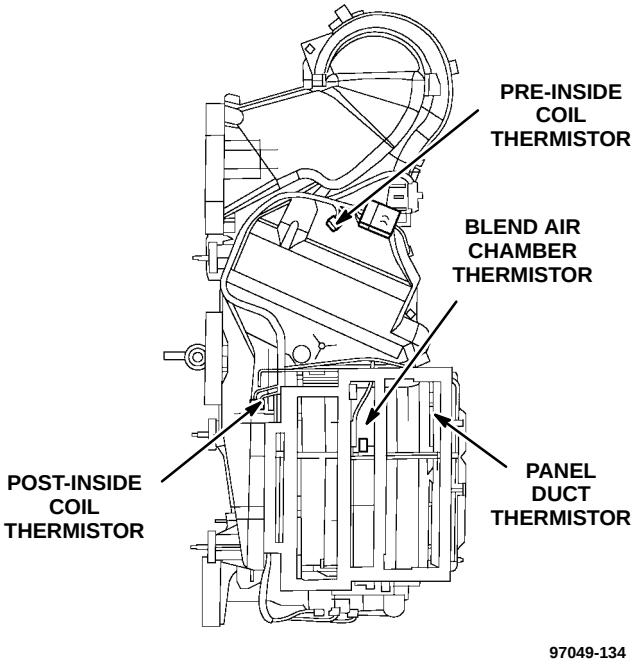

Fig. 7 Blend Air Thermistor

NOTE: To remove the thermistor, use a pair of large jaw pliers and rock thermistor back and forth while pulling straight down.

(4) Remove blend/air chamber thermistor (Fig. 7).

NOTE: When replacing thermistors, you must cut the thermistor wires. When installing new thermistors, solder new thermistor wires to the wires from the harness. Orientation of the wires is not important.

BLEND/AIR CHAMBER THERMISTOR (Continued)

INSTALLATION

(1) Install blend/air chamber thermistor.
(2) Install HVAC unit housing. Refer to HVAC Unit Housing Installation in the standard NS Service Manual for proper procedures.
(3) Connect the auxiliary battery negative cable.
(4) Enable the traction battery pack by turning the service disconnect switch to On.

COMPRESSOR

DESCRIPTION

The A/C compressor is a scroll-type compressor and is unique to the EPIC. It is driven by a variable speed high voltage brushless motor. The motor is part of the compressor and is cooled by the system refrigerant passing through the windings during operation.

OPERATION

The compressor runs in the same direction in cooling or heat pump mode. The refrigerant changes direction as it passes through the four-way valve. The compressor, motor and four-way valve are serviced as an assembly.

REMOVAL

(1) Disable the traction battery pack by turning the service disconnect switch to Off.
(2) Disconnect and isolate the auxiliary battery negative cable.
(3) Evacuate the refrigerant system as described in this manual.
(4) Remove thermistor and four-way valve low voltage connectors (two).
(5) Remove high voltage connector.
(6) Disconnect suction line.
(7) Disconnect discharge line.
(8) Raise vehicle.
(9) Remove suction line transducer connector.
(10) Remove suction line thermistor connector.
(11) Remove high side transducer connector.
(12) Remove lower compressor mount bolt.
(13) Remove upper compressor mount bolt.
(14) Remove compressor (Fig. 8).

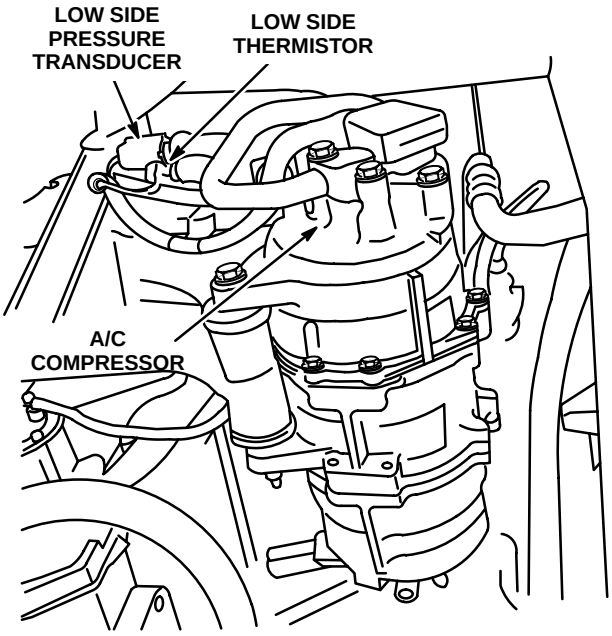

Fig. 8 Compressor

INSTALLATION

NOTE: If replacing compressor, drain old compressor and measure oil. Drain new compressor and add the amount of new oil (ESTER COMPRESSOR OIL) that came out of old compressor.

(1) Install compressor.
(2) Install upper compressor mount bolt. Torque to 28 N•m (250 in lbs).
(3) Install lower compressor mount bolt. Torque to 28 N•m (250 in lbs).
(4) Connect high side transducer connector.
(5) Connect suction line thermistor connector.
(6) Connect suction line transducer connector.
(7) Lower vehicle.
(8) Connect discharge line.
(9) Connect suction line.
(10) Install high voltage connector.
(11) Install thermistor and four-way valve low voltage connectors (two).
(12) Connect the auxiliary battery negative cable.
(13) Enable the traction battery pack by turning the service disconnect switch to On.
(14) Recharge the refrigerant system as described in this manual.

COMPRESSOR CONTROLLER

DESCRIPTION

The compressor controller features outputs which send electrical current draw and compressor RPM signals to the control head. The control head PWM duty signal to the compressor controller and the controller speed and current outputs are accessible with the scan tool.

OPERATION

The control head sends a 100Hz PWM signal to the compressor controller which, in turn, sends a PWM signal to the compressor to control the compressor speed. By using suction pressure feedback, the control head adjusts compressor speed via the compressor controller, and the system effectively matches compressor capacity to inside coil load and operator demand. The control head also monitors the discharge pressure, if the pressure is greater than the set point (325 psi.), the compressor speed is decreased.

REMOVAL

(1) Disable the traction battery pack by turning the service disconnect switch to Off.
(2) Disconnect and isolate the auxiliary battery negative cable.

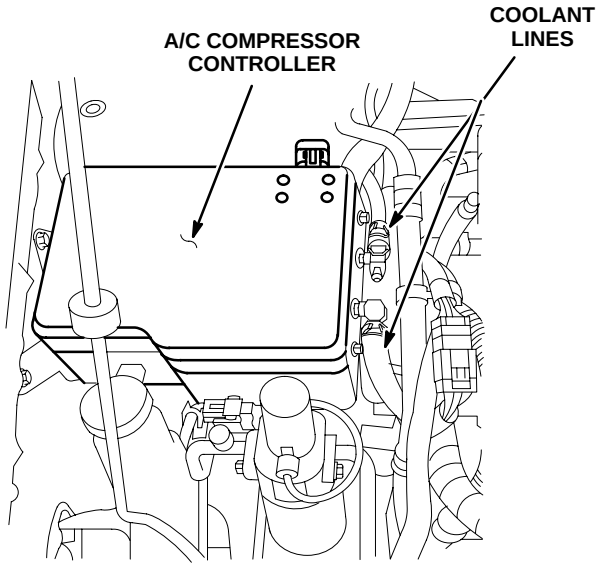

Fig. 9 Compressor Controller

(3) Remove low voltage connector.
(4) Remove high voltage connector.
(5) Disconnect and plug coolant lines.
(6) Remove compressor controller attaching bolts (three).
(7) Remove compressor controller (Fig. 9).

INSTALLATION

(1) Install compressor controller.
(1) Install attaching screws and washers (3). Torque to 8 Nm (70 in lbs)
(2) Install coolant lines.
(3) Install high voltage connector.
(4) Install low voltage connector.
(5) Connect the auxiliary battery negative cable.
(6) Enable the traction battery pack by turning the service disconnect switch to On.
(7) Check/fill cooling system.

COMPRESSOR TO HEAT EXCHANGER LINE

REMOVAL

(1) Disable the traction battery pack by turning the high voltage service disconnect switch to Off.

(2) Disconnect and isolate the auxiliary battery negative cable.

(3) Raise vehicle on a hoist. Refer to “Lifting Procedure” in this manual.

(4) Discharge A/C system (see “HVAC Service” in this manual).

(5) Remove the receiver drier to heat exchanger TXV block retaining nut.

(6) Remove the receiver drier to TXV block from the TXV (fig. 10).

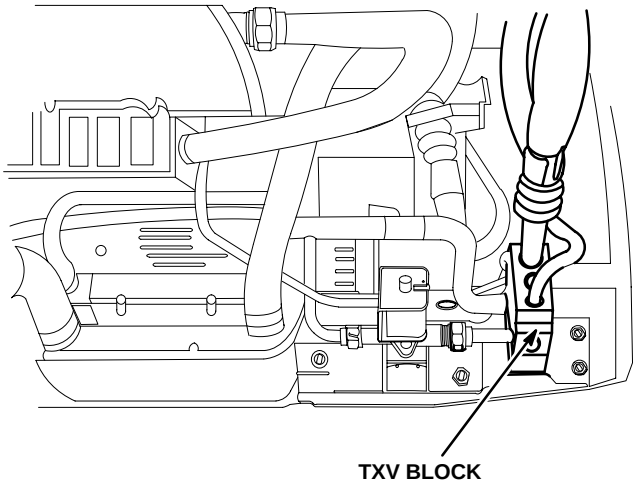

Fig. 10 TXV Block

(7) Remove the compressor to heat exchanger line from TXV.

(8) Remove the compressor to heat exchanger line from the compressor.

INSTALLATION

(1) Install line on compressor. Torque nut to 20 N•m (180 in lbs). **Replace all O–rings and lightly coat with ESTER compressor oil.**

(2) Install line at TXV. Torque mounting nut to 14 N•m (125 in. lbs.)

(3) Lower vehicle.

(4) Connect auxiliary battery negative cable.

(5) Enable the traction battery pack by turning the high voltage service disconnect switch to On.

(6) Charge A/C System (see HVAC charging in this manual).

ELECTRONIC EXPANSION VALVE (EXV)

The EXV is part of the filter dryer assembly and is replaced as an assembly. Refer to filter dryer R&I in this group.

DESCRIPTION

The Electronic Expansion Valve is a bi–directional component which meters refrigerant flow and provides expansion of high pressure liquid refrigerant. The bi–directional feature of the valve is achieved with the use of a shuttle device and internal check valves.

OPERATION

The metering device consists of a post with a small hole drilled in it. Around this hole is a movable sleeve. To meter the flow, the sleeve is moved over the hole in the post to either increase or decrease the cross sectional area of the expansion orifice. The sleeve is moved over the post by a plunger which is placed inside the coil of a proportional solenoid valve.

As current flows through the coil, a magnetic field is created causing the plunger to move. The magnetic force is opposed by a spring which compresses or relaxes until equilibrium is reached. The control head monitors and adjusts the current through the solenoid via a 1960 Hz PWM signal which uses suction superheat as a feedback. The duty signal from the control head to the EXV may be monitored via the scan tool.

FILTER DRYER

REMOVAL

(1) Disable the traction battery pack by turning the service disconnect switch to Off.
(2) Disconnect and isolate the auxiliary battery negative cable.
(3) Evacuate the refrigerant system as described in this manual.
(4) Disconnect the Bi-Directional line at the filter dryer.
(5) Disconnect the outside coil to filter dryer line at filter dryer.
(6) Disconnect EXV connector (clipped to compressor controller).
(7) Remove filter dryer retaining bolt.
(8) Remove filter dryer (Fig. 11).

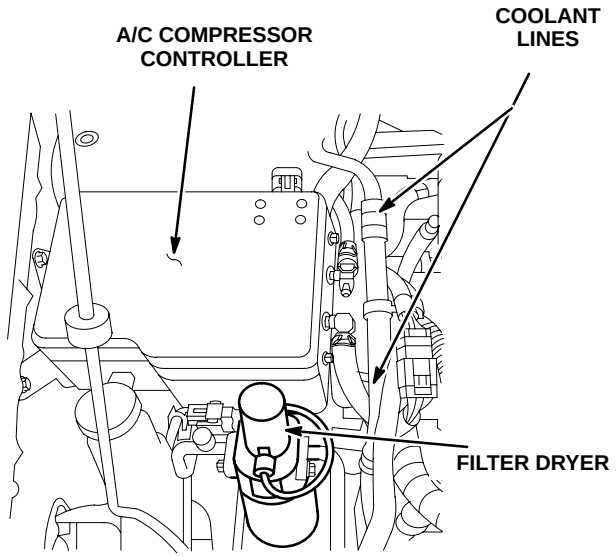

Fig. 11 EXV/Filter Dryer assembly

INSTALLATION

(1) Install filter dryer. Torque retaining bolt to 8 N•m (70 in lbs).
(2) Install EXV connector.
(3) Install outside coil to filter dryer line. Torque to 11 N•m (100 in lbs).
(4) Install Bi-Directional line to filter dryer. Torque to 11 N•m (100 in lbs).
(5) Connect the auxiliary battery negative cable.
(6) Enable the traction battery pack by turning the service disconnect switch to On.
(7) Recharge the refrigerant system as described in this manual.

NOTE: If the filter dryer is replaced, add 30 ml (1oz) of ESTER COMPRESSOR OIL to the refrigerant system.

FLOOR DUCT THERMISTOR

REMOVAL

(1) Disable the traction battery pack by turning the high voltage service disconnect switch to Off.
(2) Disconnect and isolate the auxiliary battery negative cable.
(3) Remove forward lower console from instrument panel. Refer to Group 8E, Instrument Panel and Systems in the standard NS Service Manual for proper procedures.

NOTE: To remove the thermistor, use a pair of large jaw pliers and rock thermistor back and forth while pulling straight down.

(4) Remove floor duct thermistor (Fig. 12).

NOTE: When replacing thermistors, you must cut the thermistor wires. When installing new thermistors, solder new thermistor wires to the wires from the harness. Orientation of the wires is not important.

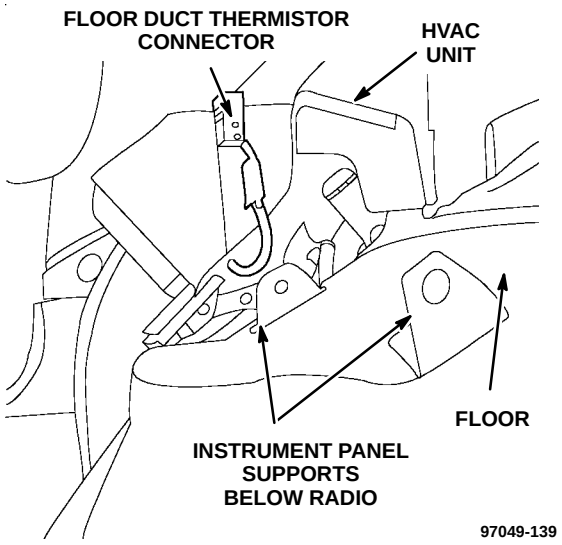

Fig. 12 Floor Duct Thermistor

INSTALLATION

(1) Install floor duct thermistor.
(2) Install forward lower console from instrument panel. Refer to Group 8E, Instrument Panel and Systems in the standard NS Service Manual for proper procedures.
(3) Connect the auxiliary battery negative cable.
(4) Enable the traction battery pack by turning the service disconnect switch to On.

HEAT EXCHANGER MODULE

DESCRIPTION

The heat exchanger module is part of the HVAC and battery pack cooling systems and consists of a heat exchanger, TXV, and shut–off valve. The heat exchanger module is attached to the front lower crossmember below the passenger side frame rail.

OPERATION

The TXV is used with the shut–off valve to control refrigerant flow through the heat exchanger. Refrigerant is circulated through the heat exchanger around traction battery coolant lowering the battery temperature as the coolant passes through the heat exchanger in route to the battery pack, IGBTs, APC and Compressor Controller.

REMOVAL

(1) Disable the traction battery pack by turning the high voltage service disconnect switch to Off.
(2) Disconnect and isolate the auxiliary battery negative cable.
(3) Evacuate the refrigerant system as described in this manual.
(4) Raise vehicle on a hoist. Refer to “Lifting Procedure” in this manual.
(5) Disconnect shut–off valve electrical connector.
(6) Pinch coolant hoses (2) near heat exchanger (fig. 14).
(7) Remove hose clamps.
(8) Remove hoses and plug.
(9) Disconnect refrigerant lines from TXV (2).
(10) Remove mounting screws (4).
(11) Remove heat exchanger module (fig. 13).

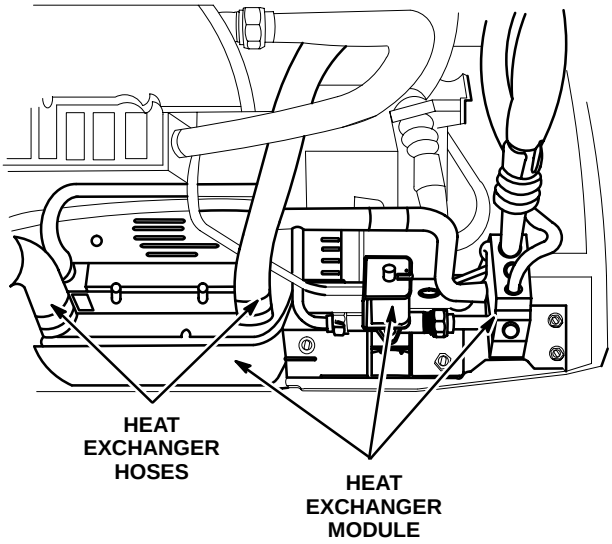

Fig. 13 Heat Exchanger Module

NOTE: If the Heat Exchanger Module is replaced, add 60 ml (2oz) of ESTER compressor oil to the refrigerant system.

INSTALLATION

(1) Install heat exchanger module.
(2) Install mounting screws (4). Torque to 10 N•m (95 in. lbs.).
(3) Connect refrigerant lines. Torque to 14 N•m (125 in. lbs.). **Replace all O–rings and lightly coat with ESTER compressor oil.**
(4) Install coolant hoses (2).
(5) Connect shut–off valve electrical connector.
(6) Remove hose pinching tool.
(7) Lower vehicle.
(8) Connect auxiliary battery negative cable.
(9) Enable the traction battery pack by turning the high voltage service disconnect switch to On.
(10) Charge A/C System (see HVAC charging in this manual).
(11) Fill coolant and check level. Refer to “Battery Pack Cooling System Fill Procedure” in this group.

HEAT EXCHANGER TO RECEIVER DRIER LINE

REMOVAL

(1) Disable the traction battery pack by turning the high voltage service disconnect switch to Off.
(2) Disconnect and isolate the auxiliary battery negative cable.
(3) Evacuate the refrigerant system as described in this manual.
(4) Raise vehicle on a hoist. Refer to “Lifting Procedure” in this manual.
(5) Remove the receiver drier to heat exchanger TXV block retaining nut.
(6) Remove the receiver drier to TXV block from the TXV (fig. 14).
(7) Remove the compressor to heat exchanger line from TXV.
(8) Remove receiver drier line form receiver drier.

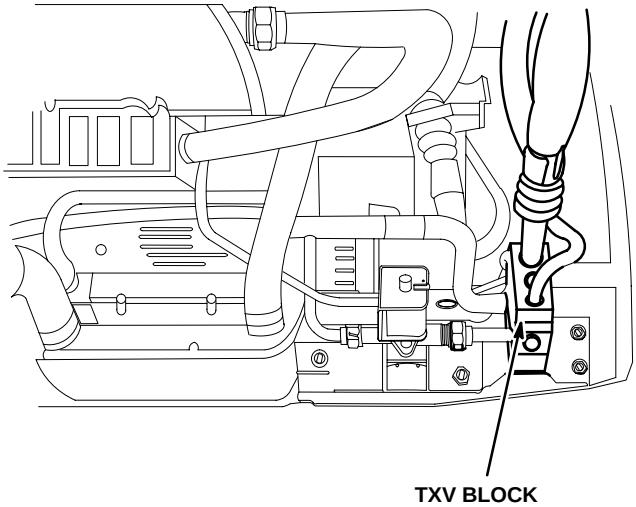

Fig. 14 TXV Block

INSTALLATION

(1) Install line on receiver drier. Torque nut to 20 N•m (180 in lbs). **Replace all O–rings and lightly coat with ESTER compressor oil.**
(2) Install line at TXV. Torque mounting nut to 14 N•m (125 in. lbs.)
(3) Lower vehicle.
(4) Connect auxiliary battery negative cable.
(5) Enable the traction battery pack by turning the high voltage service disconnect switch to On.
(6) Charge A/C System (see HVAC charging in this manual).

HVAC CONTROL HEAD

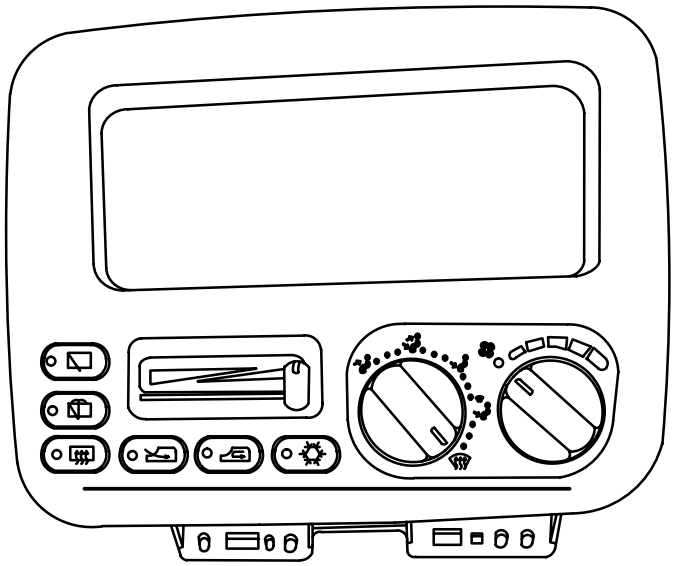

Fig. 15 HVAC Control Head

DESCRIPTION

The HVAC control head looks similar to the control head found in the gasoline version and is also located in the same area (Fig. 15).

The temperature lever provides several functions and delivers different results depending upon the ambient temperature and whether the A/C button is selected. As the temperature lever is moved from cold to hot, the operator should see an increase in the temperature of the outlet air. The mode knob is also similar to the gasoline vehicle. Turning the mode activates an electric actuator which moves the mode doors inside the HVAC unit to direct the outlet air to the desired position. The blower speed knob provides an infinitely variable speed selection for the blower motor. The control head senses the blower knob potentiometer signal and sends a 50Hz Pulse Width Modulated (PWM) signal to the indoor blower Solid State Relay (SSR). The SSR then outputs a 20 Khz PWM signal to the blower motor to control the blower speed. for inlet air is a mixture of fresh and recirculated air. All buttons and controls on the control head work exactly as the gasoline version.

HVAC CONTROL HEAD (Continued)

The EPIC also features a 100% FRESH air button which allows the operator to select 100% fresh intake air. If neither the full FRESH nor the RECIRC button are selected, the default mode

The control head also provides many features invisible to the operator. The control head monitors the refrigerant suction and discharge pressures and controls the compressor speed based upon the system pressures and the temperature lever position. In air conditioning modes, each temperature lever position corresponds to a suction pressure setpoint. If the suction pressure is above the setpoint then the control head sends a Pulse Width Modulation (PWM) signal to the compressor controller to increase the compressor speed or to decrease the compressor speed if the suction pressure is below setpoint. The control head will also reduce the duty signal to the compressor controller if the discharge pressure limit is reached (325 psig in A/C and 275 psig in heat pump).

The control head also monitors the suction gas temperature and uses this information along with the suction pressure to calculate the superheat of the refrigerant at the compressor suction port. The control head uses the suction superheat as feed-back for the Electronic Expansion Valve (EXV). The EXV is a bi–directional refrigerant metering and expanding device. The suction superheat setpoint is –14°C (6°F). If the suction superheat is above the setpoint, the control head sends a 1960 Hz PWM signal to the EXV which causes the valve to open allowing more refrigerant to flow. If the suction superheat is below the setpoint, the control head reduces the duty signal to the EXV, thus slightly closing the valve, reducing refrigerant flow and raising the superheat. The control head also has the capability of sensing failures of actuators, blowers, thermistors, transducers, compressor, PTC heater controller and the compressor controller. When the control head senses a fault, a message is sent to the Body Control Module (BCM) via the Chrysler Collision Detection (CCD) bus. These messages can be accessed with a scan tool and the proper software cartridge.

OPERATION

REMOVAL

(1) Disable the traction battery pack by turning the service disconnect switch to Off.
(2) Disconnect and isolate the auxiliary battery negative cable.
(3) Refer to standard NS Service Manual for R&I procedures.

INSTALLATION

(1) Refer to standard NS Service Manual for R&I procedures.
(2) Connect the auxiliary battery negative cable.
(3) Enable the traction battery pack by turning the service disconnect switch to On.

HVAC UNIT ASSEMBLY

REMOVAL

(1) Disable the traction battery pack by turning the service disconnect switch to Off.
(2) Disconnect and isolate the auxiliary battery negative cable.
(3) Evacuate the refrigerant system as described in this manual.
(4) Remove high voltage connection to PTC heater core underneath instrument panel.
(5) Proceed with removal as described in the standard NS Service Manual (Fig. 16).

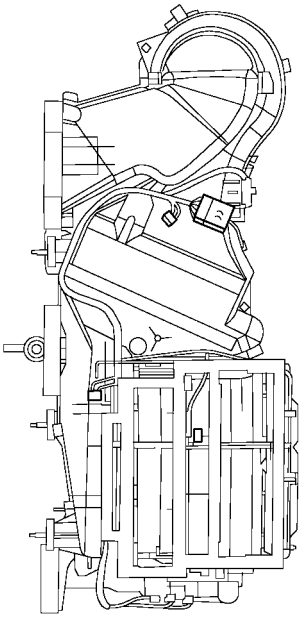

97049-134

Fig. 16 HVAC Unit Assembly

HVAC UNIT ASSEMBLY (Continued)

INSTALLATION

(1) Install HVAC unit assembly as described in standard NS Service Manual.
(2) Connect high voltage PTC heater core connector.
(3) Connect auxiliary battery negative cable.
(4) Enable the traction battery pack by turning the service disconnect switch to On.

INSIDE COIL

DESCRIPTION

The inside coil has a dual role, in A/C mode it is a heat gathering evaporator, and in Heat Pump mode it becomes a heat rejecting condenser. The inside coil is located in the same position as the evaporator core in the gasoline version.

OPERATION

REMOVAL

(1) Disable the traction battery pack by turning the service disconnect switch to Off.
(2) Disconnect and isolate the auxiliary battery negative cable.
(3) Evacuate the refrigerant system as described in this manual.
(4) Remove HVAC housing. Refer to HVAC housing removal.
(5) Place HVAC unit assembly on workbench.
(6) Remove distribution housing mounting screws.
(7) Remove blower motor cover.
(8) Remove blower motor wiring grommet and feed wiring through blower housing.
(9) Remove blower motor screws. Remove blower motor from housing.
(10) Remove recirculation door cover.
(11) Remove RECIRC door.
(12) Remove screws around the perimeter of the upper HVAC housing.
(13) Remove HVAC upper housing.

NOTE: Do not damage the insulation barrier surrounding the inside coil.

(14) Carefully pull up on inside coil and remove from housing (Fig. 17).

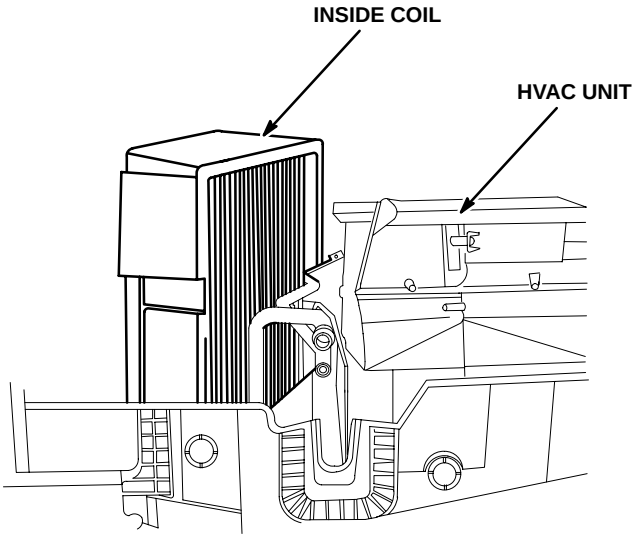

Fig. 17 Inside Coil

INSTALLATION

(1) Install inside coil.
(2) Install HVAC upper housing.
(3) Install upper housing screws.
(4) Install RECIRC door.
(5) Install recirculation door cover.
(6) Install blower motor.
(7) Feed blower motor wiring through blower housing and install grommet.
(8) Install blower motor cover.
(9) Install distribution housing.
(10) Install HVAC unit assembly in vehicle (see HVAC unit installation).
(11) Connect auxiliary battery.
(12) Enable the traction battery pack by turning the service disconnect switch to On.
(13) Charge air conditioning (see A/C charging instructions).
(14) Perform the HVAC control Calibration Diagnostic and Cooldown test.

NOTE: If the inside coil replaced, add 60ml (2oz) of ESTER COMPRESSOR OIL to the refrigerant system.

INSIDE COIL FIN PROBE (THERMISTOR)

The inside coil fin probe (thermistor) is located in the inside coil fins and is monitored by the control head to protect the A/C system from freeze up. If the temperatures drop to a freeze–up point, the control head slows down or cycles the compressor. The fin probe is inserted between the coils. The probe is a sealed unit and cannot be adjusted or repaired. It must be replaced if found defective. Refer to section 24 of the 1999 NS Service Manual for service procedure.

INSIDE COIL LINE

REMOVAL

(1) Disable the traction battery pack by turning the service disconnect switch to Off.
(2) Disconnect and isolate the auxiliary battery negative cable.
(3) Evacuate the refrigerant system as described in this manual.
(4) Remove ground strap from Bi-Directional line at HVAC block.
(5) Remove Bi–Directional line/HVAC block retaining nut.
(6) Remove Bi–Directional line from inside coil.
(7) Remove inside coil line from inside coil.
(8) Remove mounting bracket from shock tower.
(9) Remove inside coil line retaining nut from compressor.
(10) Remove inside coil line (Fig. 18).

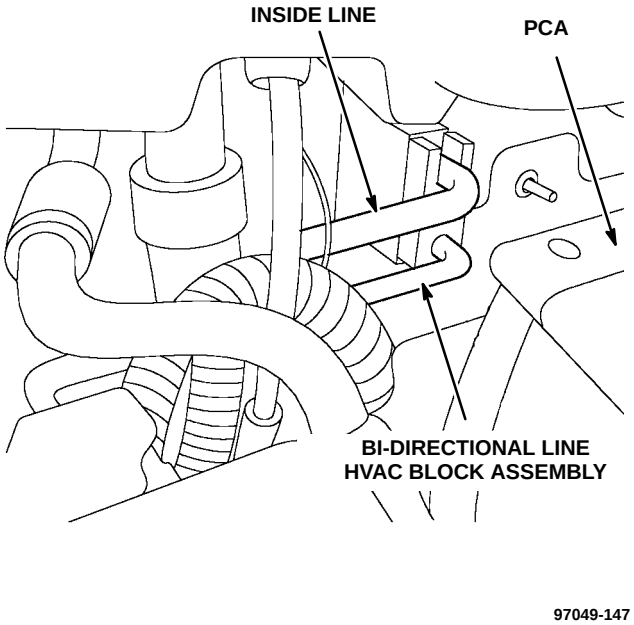

Fig. 18 Inside Coil Line

INSTALLATION

(1) Install inside coil line to inside coil. **Replace all O–rings and lightly coat with ESTER compressor oil.**
(2) Install Bi–Directional line to inside coil. Torque retaining nut to 22N•m (200 in. lbs).

(3) Install ground strap.
(4) Install mounting bracket to shock tower. Torque nut to 7 N•m (65 in. lbs).
(5) Install inside coil line to compressor. Torque nut to 22 N•m (200 in. lbs).
(6) Connect the auxiliary battery negative cable.
(7) Enable the traction battery pack by turning the service disconnect switch to On.
(8) Recharge the refrigerant system as described in this manual.

OUTSIDE COIL LINE

REMOVAL

(1) Disable the traction battery pack by turning the service disconnect switch to Off.
(2) Disconnect and isolate the auxiliary battery negative cable.
(3) Evacuate the refrigerant system as described in this manual.
(4) Disconnect outside coil line from A/C compressor.
(5) Remove cooling module. Refer to cooling module removal in this manual.
(6) Remove outside coil line from cooling module (Fig. 19).

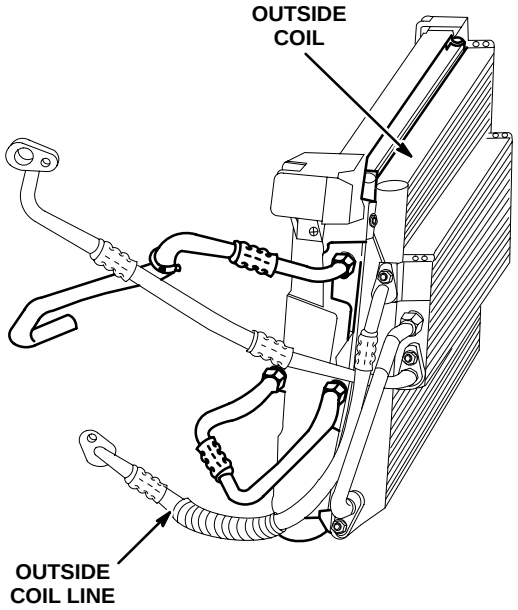

Fig. 19 Outside Coil Line

OUTSIDE COIL LINE (Continued)

INSTALLATION

(1) Install outside coil line. Torque to 20 N•m (180 in lbs).
(2) Install cooling module. Refer to cooling module installation procedure in this manual.
(3) Install outside coil line to compressor. Torque to 22 N•m (200 in lbs).
(4) Connect auxiliary battery.
(5) Enable the traction battery pack by turning the service disconnect switch to On.
(6) Recharge refrigerant system as described in this manual.

OUTSIDE COIL TO FILTER DRYER LINE

REMOVAL

(1) Disable the traction battery pack by turning the service disconnect switch to Off.
(2) Disconnect and isolate the auxiliary battery negative cable.

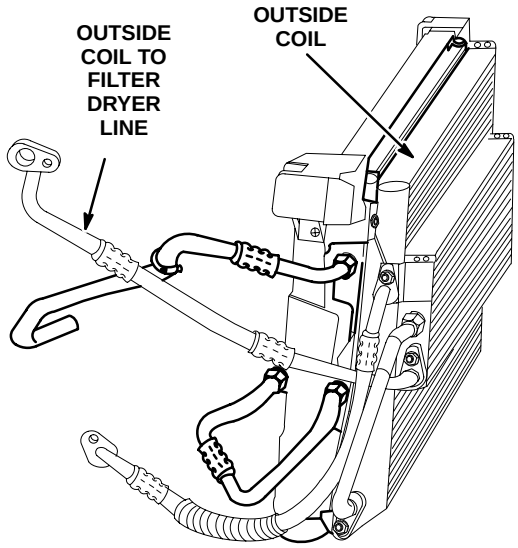

Fig. 20 Outside Coil To Filter Dryer Line

(3) Evacuate the refrigerant system as described in this manual.
(4) Remove bolt (1) connecting line to filter dryer.
(5) Remove line by carefully twisting line at filter dryer connection while applying light pressure.
(6) Remove cooling module assembly. Refer to cooling module removal procedure in this manual.
(7) Remove line retaining nut from outside coil.
(8) Remove line from outside coil (Fig. 20).

INSTALLATION

(1) Install line to outside coil. **Replace all O–rings and lightly coat with ESTER compressor oil.**
(2) Install retaining nut and torque to 20 N•m (180 in lbs).
(3) Install cooling module. Refer to cooling module installation procedure in this manual.
(4) Install line to filter dryer. Torque retaining bolt to 11 N•m (100in lbs).
(5) Connect auxiliary battery.
(6) Enable the traction battery pack by turning the service disconnect switch to On.
(7) Recharge refrigerant system as described in this manual.

PANEL DUCT THERMISTOR

REMOVAL

(1) Disable the traction battery pack by turning the high voltage service disconnect switch to Off.
(2) Disconnect and isolate the auxiliary battery negative cable.
(3) Remove HVAC unit housing. Refer to HVAC Unit Housing Removal in the standard NS Service Manual for proper procedures.

NOTE: To remove the thermistor, use a pair of large jaw pliers and rock thermistor back and forth while pulling straight down.

(4) Remove panel duct thermistor (Fig. 21).

NOTE: When replacing thermistors, you must cut the thermistor wires. When installing new thermistors, solder new thermistor wires to the wires from the harness. Orientation of the wires is not important.

PANEL DUCT THERMISTOR (CONTINUED)

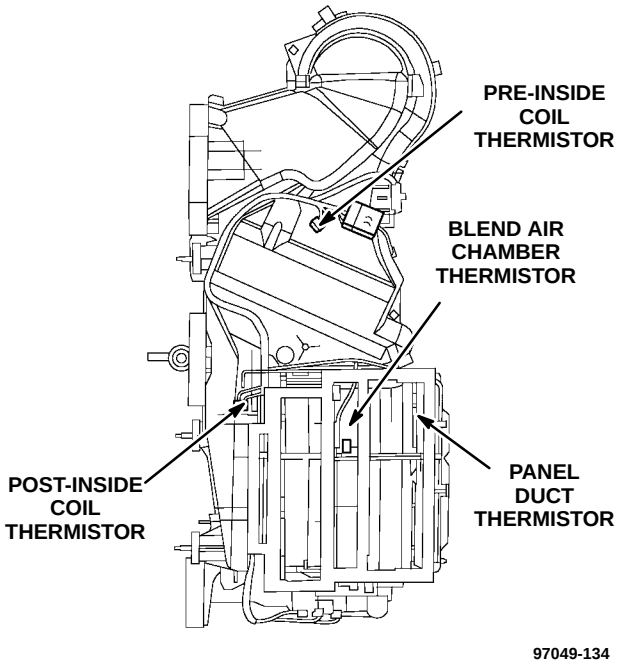

Fig. 21 Panel Duct Thermistor

INSTALLATION

(1) Install panel duct thermistor.
(2) Install HVAC unit housing. Refer to HVAC Unit Housing Installation in the standard NS Service Manual for proper procedures.
(3) Connect the auxiliary battery negative cable.
(4) Enable the traction battery pack by turning the service disconnect switch to On.

POSITIVE TEMPERATURE COEFFICIENT (PTC) HEATER CONTROLLER

DESCRIPTION

The PTC heater controller is responsible for switching the high voltage to the PTC heater. All switching is done on the ground side of the high voltage circuit. A low voltage signal from the control head closes three Insulated Gate Bipolar Transistors (IGBTs) in the PTC heater controller and completes the high voltage circuit. The controller sends a signal to the control head if an open heater circuit, shorted IGBT or open pilot line are detected. These signals are accessible through the scan tool.

REMOVAL

(1) Disable the traction battery pack by turning the service disconnect switch to Off.
(2) Disconnect the auxiliary battery negative cable.
(3) Raise vehicle.
(4) Remove the battery interface center (BIC). Refer to “Battery Interface Center” removal procedures in the Powertrain section of this manual.
(5) Remove the battery tub fan. Refer to “Battery Tub Fan” removal procedures in the Powertrain section of this manual.
(6) Remove low voltage connector on the PTC heater controller (Fig. 22).
(7) Remove high voltage connector on the PTC heater controller.
(8) Remove PTC heater mounting bolts (3).
(9) Remove PTC heater controller.

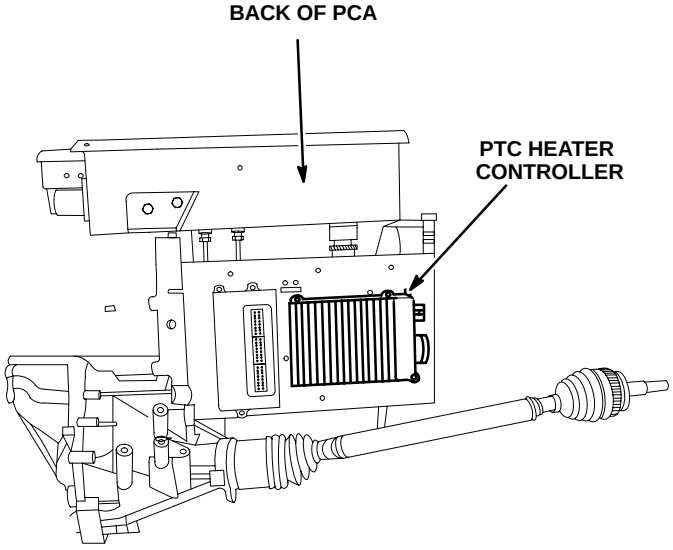

Fig. 22 PTC Heater Controller

INSTALLATION

(1) Install PTC heater controller. Torque bolts (3) to 6 N•m (55 in. lbs).
(2) Install high voltage connector.
(3) Install low voltage connector.
(4) Install the battery tub fan. Refer to “Battery Tub Fan” installation procedures in the Powertrain section of this manual.
(5) Install the battery interface center (BIC). Refer to “Battery Interface Center” installation procedures in the Powertrain section of this manual.
(6) Lower vehicle.
(7) Install auxiliary battery negative cable.
(8) Enable the traction battery pack by turning the service disconnect switch to On.

PRE-INSIDE COIL THERMISTOR

REMOVAL

(1) Disable the traction battery pack by turning the high voltage service disconnect switch to Off.
(2) Disconnect and isolate the auxiliary battery negative cable.
(3) Remove HVAC unit housing. Refer to HVAC Unit Housing Removal in the standard NS Service Manual for proper procedures.

NOTE: To remove the thermistor, use a pair of large jaw pliers and rock thermistor back and forth while pulling straight down.

(4) Remove pre–inside coil thermistor (Fig. 23).

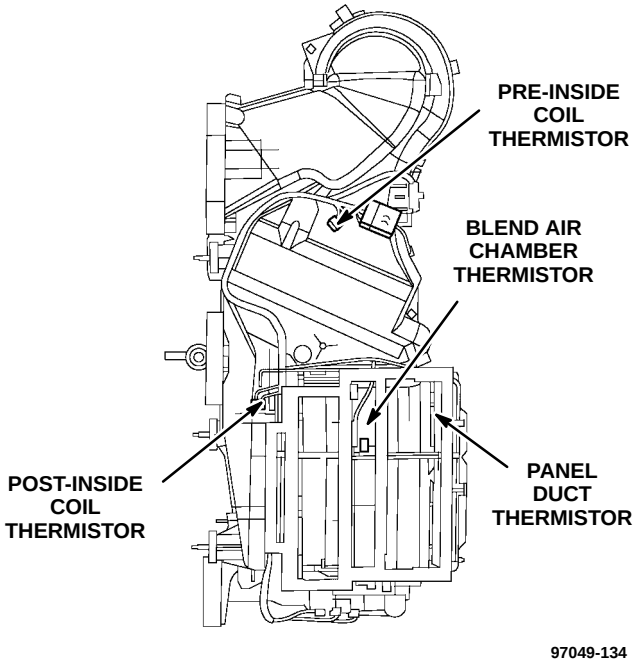

Fig. 23 Pre–Inside Coil Thermistor

NOTE: When replacing thermistors, you must cut the thermistor wires. When installing new thermistors, solder new thermistor wires to the wires from the harness. Orientation of the wires is not important.

INSTALLATION

(1) Install pre-inside coil thermistor.
(2) Install HVAC unit housing. Refer to HVAC Unit Housing Installation in the standard NS Service Manual for proper procedures.
(3) Connect the auxiliary battery negative cable.
(4) Enable the traction battery pack by turning the service disconnect switch to On.

PTC HEATER CORE

DESCRIPTION

The EPIC PTC heater core looks similar to the gasoline version, but is electrically powered (324 volts DC). The PTC heater core is also mounted in the same location as the gasoline version. The fins are electrically live when plugged in. The PTC heater will not turn on above 29°C (85°F).

REMOVAL

NOTE: Review Safety Precautions and Warnings before proceeding with this operation.

(1) Disable the traction battery pack by turning the high voltage service disconnect switch to Off.
(2) Disconnect and isolate the auxiliary battery negative cable.
(3) Remove left side lower column cover.
(4) Remove steering column assembly. Refer to Group 19, Steering, for service procedure.
(5) Remove ABS module and wiring.
(6) Remove I/P to body harness interconnect and bracket.
(7) Remove lower silencer boot at base of steering shaft.
(8) Remove pilot line connector.
(9) Remove PTC heater core cover with special tool # 33312.
(10) Pull up on accelerator pedal and slide PTC heater core past.
(11) Depress brake pedal and remove PTC heater core from HVAC (Fig. 24).

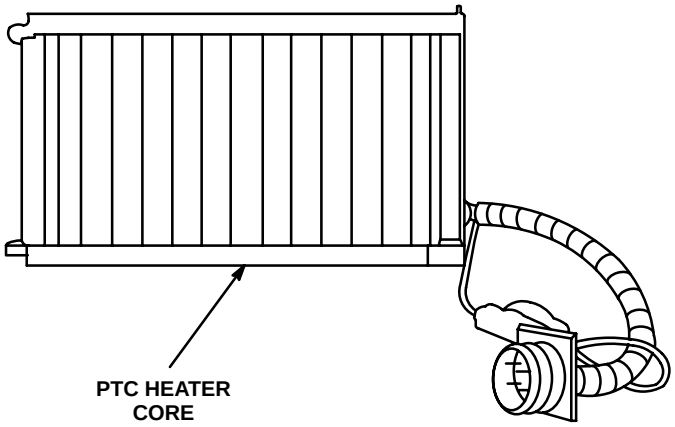

Fig. 24 PTC Heater Core

PTC HEATER CORE (Continued)

WARNING: DO NOT POWER PTC HEATER CORE OUTSIDE OF UNIT. THE FIN MATERIAL IS ELECTRICALLY LIVE WHEN THE PTC IS POWERED.

INSTALLATION

(1) Depress brake pedal and lift accelerator pedal for clearance while installing PTC heater core in HVAC.
(2) Install PTC heater core cover.
(3) Install lower silencer boot at base of steering shaft.
(4) Install I/P to body harness interconnect and bracket.
(5) Install ABS module, bracket and wiring.
(6) Install steering column assembly.
(7) Install left side lower column cover.
(8) Connect auxiliary battery negative cable.
(9) Enable the traction battery pack by turning the high voltage service disconnect switch to On.

POST INSIDE COIL THERMISTOR

REMOVAL

(1) Disable the traction battery pack by turning the high voltage service disconnect switch to Off.
(2) Disconnect and isolate the auxiliary battery negative cable.
(3) Remove HVAC unit housing. Refer to HVAC Unit Housing Removal in the standard NS Service Manual for proper procedures.

NOTE: To remove the thermistor, use a pair of large jaw pliers and rock thermistor back and forth while pulling straight down.

(4) Remove post inside coil thermistor (Fig. 25).

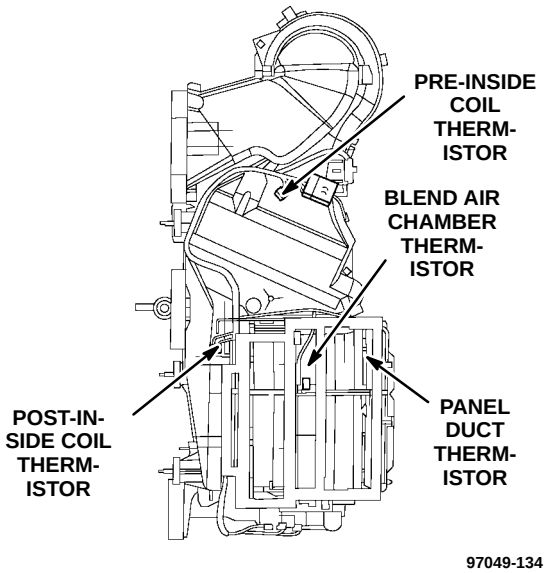

Fig. 25 Post inside Coil Thermistor

NOTE: When replacing thermistors, you must cut the thermistor wires. When installing new thermistors, solder new thermistor wires to the wires from the harness. Orientation of the wires is not important.

INSTALLATION

(1) Install post inside coil thermistor.
(2) Install HVAC unit housing. Refer to HVAC Unit Housing Installation in the standard NS Service Manual for proper procedures.
(3) Connect the auxiliary battery negative cable.
(4) Enable the traction battery pack by turning the service disconnect switch to On.

SOLID STATE BLOWER RELAY

DESCRIPTION

The HVAC blower solid state relay replaces the resistor block found in the gasoline version. It is located under the I/P to the right of the junction block. The HVAC blower speed is managed by the control head through a solid state relay.

OPERATION

The control head reads the potentiometer signal from the blower speed knob on the control head and outputs a proportional PWM duty signal to the solid state relay. The solid state relay in turn outputs a 20 kHz PWM signal to the blower motor.

SOLID STATE BLOWER RELAY (Continued)

REMOVAL

(1) Disable the traction battery pack by turning the high voltage service disconnect switch to Off.
(2) Disconnect and isolate the auxiliary battery negative cable.
(3) Remove Junction Block. Refer to Junction Block Removal procedure in the NS Service Manual.
(4) Remove dash panel mounting bracket nuts (3).
(5) Turn bracket enough to allow access to Solid State Blower Relay screws.
(6) Remove Solid State Blower Relay screws (2).
(7) Remove Solid State Blower Relay connector.
(8) Remove Solid State Blower Relay (Fig. 26).

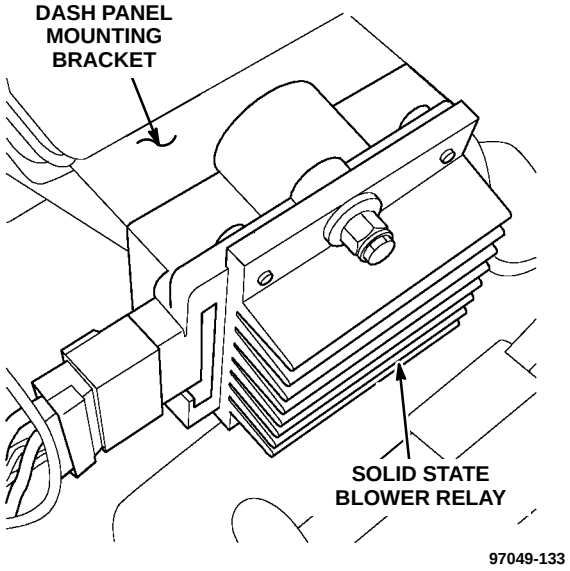

Fig. 26 Solid State Blower Relay

INSTALLATION

(1) Install Solid State Blower Relay connector.
(2) Install Solid State Blower Relay screws (2).
(3) Install dash panel mounting bracket and nuts (3).
(4) Install Junction Block. Refer to Junction Block Installation procedure in the NS Service Manual.
(5) Connect auxiliary battery negative cable.
(6) Enable the traction battery pack by turning the high voltage disconnect switch to On.

TORQUE SPECIFICATIONS

DESCRIPTION	TORQUE
A/C Compressor Mounting Bolts	28 N•m (250 in. lbs.)
A/C Lines	20.3 ± 3.4 N•m (180 ± 30 in. lbs.)
A/C Outdoor Coil Mounting Screws	5.1 ± 1.1 N•m (45 ± 10 in. lbs.)
Bi-directional Line H-block	22 N•m (200 in. lbs.)
Bi-directional Line Bracket Bolt	7N•m (65 in. lbs.)
Bi-directional Line at Filter Dryer	11 N•m (100 in. lbs.)
Compressor to Heat Exchanger Module Line Nut	20 N•m (180 in. lbs.)
Filter dryer Mounting Bolt	8 N•m (70 in. lbs)
Heat Exchanger Module TXV Block Retaining Nut	14 N•m (125 in. lbs.)
Heat Exchanger Mounting Nuts	10 N•m (95 in. lbs.)
Inside Coil Line at Comressor	22 N•m (200 in. lbs.)
Outside Coil Line at Compressor	22 N•m (200 in. lbs.)
Outside Coil to Filter Dryer Line at outside Coil	20 N•m (180 in. lbs.)
Outside Coil to Filter Dryer Line at Filter Dryer	11 N•m (100 in. lbs.)
PTC Heater Controller Mounting Bolts	6 N•m (55 in. lbs.)
Receiver Drier to Heat Exchanger Line Nut	20 N•m (180 in. lbs.)

WIRING DIAGRAMS

TABLE OF CONTENTS

PAGE

A/C COMPRESSOR 24–135, 136
A/C COMPRESSOR CONTROLLER 24–121, 126, 135, 136
A/C COMPRESSOR CONTROLLER RELAY 24–118, 121, 129
A/C COMPRESSOR TEMPERATURE SENSOR 24–134
A/C SHUT–OFF VALVE 24–120, 128
AUXILIARY BATTERY 24–122
BATTERY INTERFACE CENTER 24–126, 136
BATTERY PACK COOLANT PUMP 24–118
BLEND DOOR ACTUATOR 24–131
BODY CONTROL MODULE 24–125
BS41 . . . . . 24–118, 119, 120, 123, 124, 125, 128
DATA LINK CONNECTOR 24–129
ELECTRIC WIPER DE–ICER 24–120
EXPANSION VALVE 24–120, 128
FLOOR DUCT TEMPERATURE SENSOR 24–133
FRONT BLOWER 24–119
FRONT BLOWER JUMPER 24–119
FUSE 9 (JB) 24–120
FUSE 11 (PDC) 24–121
FUSE 17 (PDC) 24–118, 119, 120, 121, 124
FUSE 22 (PDC) 24–119
FUSE 27 (PDC) 24–122
G103 . . . . . 24–122, 127
G200 . . . . . 24–121, 123, 124, 125
G203 . . . . . 24–119, 125
G301 24–126
HIGH PRESSURE SENSOR 24–130, 131, 132, 133, 134
HVAC BLOWER SOLID STATE RELAY . . . 24–119, 128
HVAC CONTROL HEAD 24–118, 119, 120, 121, 123, 124, 125, 126, 127, 128, 129, 130, 131, 132, 133, 134, 135
HVAC WAKE–UP RELAY 24–118, 119, 120, 121, 123, 124
IGNITION SWITCH 24–118
INSIDE COIL TEMPERATURE SENSOR 24–133

PAGE

INSTRUMENT CLUSTER 24–125
JOS1 . . . . . 24–130, 131. 132, 133
JOS2 . . . . . 24–130, 131, 132, 134
JOS3 . . . . . 24–130, 131, 132
JUNCTION BLOCK 24–120, 124, 125, 129
LOW PRESSURE SENSOR 24–134
LVS1 24–122,127
LVS6 24–122
LVS9 24–127

LVS32 . . . . . 24–133, 134, 135
LVS33 . . . . . 24–130, 131, 132, 134
LVS70 . . . . . 24–118, 119, 120, 121, 123, 124, 128
MAIN CONTROL MODULE 24–118, 122
MODE DOOR ACTUATOR 24–132
OIL PUMP 24–136
PANEL DUCT TEMPERATURE SENSOR 24–133
POST–INSIDE COIL TEMPERATURE SENSOR 24–133
POWER DISTRIBUTION CENTER . . 24–118, 119, 120, 121, 122, 123, 124, 128, 129
POWER STEERING PUMP 24–126
POWERTRAIN CONTROLLER ASSEMBLY 24–126, 135, 136
PRE–INSIDE COIL TEMPERATURE SENSOR 24–133
PS1 24–129
PS2 24–129
PS10 24–129
PTC HEATER 24–126, 135
PTC HEATER CONTROLLER . . 24–118, 121, 126, 127
RADIATOR FAN 24–122
RADIATOR FAN RELAY 24–122
REAR WINDOW DEFOGGER RELAY 24–124, 129
RECIRCULATION DOOR ACTUATOR 24–130
SUCTION LINE TEMPERATURE SENSOR 24–134

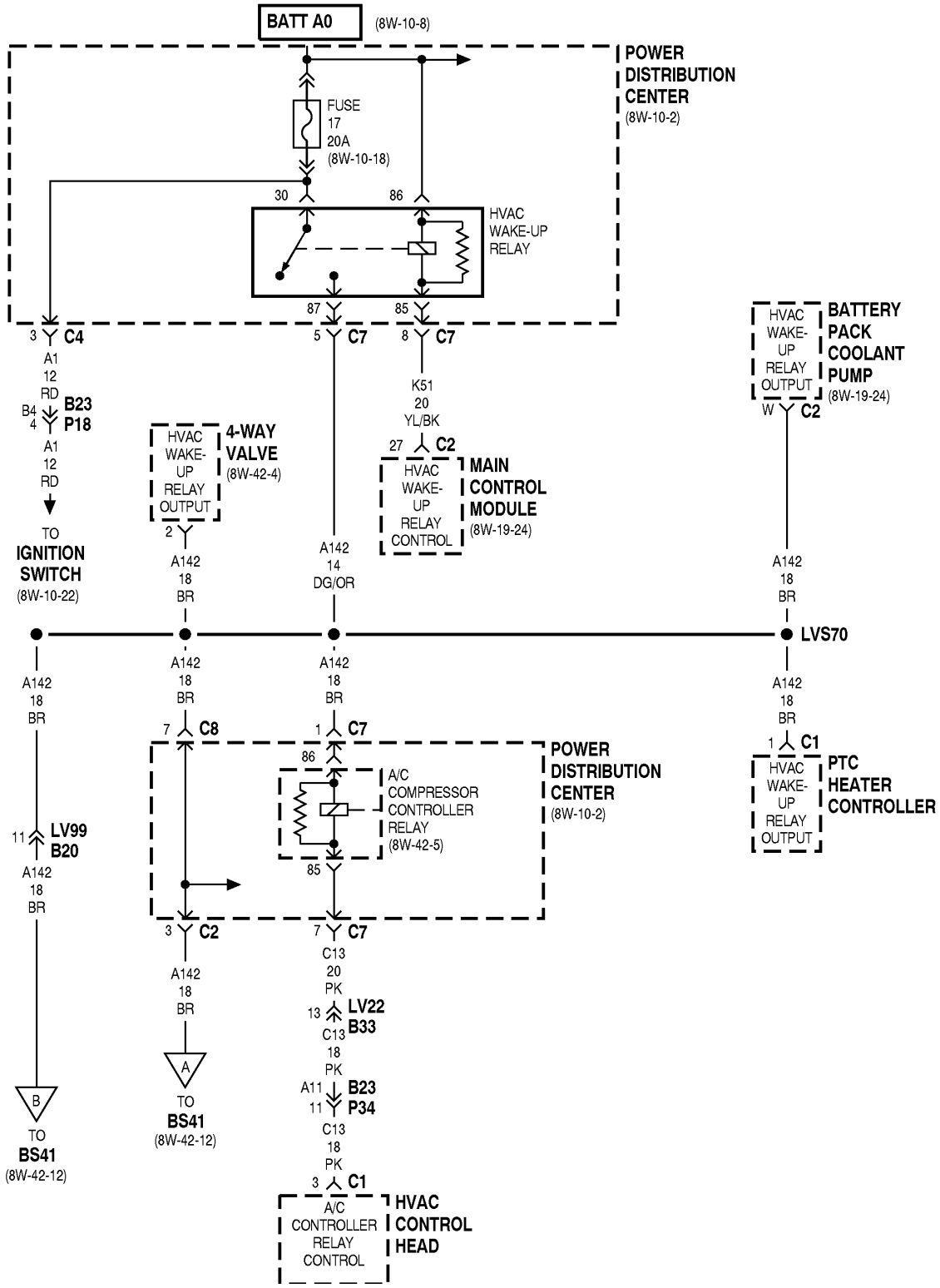
BATT A0
(8W-10-8)
POWER DISTRIBUTION CENTER
(8W-10-2)
FUSE 17 20A
(8W-10-18)
30
86
HVAC WAKE-UP RELAY
87
85
3 C4
A1 12 RD
B4 4 B23 P18
A1 12 RD
TO IGNITION SWITCH
(8W-10-22)
5 C7
8 C7
K51 20 YL/BK
27 C2
HVAC WAKE-UP RELAY CONTROL
MAIN CONTROL MODULE
(8W-19-24)
HVAC WAKE-UP RELAY OUTPUT
4-WAY VALVE
(8W-42-4)
2
A142 18 BR
A142 14 DG/OR
HVAC WAKE-UP RELAY OUTPUT
BATTERY PACK COOLANT PUMP
(8W-19-24)
W C2
A142 18 BR
LVS70
A142 18 BR
A142 18 BR
A142 18 BR
7 C8
1 C7
86
A/C COMPRESSOR CONTROLLER RELAY
(8W-42-5)
85
POWER DISTRIBUTION CENTER
(8W-10-2)
A142 18 BR
1 C1
HVAC WAKE-UP RELAY OUTPUT
PTC HEATER CONTROLLER
11 LV99 B20
A142 18 BR
3 C2
7 C7
A142 18 BR
C13 20 PK
13 LV22 B33
C13 18 PK
A11 11 B23 P34
C13 18 PK
3 C1
A/C CONTROLLER RELAY CONTROL
HVAC CONTROL HEAD
A
TO BS41
(8W-42-12)
B
TO BS41
(8W-42-12)

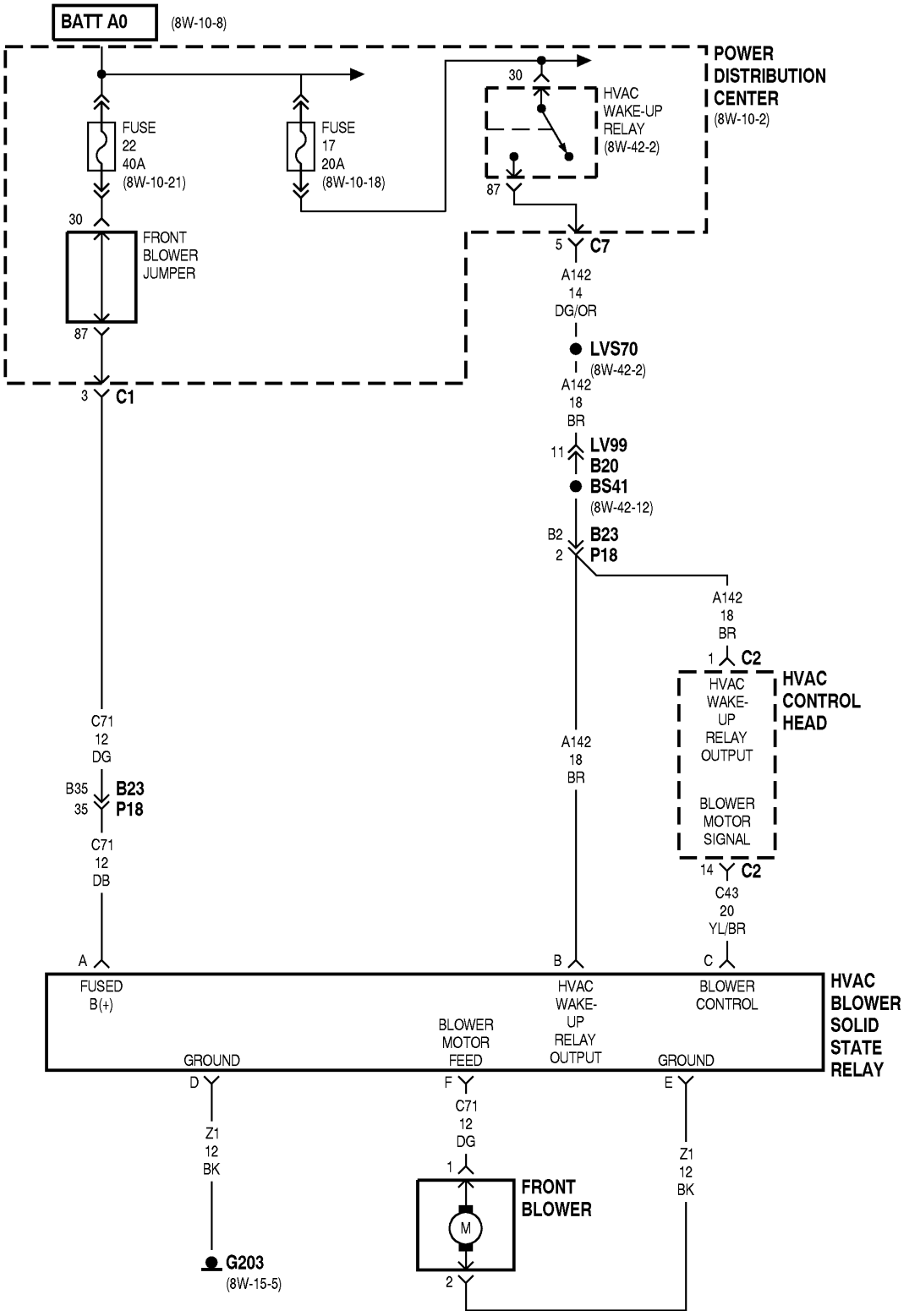
BATT A0
(8W-10-8)
POWER DISTRIBUTION CENTER
(8W-10-2)
FUSE 22 40A
(8W-10-21)
FUSE 17 20A
(8W-10-18)
30
HVAC WAKE-UP RELAY
(8W-42-2)
87
FRONT BLOWER JUMPER
5 C7
A142 14 DG/OR
LVS70
(8W-42-2)
A142 18 BR
11 LV99
B20
BS41
(8W-42-12)
B2 2 B23 P18
A142 18 BR
1 C2
HVAC CONTROL HEAD
HVAC WAKE-UP RELAY OUTPUT
BLOWER MOTOR SIGNAL
14 C2
C43 20 YL/BR
3 C1
C71 12 DG
B35 35 B23 P18
C71 12 DB
A142 18 BR
A
B
C
FUSED B(+)
HVAC WAKE-UP RELAY OUTPUT
BLOWER CONTROL
HVAC BLOWER SOLID STATE RELAY
GROUND
BLOWER MOTOR FEED
GROUND
D
F
E
Z1 12 BK
C71 12 DG
1
FRONT BLOWER
M
2
Z1 12 BK
G203
(8W-15-5)

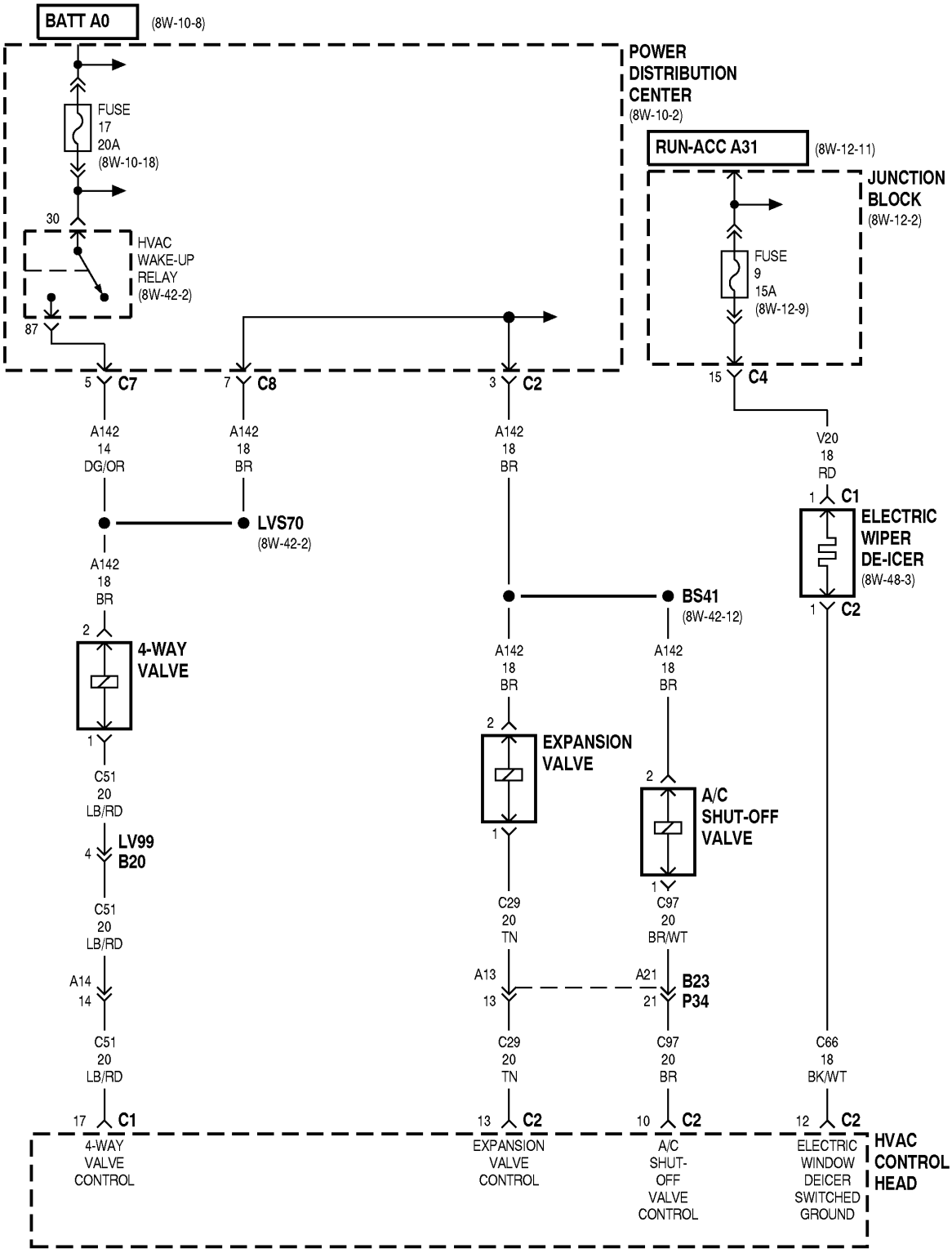
BATT A0
(8W-10-8)
POWER DISTRIBUTION CENTER
(8W-10-2)
FUSE 17 20A
(8W-10-18)
30
HVAC WAKE-UP RELAY
(8W-42-2)
87
RUN-ACC A31
(8W-12-11)
JUNCTION BLOCK
(8W-12-2)
FUSE 9 15A
(8W-12-9)
5 C7
7 C8
3 C2
15 C4
A142 14 DG/OR
A142 18 BR
A142 18 BR
V20 18 RD
1 C1
LVS70
(8W-42-2)
ELECTRIC WIPER DE-ICER
(8W-48-3)
A142 18 BR
BS41
(8W-42-12)
1 C2
2
4-WAY VALVE
1
A142 18 BR
A142 18 BR
2
EXPANSION VALVE
1
2
A/C SHUT-OFF VALVE
1
C51 20 LB/RD
LV99
B20
4
C51 20 LB/RD
C29 20 TN
C97 20 BR/WT
A14
14
A13
13
A21
21
B23
P34
C51 20 LB/RD
C29 20 TN
C97 20 BR
C66 18 BK/WT
17 C1
13 C2
10 C2
12 C2
4-WAY VALVE CONTROL
EXPANSION VALVE CONTROL
A/C SHUT-OFF VALVE CONTROL
ELECTRIC WINDOW DEICER SWITCHED GROUND
HVAC CONTROL HEAD

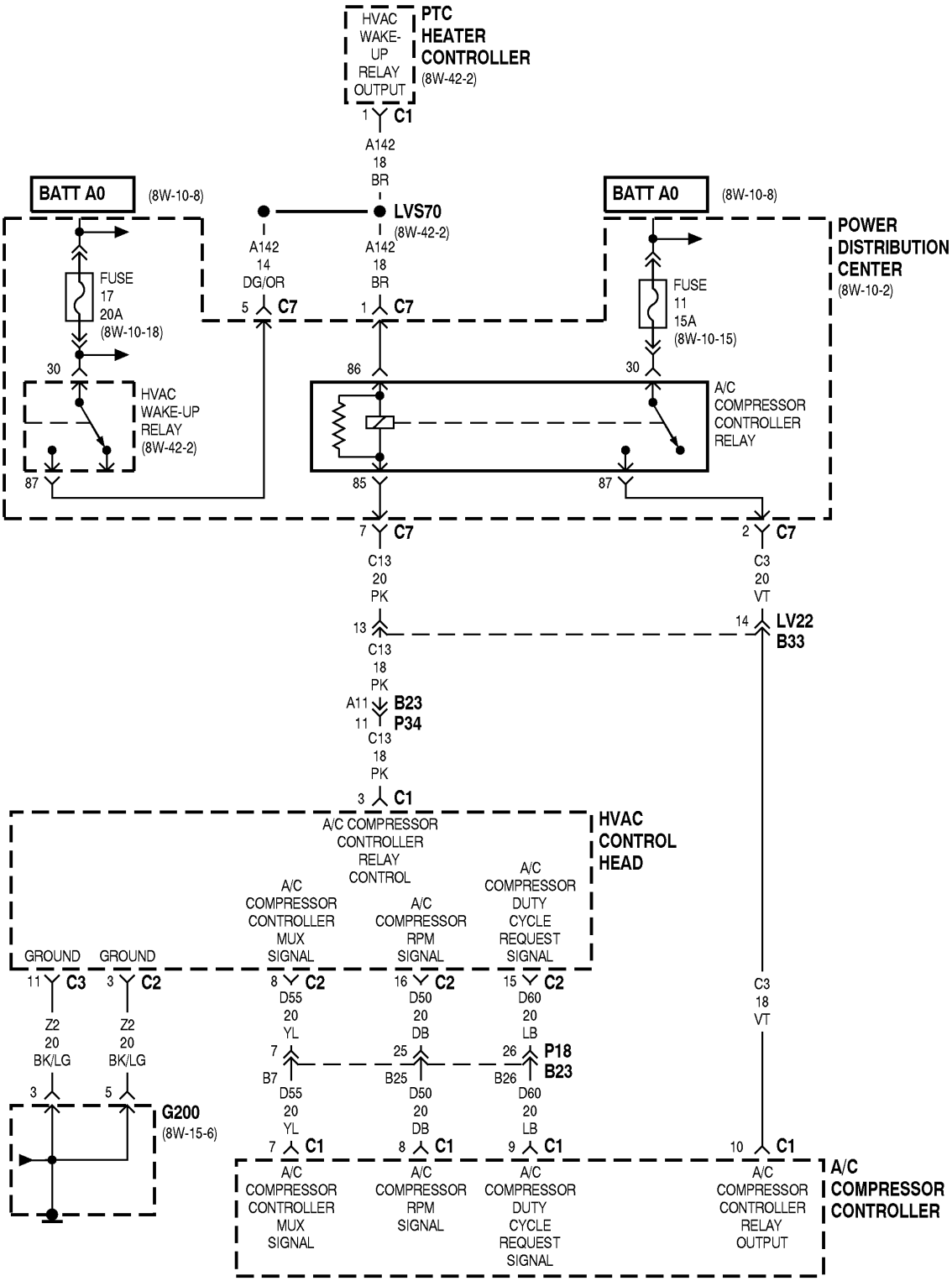
HVAC WAKE-UP RELAY OUTPUT
PTC HEATER CONTROLLER
(8W-42-2)
1 C1
A142 18 BR
BATT A0
(8W-10-8)
LVS70
(8W-42-2)
A142 14 DG/OR
A142 18 BR
5 C7
1 C7
BATT A0
(8W-10-8)
POWER DISTRIBUTION CENTER
(8W-10-2)
FUSE 17 20A
(8W-10-18)
FUSE 11 15A
(8W-10-15)
30
86
30
HVAC WAKE-UP RELAY
(8W-42-2)
A/C COMPRESSOR CONTROLLER RELAY
87
85
87
7 C7
2 C7
C13 20 PK
C3 20 VT
13
14 LV22 B33
C13 18 PK
A11 B23
11 P34
C13 18 PK
3 C1
HVAC CONTROL HEAD
A/C COMPRESSOR CONTROLLER RELAY CONTROL
A/C COMPRESSOR CONTROLLER MUX SIGNAL
A/C COMPRESSOR RPM SIGNAL
A/C COMPRESSOR DUTY CYCLE REQUEST SIGNAL
GROUND
GROUND
11 C3
3 C2
8 C2
16 C2
15 C2
Z2 20 BK/LG
Z2 20 BK/LG
D55 20 YL
D50 20 DB
D60 20 LB
C3 18 VT
7
25
26 P18 B23
3
5
B7
B25
B26
G200
(8W-15-6)
D55 20 YL
D50 20 DB
D60 20 LB
7 C1
8 C1
9 C1
10 C1
A/C COMPRESSOR CONTROLLER MUX SIGNAL
A/C COMPRESSOR RPM SIGNAL
A/C COMPRESSOR DUTY CYCLE REQUEST SIGNAL
A/C COMPRESSOR CONTROLLER RELAY OUTPUT
A/C COMPRESSOR CONTROLLER

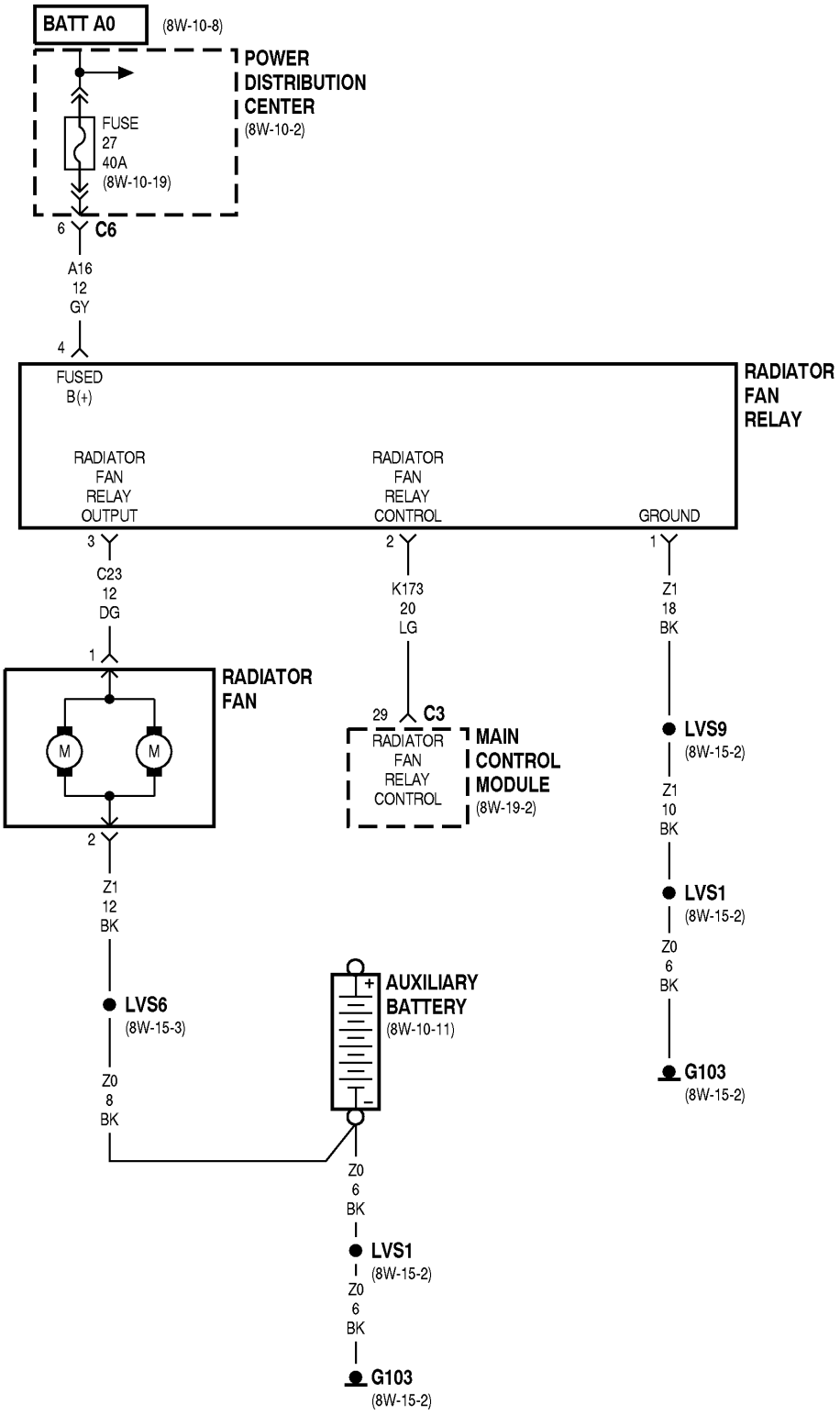
BATT A0
(8W-10-8)
POWER DISTRIBUTION CENTER
(8W-10-2)
FUSE 27 40A
(8W-10-19)
6
C6
A16 12 GY
4
FUSED B(+)
RADIATOR FAN RELAY
RADIATOR FAN RELAY OUTPUT
RADIATOR FAN RELAY CONTROL
GROUND
3
2
1
C23 12 DG
K173 20 LG
Z1 18 BK
1
RADIATOR FAN
M
M
2
29
C3
RADIATOR FAN RELAY CONTROL
MAIN CONTROL MODULE
(8W-19-2)
LVS9
(8W-15-2)
Z1 10 BK
LVS1
(8W-15-2)
Z0 6 BK
G103
(8W-15-2)
Z1 12 BK
LVS6
(8W-15-3)
Z0 8 BK
AUXILIARY BATTERY
(8W-10-11)
+
–
Z0 6 BK
LVS1
(8W-15-2)
Z0 6 BK
G103
(8W-15-2)

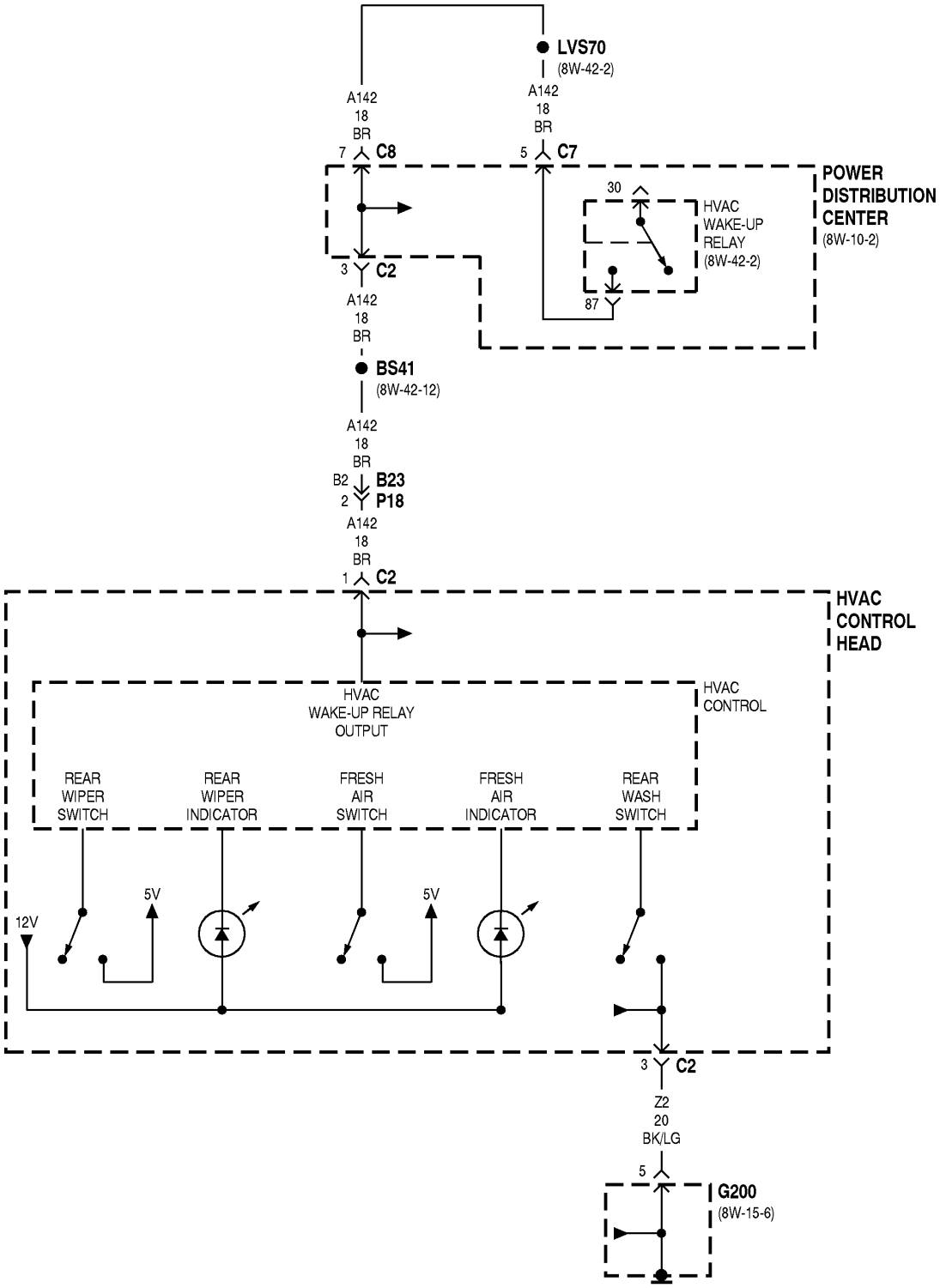
LVS70
(8W-42-2)
A142
18
BR
A142
18
BR
7
C8
5
C7
POWER
DISTRIBUTION
CENTER
(8W-10-2)
30
HVAC
WAKE-UP
RELAY
(8W-42-2)
87
3
C2
A142
18
BR
BS41
(8W-42-12)
A142
18
BR
B2
B23
2
P18
A142
18
BR
1
C2
HVAC
CONTROL
HEAD
HVAC
WAKE-UP RELAY
OUTPUT
HVAC
CONTROL
REAR
WIPER
SWITCH
REAR
WIPER
INDICATOR
FRESH
AIR
SWITCH
FRESH
AIR
INDICATOR
REAR
WASH
SWITCH
12V
5V
5V
3
C2
Z2
20
BK/LG
5
G200
(8W-15-6)

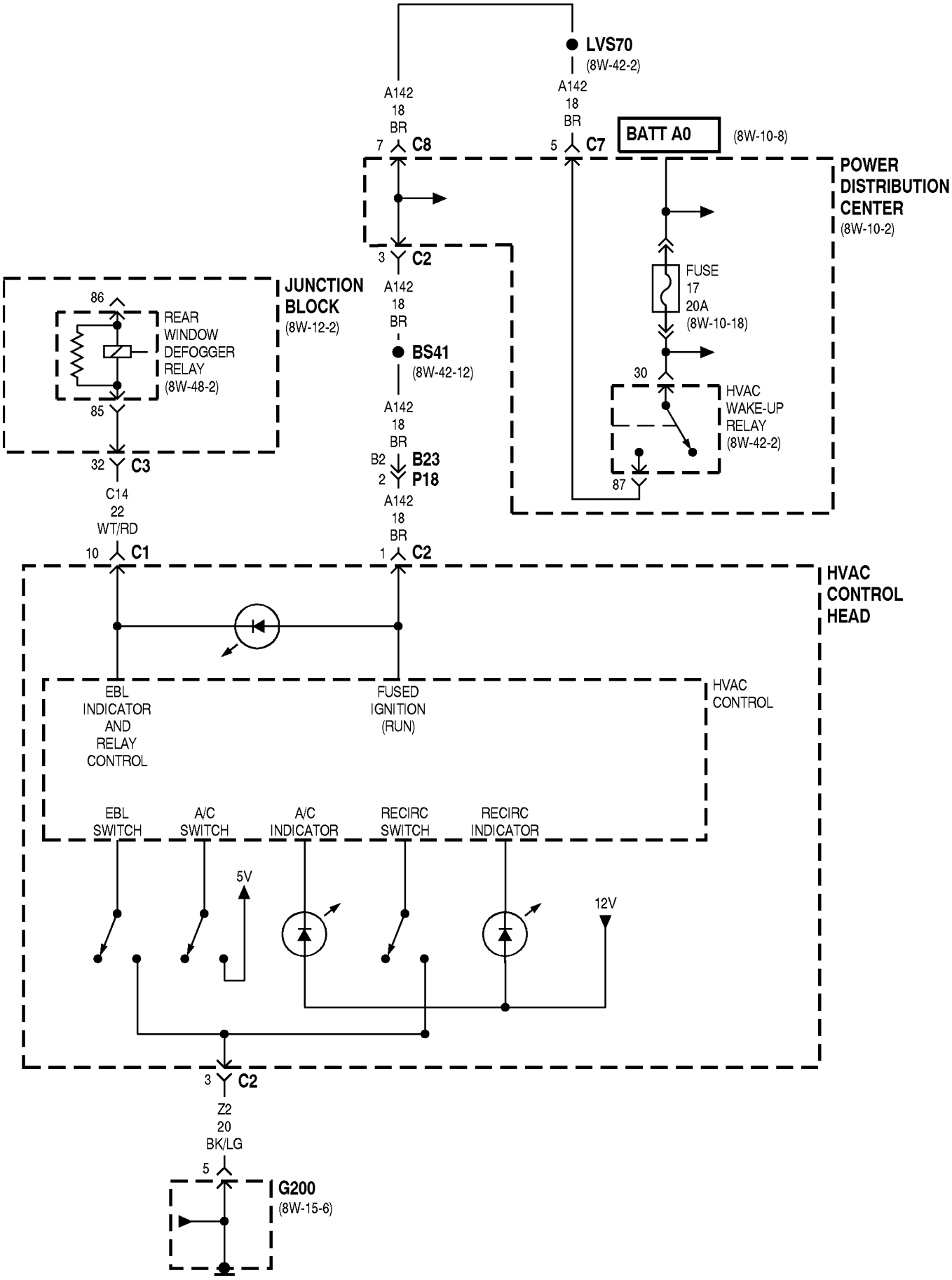
LVS70
(8W-42-2)
A142
18
BR
7 C8
A142
18
BR
5 C7
BATT A0
(8W-10-8)
POWER
DISTRIBUTION
CENTER
(8W-10-2)
3 C2
A142
18
BR
FUSE
17
20A
(8W-10-18)
JUNCTION
BLOCK
(8W-12-2)
86
REAR
WINDOW
DEFOGGER
RELAY
(8W-48-2)
85
BS41
(8W-42-12)
30
HVAC
WAKE-UP
RELAY
(8W-42-2)
A142
18
BR
B2 B23
2 P18
87
32 C3
C14
22
WT/RD
A142
18
BR
10 C1
1 C2
HVAC
CONTROL
HEAD
EBL
INDICATOR
AND
RELAY
CONTROL
FUSED
IGNITION
(RUN)
HVAC
CONTROL
EBL
SWITCH
A/C
SWITCH
A/C
INDICATOR
RECIRC
SWITCH
RECIRC
INDICATOR
5V
12V
3 C2
Z2
20
BK/LG
5
G200
(8W-15-6)

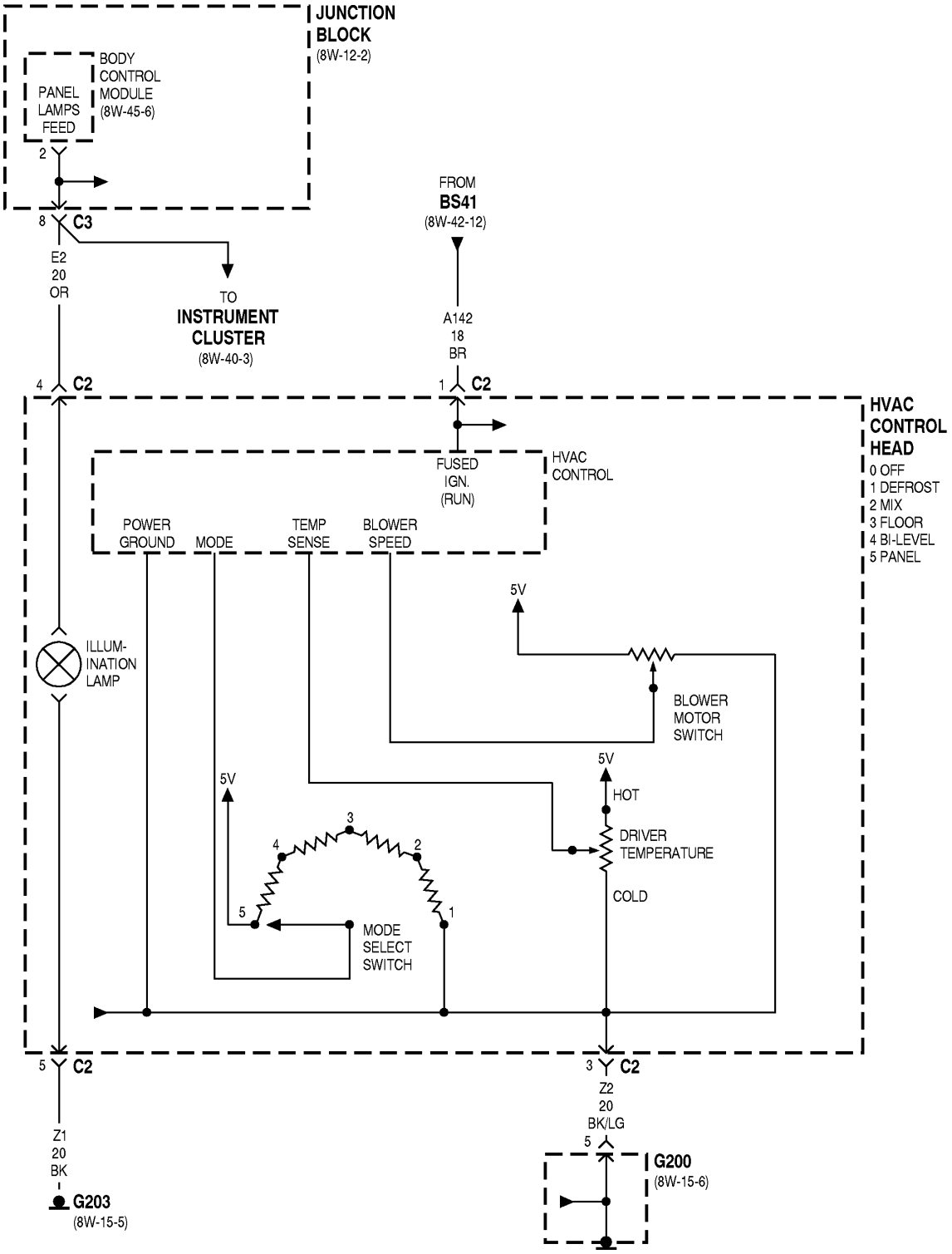
JUNCTION BLOCK
(8W-12-2)
BODY CONTROL MODULE
(8W-45-6)
PANEL LAMPS FEED
2
8
C3
E2
20
OR
TO
INSTRUMENT CLUSTER
(8W-40-3)
FROM
BS41
(8W-42-12)
A142
18
BR
4
C2
1
C2
HVAC CONTROL HEAD
0 OFF
1 DEFROST
2 MIX
3 FLOOR
4 BI-LEVEL
5 PANEL
HVAC CONTROL
FUSED IGN. (RUN)
POWER GROUND
MODE
TEMP SENSE
BLOWER SPEED
5V
ILLUM-INATION LAMP
BLOWER MOTOR SWITCH
5V
HOT
DRIVER TEMPERATURE
COLD
5V
3
4
2
5
1
MODE SELECT SWITCH
5
C2
3
C2
Z2
20
BK/LG
5
G200
(8W-15-6)
Z1
20
BK
G203
(8W-15-5)

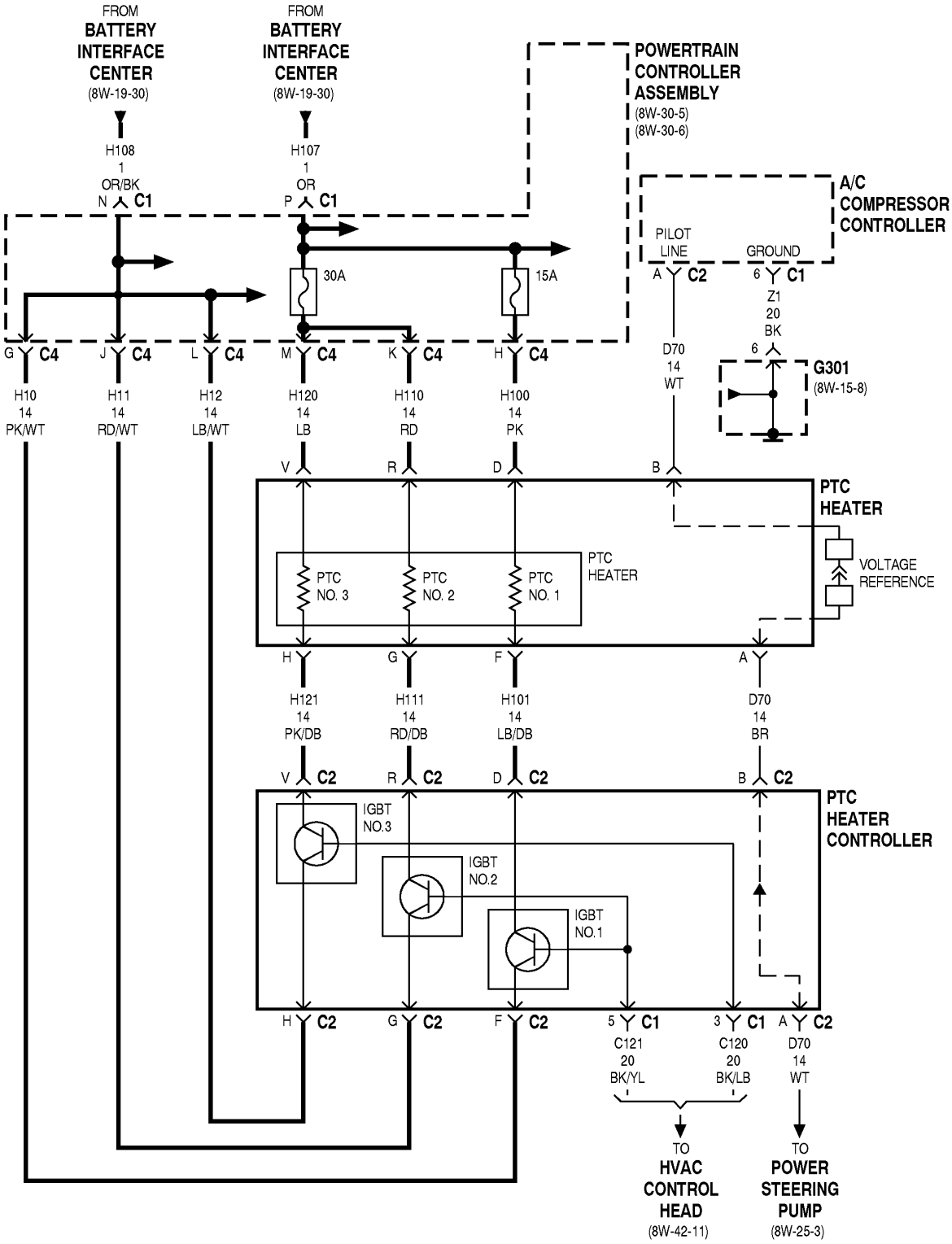
FROM
BATTERY
INTERFACE
CENTER
(8W-19-30)
H108
1
OR/BK
N C1
FROM
BATTERY
INTERFACE
CENTER
(8W-19-30)
H107
1
OR
P C1
POWERTRAIN
CONTROLLER
ASSEMBLY
(8W-30-5)
(8W-30-6)
A/C
COMPRESSOR
CONTROLLER
PILOT
LINE
GROUND
A C2
6 C1
Z1
20
BK
30A
15A
G C4
J C4
L C4
M C4
K C4
H C4
D70
14
WT
6
G301
(8W-15-8)
H10
14
PK/WT
H11
14
RD/WT
H12
14
LB/WT
H120
14
LB
H110
14
RD
H100
14
PK
V
R
D
B
PTC
HEATER
PTC
NO. 3
PTC
NO. 2
PTC
NO. 1
PTC
HEATER
VOLTAGE
REFERENCE
H
G
F
A
H121
14
PK/DB
H111
14
RD/DB
H101
14
LB/DB
D70
14
BR
V C2
R C2
D C2
B C2
PTC
HEATER
CONTROLLER
IGBT
NO.3
IGBT
NO.2
IGBT
NO.1
H C2
G C2
F C2
5 C1
3 C1
A C2
C121
20
BK/YL
C120
20
BK/LB
D70
14
WT
TO
HVAC
CONTROL
HEAD
(8W-42-11)
TO
POWER
STEERING
PUMP
(8W-25-3)

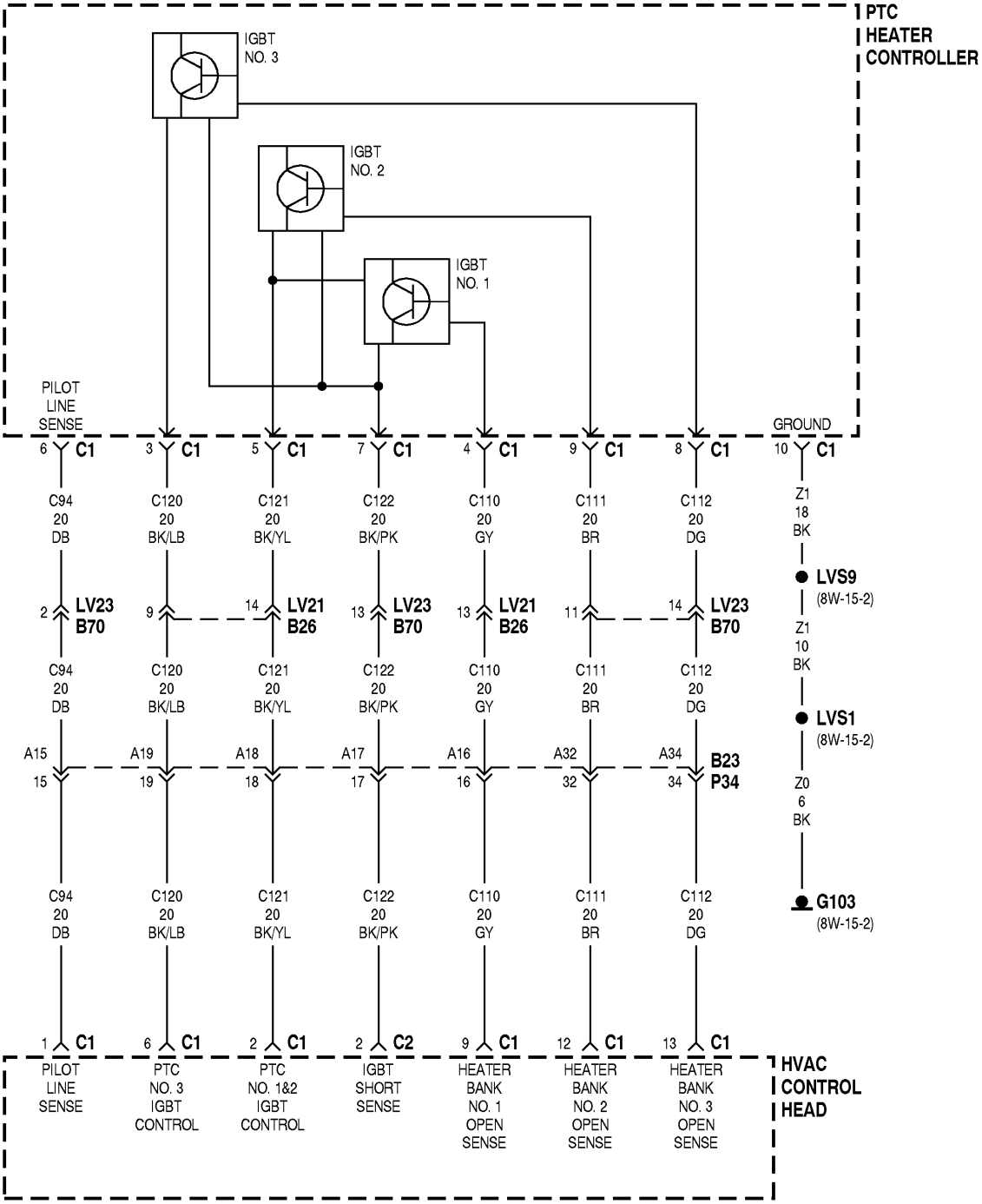
PTC HEATER CONTROLLER
IGBT NO. 3
IGBT NO. 2
IGBT NO. 1
PILOT LINE SENSE
GROUND
6 C1
3 C1
5 C1
7 C1
4 C1
9 C1
8 C1
10 C1
C94 20 DB
C120 20 BK/LB
C121 20 BK/YL
C122 20 BK/PK
C110 20 GY
C111 20 BR
C112 20 DG
Z1 18 BK
LVS9 (8W-15-2)
Z1 10 BK
LVS1 (8W-15-2)
Z0 6 BK
G103 (8W-15-2)
2 LV23 B70
9
14 LV21 B26
13 LV23 B70
13 LV21 B26
11
14 LV23 B70
A15
A19
A18
A17
A16
A32
A34
B23 P34
15
19
18
17
16
32
34
1 C1
6 C1
2 C1
2 C2
9 C1
12 C1
13 C1
PILOT LINE SENSE
PTC NO. 3 IGBT CONTROL
PTC NO. 1&2 IGBT CONTROL
IGBT SHORT SENSE
HEATER BANK NO. 1 OPEN SENSE
HEATER BANK NO. 2 OPEN SENSE
HEATER BANK NO. 3 OPEN SENSE
HVAC CONTROL HEAD

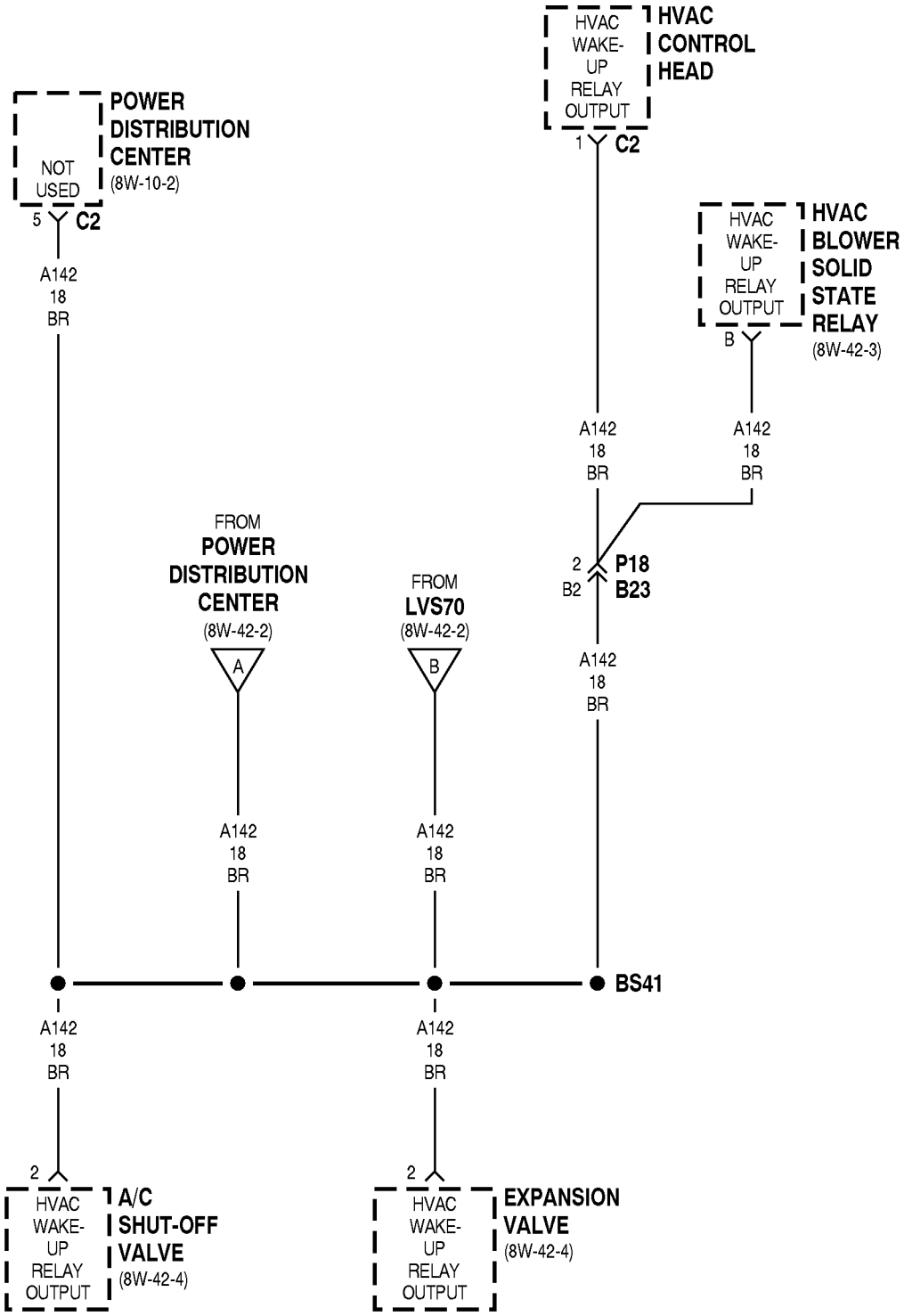
HVAC WAKE-UP RELAY OUTPUT
HVAC CONTROL HEAD
1
C2
POWER DISTRIBUTION CENTER
(8W-10-2)
NOT USED
5
C2
A142 18 BR
HVAC WAKE-UP RELAY OUTPUT
HVAC BLOWER SOLID STATE RELAY
(8W-42-3)
B
A142 18 BR
A142 18 BR
FROM POWER DISTRIBUTION CENTER
(8W-42-2)
A
FROM LVS70
(8W-42-2)
B
2
B2
P18
B23
A142 18 BR
A142 18 BR
A142 18 BR
BS41
A142 18 BR
A142 18 BR
2
HVAC WAKE-UP RELAY OUTPUT
A/C SHUT-OFF VALVE
(8W-42-4)
2
HVAC WAKE-UP RELAY OUTPUT
EXPANSION VALVE
(8W-42-4)

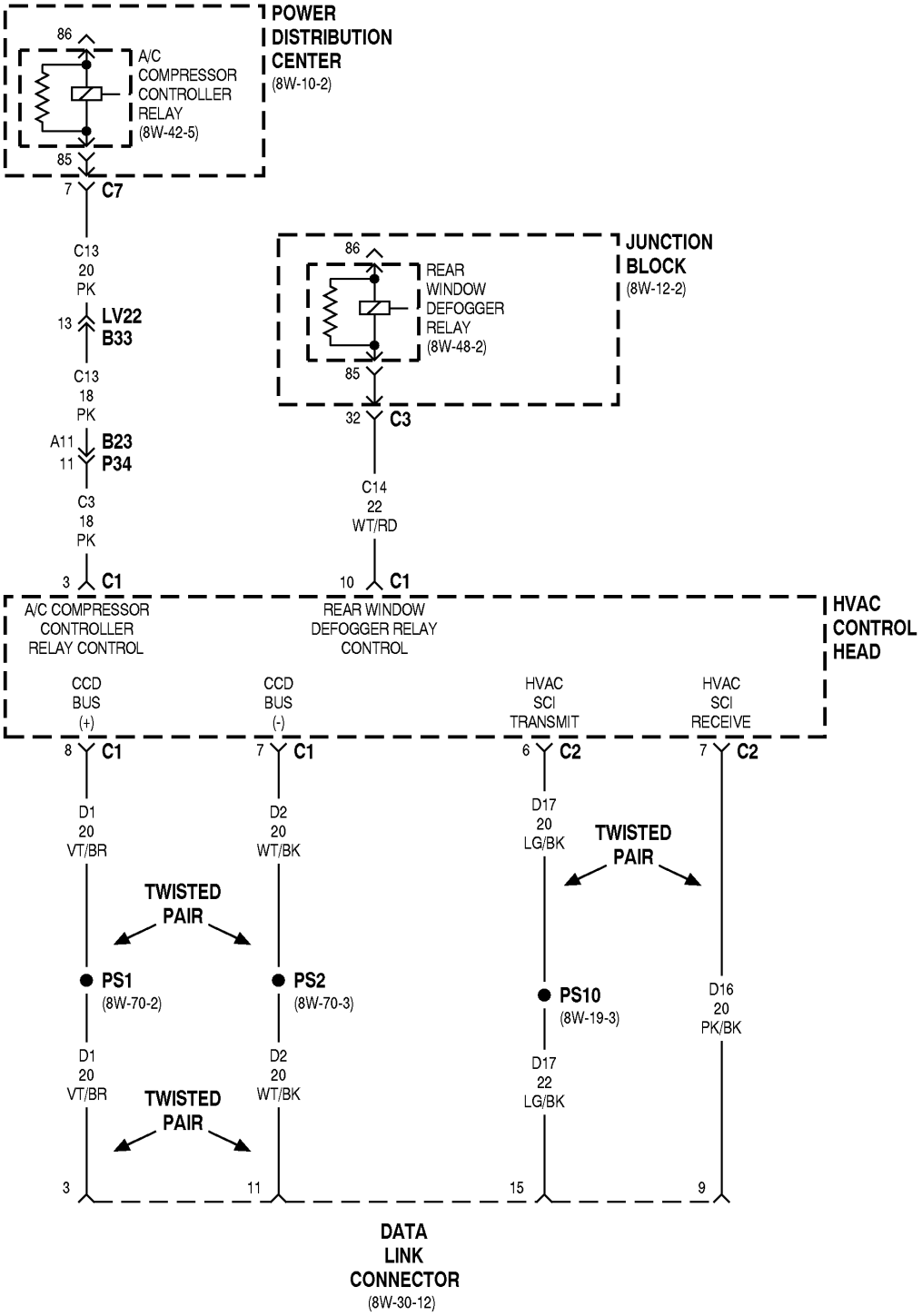
POWER DISTRIBUTION CENTER
(8W-10-2)
86
A/C COMPRESSOR CONTROLLER RELAY
(8W-42-5)
85
7 C7
C13
20
PK
13 LV22
B33
C13
18
PK
A11 B23
11 P34
C3
18
PK
3 C1
JUNCTION BLOCK
(8W-12-2)
86
REAR WINDOW DEFOGGER RELAY
(8W-48-2)
85
32 C3
C14
22
WT/RD
10 C1
HVAC CONTROL HEAD
A/C COMPRESSOR CONTROLLER RELAY CONTROL
REAR WINDOW DEFOGGER RELAY CONTROL
CCD BUS (+)
CCD BUS (-)
HVAC SCI TRANSMIT
HVAC SCI RECEIVE
8 C1
7 C1
6 C2
7 C2
D1
20
VT/BR
D2
20
WT/BK
D17
20
LG/BK
TWISTED PAIR
TWISTED PAIR
PS1
(8W-70-2)
PS2
(8W-70-3)
PS10
(8W-19-3)
D16
20
PK/BK
D1
20
VT/BR
D2
20
WT/BK
D17
22
LG/BK
TWISTED PAIR
3
11
15
9
DATA LINK CONNECTOR
(8W-30-12)

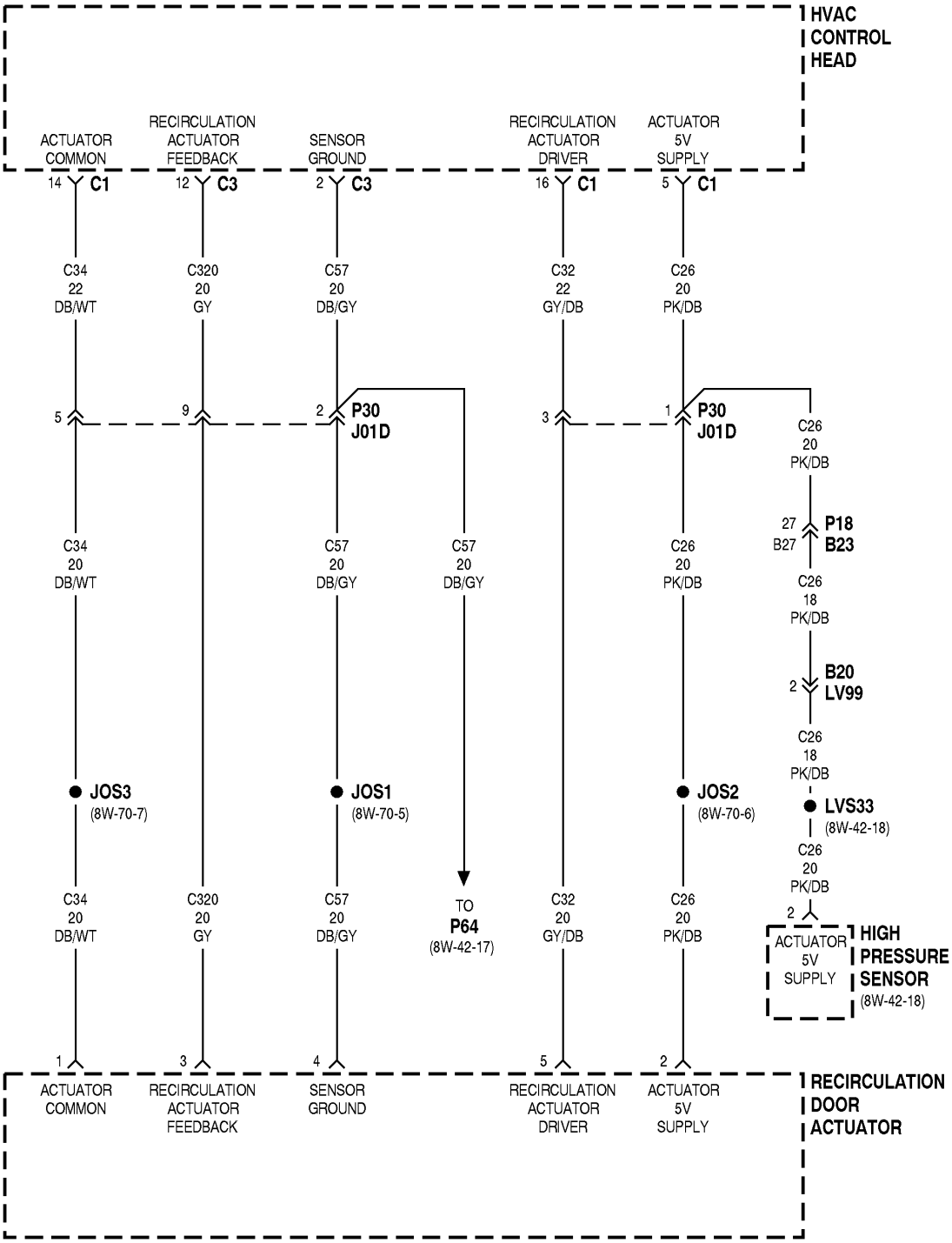
HVAC CONTROL HEAD
ACTUATOR COMMON
RECIRCULATION ACTUATOR FEEDBACK
SENSOR GROUND
RECIRCULATION ACTUATOR DRIVER
ACTUATOR 5V SUPPLY
14 C1
12 C3
2 C3
16 C1
5 C1
C34 22 DB/WT
C320 20 GY
C57 20 DB/GY
C32 22 GY/DB
C26 20 PK/DB
5
9
2 P30 J01D
3
1 P30 J01D
C26 20 PK/DB
27 B27 P18 B23
C26 18 PK/DB
2 B20 LV99
C26 18 PK/DB
LVS33 (8W-42-18)
C26 20 PK/DB
C34 20 DB/WT
C57 20 DB/GY
C57 20 DB/GY
C26 20 PK/DB
JOS3 (8W-70-7)
JOS1 (8W-70-5)
JOS2 (8W-70-6)
C34 20 DB/WT
C320 20 GY
C57 20 DB/GY
TO P64 (8W-42-17)
C32 20 GY/DB
C26 20 PK/DB
2
ACTUATOR 5V SUPPLY
HIGH PRESSURE SENSOR (8W-42-18)
1
3
4
5
2
ACTUATOR COMMON
RECIRCULATION ACTUATOR FEEDBACK
SENSOR GROUND
RECIRCULATION ACTUATOR DRIVER
ACTUATOR 5V SUPPLY
RECIRCULATION DOOR ACTUATOR

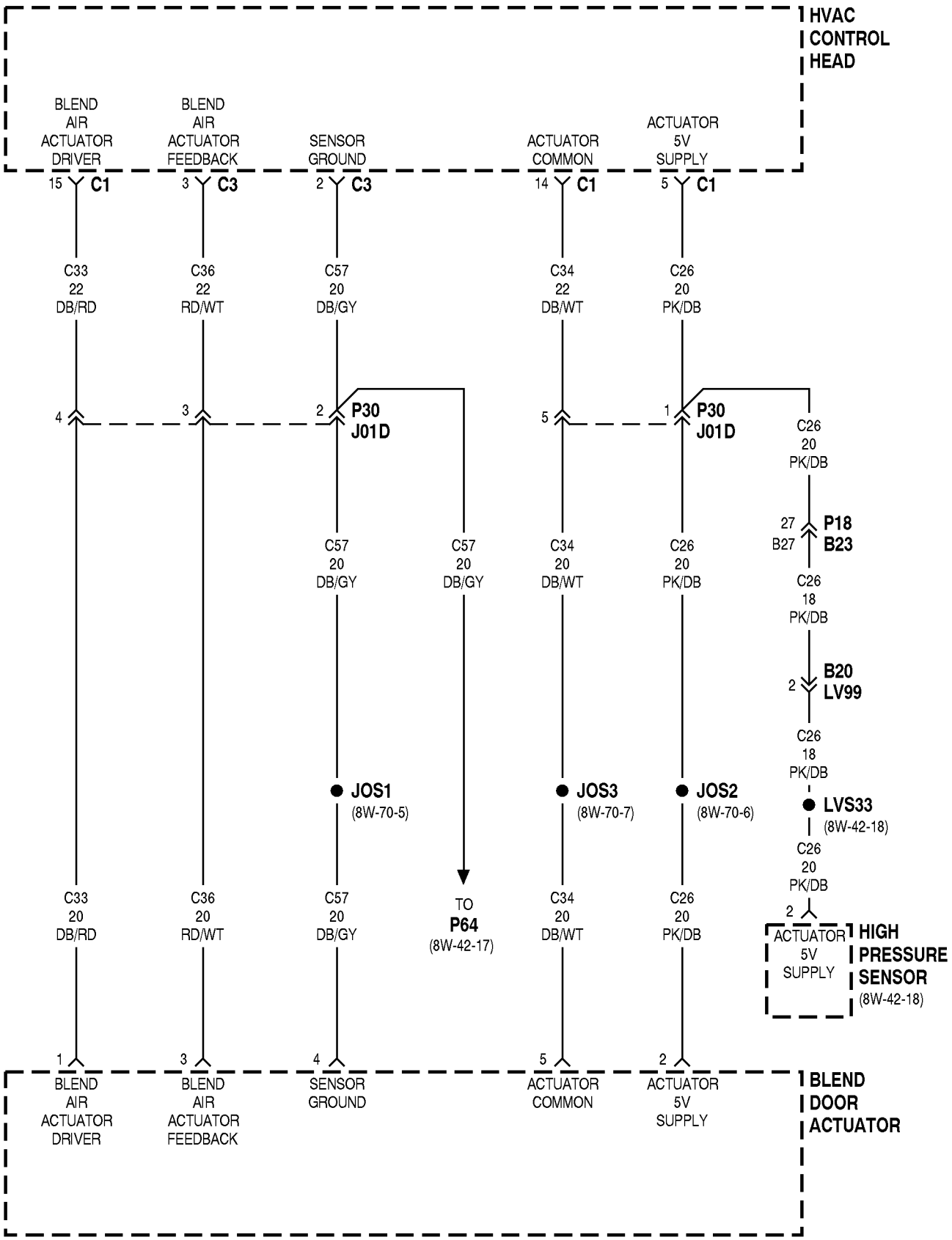
HVAC CONTROL HEAD
BLEND AIR ACTUATOR DRIVER
BLEND AIR ACTUATOR FEEDBACK
SENSOR GROUND
ACTUATOR COMMON
ACTUATOR 5V SUPPLY
15 C1
3 C3
2 C3
14 C1
5 C1
C33 22 DB/RD
C36 22 RD/WT
C57 20 DB/GY
C34 22 DB/WT
C26 20 PK/DB
4
3
2 P30 J01D
5
1 P30 J01D
C26 20 PK/DB
27 B27 P18 B23
C57 20 DB/GY
C57 20 DB/GY
C34 20 DB/WT
C26 20 PK/DB
C26 18 PK/DB
2 B20 LV99
C26 18 PK/DB
JOS1 (8W-70-5)
JOS3 (8W-70-7)
JOS2 (8W-70-6)
LVS33 (8W-42-18)
C26 20 PK/DB
C33 20 DB/RD
C36 20 RD/WT
C57 20 DB/GY
TO P64 (8W-42-17)
C34 20 DB/WT
C26 20 PK/DB
2
ACTUATOR 5V SUPPLY
HIGH PRESSURE SENSOR (8W-42-18)
1
3
4
5
2
BLEND AIR ACTUATOR DRIVER
BLEND AIR ACTUATOR FEEDBACK
SENSOR GROUND
ACTUATOR COMMON
ACTUATOR 5V SUPPLY
BLEND DOOR ACTUATOR

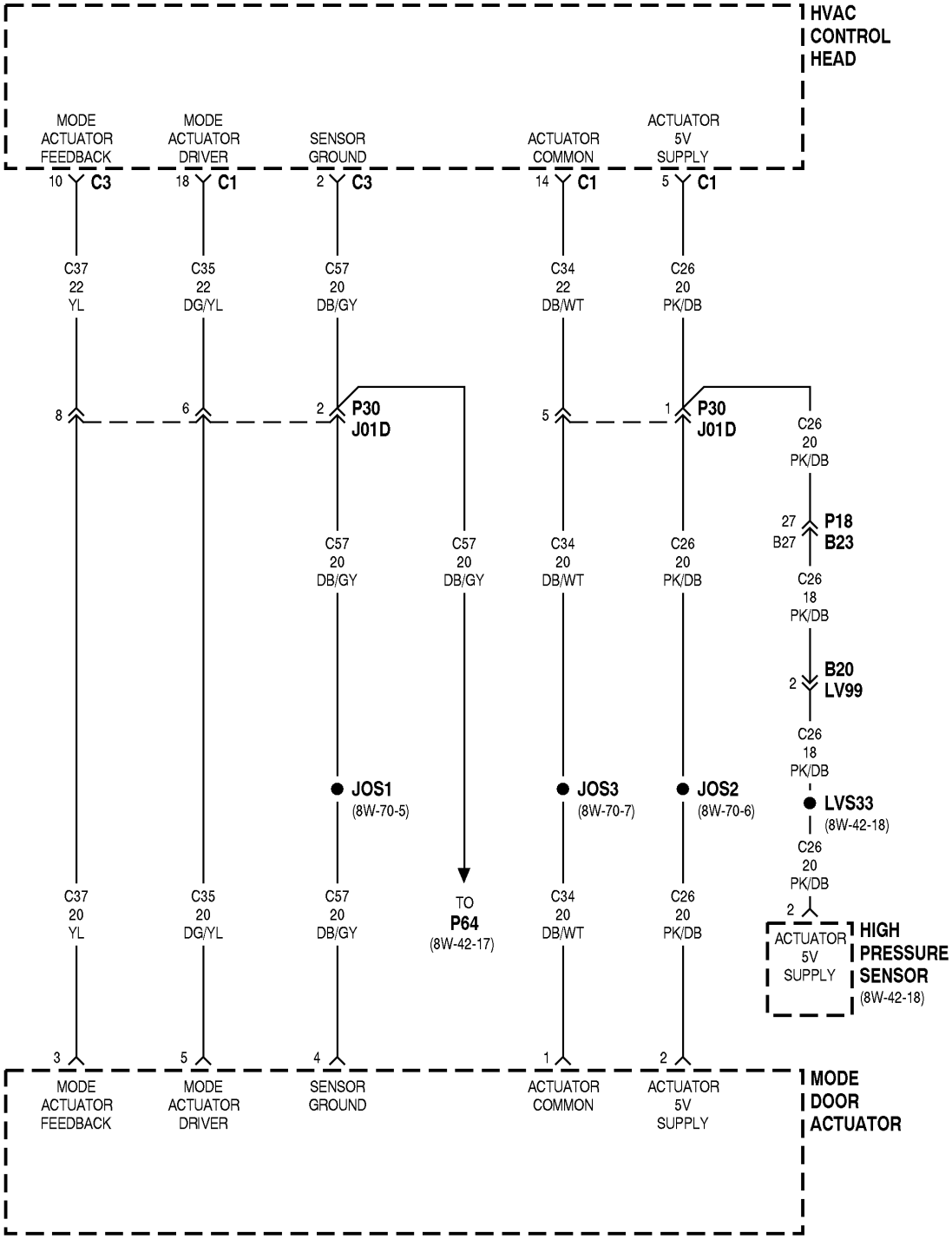
HVAC CONTROL HEAD
MODE ACTUATOR FEEDBACK
MODE ACTUATOR DRIVER
SENSOR GROUND
ACTUATOR COMMON
ACTUATOR 5V SUPPLY
10 C3
18 C1
2 C3
14 C1
5 C1
C37 22 YL
C35 22 DG/YL
C57 20 DB/GY
C34 22 DB/WT
C26 20 PK/DB
8
6
2 P30 J01D
5
1 P30 J01D
C26 20 PK/DB
27 B27 P18 B23
C57 20 DB/GY
C57 20 DB/GY
C34 20 DB/WT
C26 20 PK/DB
C26 18 PK/DB
2 B20 LV99
C26 18 PK/DB
JOS1 (8W-70-5)
JOS3 (8W-70-7)
JOS2 (8W-70-6)
LVS33 (8W-42-18)
C26 20 PK/DB
C37 20 YL
C35 20 DG/YL
C57 20 DB/GY
TO P64 (8W-42-17)
C34 20 DB/WT
C26 20 PK/DB
2
ACTUATOR 5V SUPPLY
HIGH PRESSURE SENSOR (8W-42-18)
3
5
4
1
2
MODE ACTUATOR FEEDBACK
MODE ACTUATOR DRIVER
SENSOR GROUND
ACTUATOR COMMON
ACTUATOR 5V SUPPLY
MODE DOOR ACTUATOR

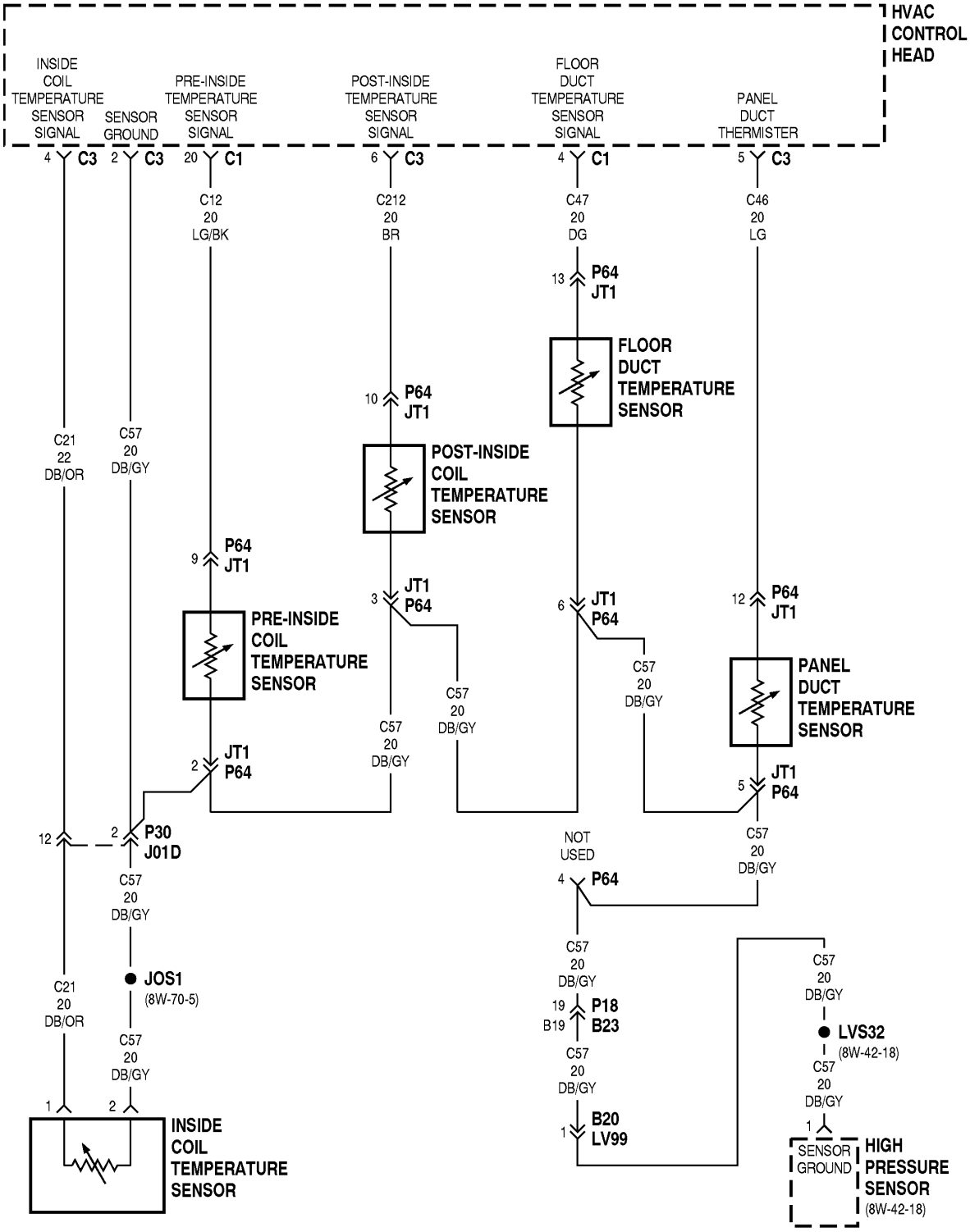
HVAC CONTROL HEAD
INSIDE COIL TEMPERATURE SENSOR SIGNAL
SENSOR GROUND
PRE-INSIDE TEMPERATURE SENSOR SIGNAL
POST-INSIDE TEMPERATURE SENSOR SIGNAL
FLOOR DUCT TEMPERATURE SENSOR SIGNAL
PANEL DUCT THERMISTER
4 C3
2 C3
20 C1
6 C3
4 C1
5 C3
C12 20 LG/BK
C212 20 BR
C47 20 DG
C46 20 LG
13 P64 JT1
FLOOR DUCT TEMPERATURE SENSOR
10 P64 JT1
POST-INSIDE COIL TEMPERATURE SENSOR
C21 22 DB/OR
C57 20 DB/GY
9 P64 JT1
PRE-INSIDE COIL TEMPERATURE SENSOR
3 JT1 P64
6 JT1 P64
12 P64 JT1
PANEL DUCT TEMPERATURE SENSOR
C57 20 DB/GY
C57 20 DB/GY
C57 20 DB/GY
2 JT1 P64
5 JT1 P64
12
2 P30 J01D
NOT USED
4 P64
C57 20 DB/GY
C57 20 DB/GY
C57 20 DB/GY
JOS1 (8W-70-5)
C21 20 DB/OR
C57 20 DB/GY
19 P18
B19 B23
C57 20 DB/GY
LVS32 (8W-42-18)
C57 20 DB/GY
C57 20 DB/GY
1
2
INSIDE COIL TEMPERATURE SENSOR
1 B20 LV99
1
SENSOR GROUND
HIGH PRESSURE SENSOR (8W-42-18)

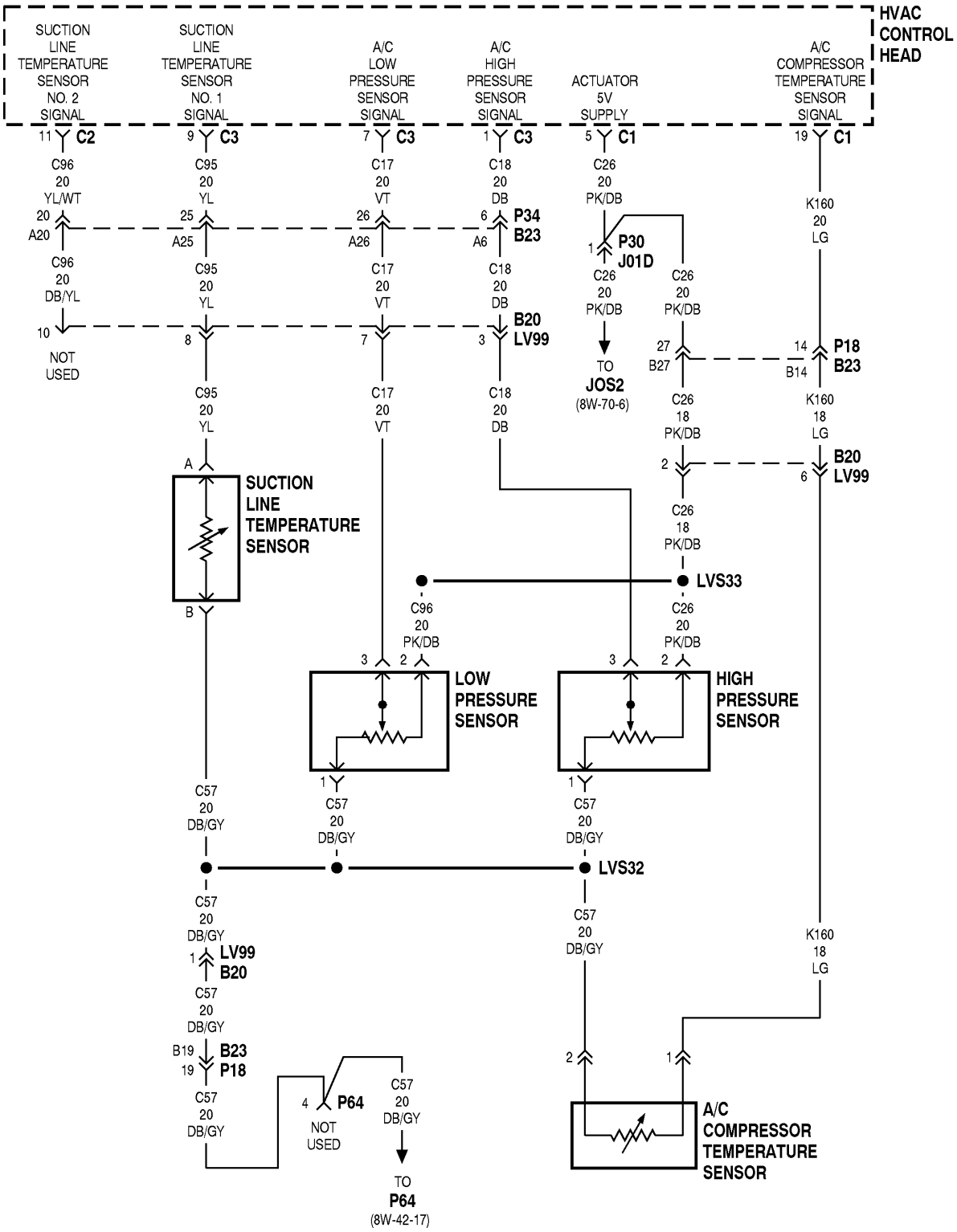
HVAC CONTROL HEAD
SUCTION LINE TEMPERATURE SENSOR NO. 2 SIGNAL
SUCTION LINE TEMPERATURE SENSOR NO. 1 SIGNAL
A/C LOW PRESSURE SENSOR SIGNAL
A/C HIGH PRESSURE SENSOR SIGNAL
ACTUATOR 5V SUPPLY
A/C COMPRESSOR TEMPERATURE SENSOR SIGNAL
11 C2
9 C3
7 C3
1 C3
5 C1
19 C1
C96 20 YL/WT
C95 20 YL
C17 20 VT
C18 20 DB
C26 20 PK/DB
K160 20 LG
20 A20
25 A25
26 A26
6 A6
P34 B23
P30 J01D
C96 20 DB/YL
10 NOT USED
8
7
3
B20 LV99
TO JOS2 (8W-70-6)
27 B27
14 B14
P18 B23
C26 18 PK/DB
K160 18 LG
2
6
B20 LV99
A
B
SUCTION LINE TEMPERATURE SENSOR
LVS33
C96 20 PK/DB
C26 20 PK/DB
3
2
LOW PRESSURE SENSOR
HIGH PRESSURE SENSOR
1
C57 20 DB/GY
LVS32
LV99 B20
B19 19
B23 P18
4 P64
NOT USED
TO P64 (8W-42-17)
A/C COMPRESSOR TEMPERATURE SENSOR

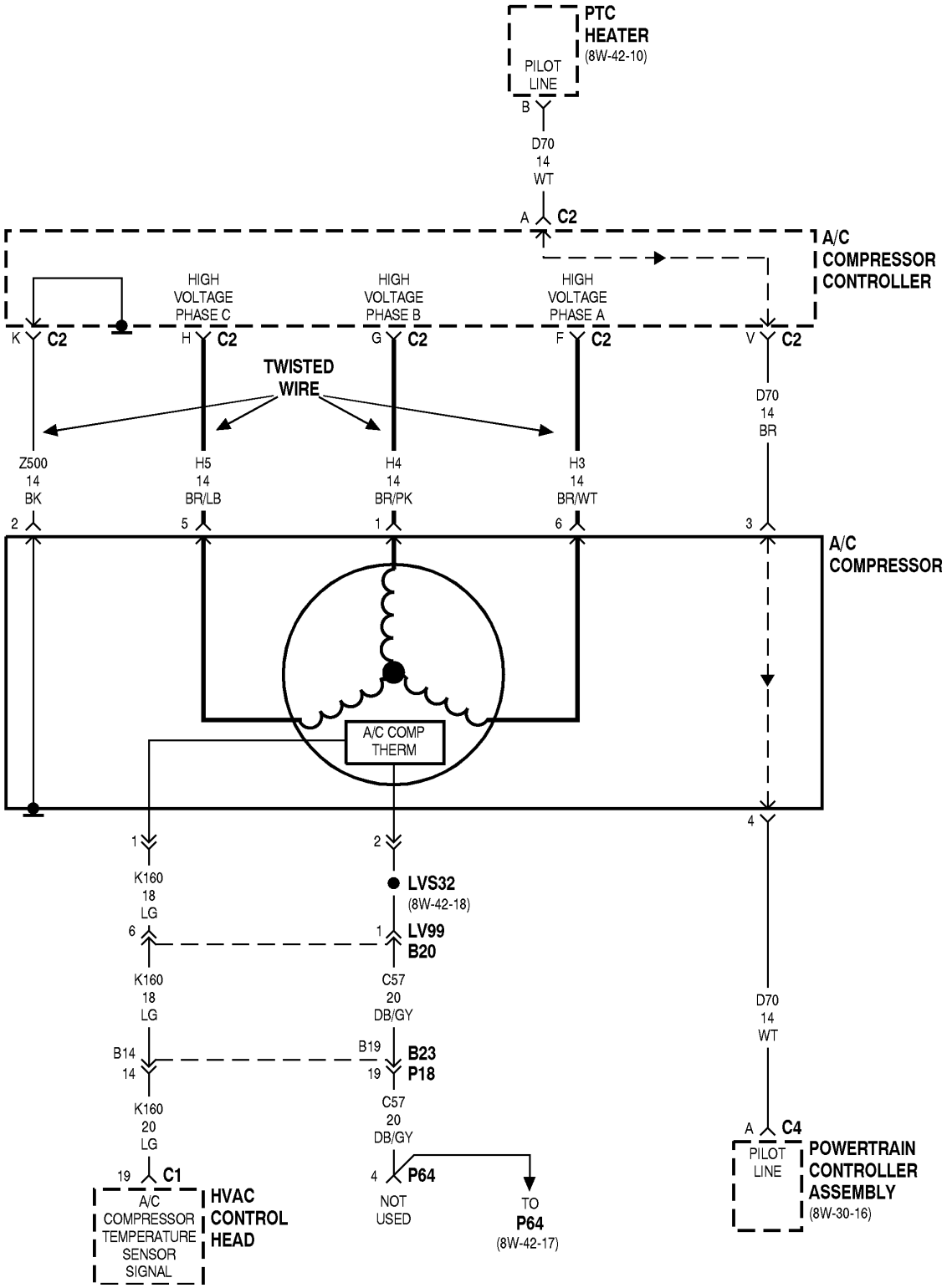
PTC
HEATER
(8W-42-10)
PILOT
LINE
B
D70
14
WT
A
C2
A/C
COMPRESSOR
CONTROLLER
HIGH
VOLTAGE
PHASE C
HIGH
VOLTAGE
PHASE B
HIGH
VOLTAGE
PHASE A
K
C2
H
C2
G
C2
F
C2
V
C2
TWISTED
WIRE
D70
14
BR
Z500
14
BK
H5
14
BR/LB
H4
14
BR/PK
H3
14
BR/WT
2
5
1
6
3
A/C
COMPRESSOR
A/C COMP
THERM
4
1
2
K160
18
LG
LVS32
(8W-42-18)
6
1
LV99
B20
K160
18
LG
C57
20
DB/GY
D70
14
WT
B14
14
B19
19
B23
P18
K160
20
LG
C57
20
DB/GY
A
C4
19
C1
4
P64
PILOT
LINE
POWERTRAIN
CONTROLLER
ASSEMBLY
(8W-30-16)
A/C
COMPRESSOR
TEMPERATURE
SENSOR
SIGNAL
HVAC
CONTROL
HEAD
NOT
USED
TO
P64
(8W-42-17)

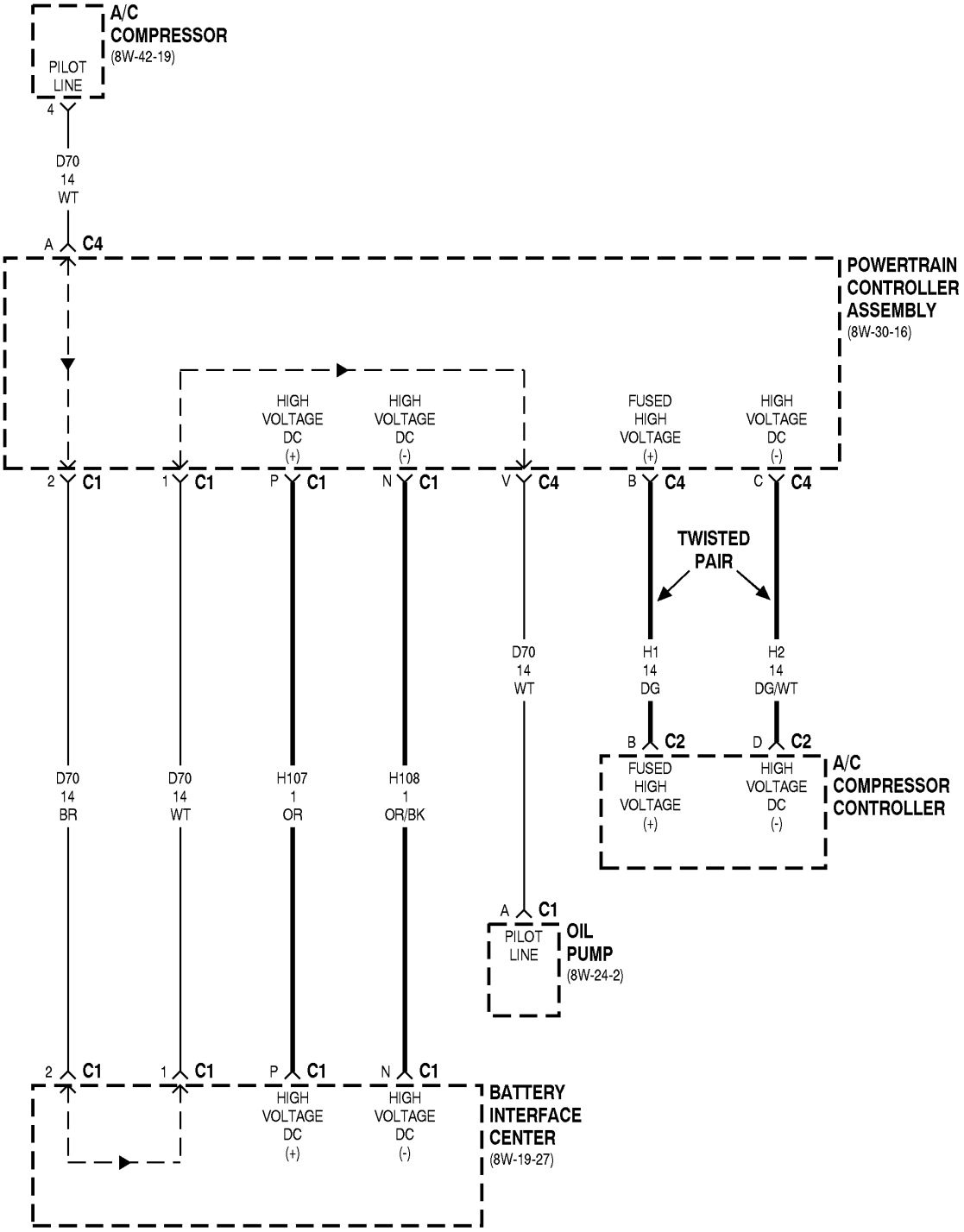
A/C
COMPRESSOR
(8W-42-19)
PILOT
LINE
4
D70
14
WT
A C4
POWERTRAIN
CONTROLLER
ASSEMBLY
(8W-30-16)
HIGH
VOLTAGE
DC
(+)
HIGH
VOLTAGE
DC
(-)
FUSED
HIGH
VOLTAGE
(+)
HIGH
VOLTAGE
DC
(-)
2 C1
1 C1
P C1
N C1
V C4
B C4
C C4
TWISTED
PAIR
D70
14
WT
H1
14
DG
H2
14
DG/WT
B C2
D C2
FUSED
HIGH
VOLTAGE
(+)
HIGH
VOLTAGE
DC
(-)
A/C
COMPRESSOR
CONTROLLER
D70
14
BR
D70
14
WT
H107
1
OR
H108
1
OR/BK
A C1
PILOT
LINE
OIL
PUMP
(8W-24-2)
2 C1
1 C1
P C1
N C1
HIGH
VOLTAGE
DC
(+)
HIGH
VOLTAGE
DC
(-)
BATTERY
INTERFACE
CENTER
(8W-19-27)

INDEX

PAGE

ABS–HYDRAULIC CONTROL UNIT (Integrated) OPERATION . . . . . 5 – 2
ABS LIGHT OPERATION . . . . . 8E – 1
A/C AUXILIARY OUTSIDE COIL SERVICE . . . . 24 – 98
A/C HIGH SIDE PRESSURE TRANSDUCER DIAGNOSIS . . . . . 24 – 7
A/C LOW SIDE PRESSURE TRANSDUCER DIAGNOSIS . . . . . 24 – 7
A/C OUTSIDE COIL SERVICE . . . . . 24 – 99
A/C PERFORMANCE TEST PROCEDURES . . . 24 – 7
A/C PERFORMANCE TEST . . . . . 24 – 8
A/C SERVICE PORT SCHRADER VALVES SERVICE . . . . . 24 – 100
ACCELERATOR PEDAL SERVICE . . . . . 9A – 105
ACTUATOR CALIBRATION . . . . . 24 – 9
ACTUATOR CALIBRATION TEST ENTRY . . . . . 24 – 9
AIRBAG LIGHT OPERATION . . . . . 8E – 2
AIR CONDITIONING REFRIGERANT . . . . . 1 – 3
ALIGNMENT SPECIFICATIONS . . . . . 2 – 7
AUXILIARY POWER CONVERTER (APC) COLD PLATE SERVICE . . . . . 9A – 105
AUXILIARY POWER CONVERTER (APC) FILTER STAGE ASSEMBLY SERVICE . . . . . 9A – 106
AUXILIARY POWER CONVERTER (APC) POWER STAGE ASSEMBLY SERVICE . . . . . 9A – 108
BATTERY COOLING SYSTEM . . . . . 1 – 3
BATTERY INTERFACE CENTER (BIC) SERVICE . . . . . 8A –38
BATTERY MODULE GENERAL INSTALLATION AND REMOVAL PROCESS PRECAUTIONS . . . 8B – 3
BATTERY MODULE SAFE HANDLING PROCEDURES AND PRECAUTIONS . . . . . 8B – 2
BATTERY MODULES SERVICE . . . . . 8B – 3
BATTERY MODULE THERMISTORS SERVICE . . . . . 8B – 6
BATTERY MONITORING MODULES (BMM) SERVICE . . . . . 8B – 8
BATTERY PACK COOLING SYSTEM FILL PROCEDURE . . . . . 7B – 3
BATTERY PACK COOLING SYSTEM PRESSURE TEST PROCEDURE – INSIDE BATTERY TUB . . . . . 7B – 4
BATTERY PACK COOLANT INLET CROSS CAR MANIFOLD ASSEMBLY SERVICE . . . . . 7B – 5
BATTERY PACK COOLANT INLET FORE/AFT MANIFOLD ASSEMBLY SERVICE . . . . . 7B – 6
BATTERY PACK COOLANT OUTLET CROSS CAR MANIFOLD ASSEMBLY SERVICE . . . . . 7B – 7
BATTERY PACK COOLANT OUTLET FORE/AFT MANIFOLD ASSEMBLY SERVICE . . . . . 7B – 9
BEMS LIMP–IN OPERATION . . . . . 8A –3
BI–DIRECTIONAL LINE SERVICE . . . . . 24 – 101
BLEND/AIR CHAMBER THERMISTOR SERVICE . . . . . 24 – 101
BLEND/PASSENGER ACTUATOR BACKGROUND . . . . . 24 – 10
BLOWER MOTOR AND WHEEL ASSEMBLY DIAGNOSIS . . . . . 24 – 10
BRAKE SYSTEM WARNING LIGHT OPERATION . . . . . 8E – 2
CHARGE LEVEL CHECK OR FILL PROCEDURE . . . . . 24 – 96
CHASSIS VECTOR CONTROLLER (CVC) CIRCUIT BOARD SERVICE . . . . . 9A – 109
CHECK PLUG LIGHT OPERATION . . . . . 8E – 2
COMPRESSOR CONTROLLER SERVICE . . . 24 – 103
COMPRESSOR DIAGNOSTIC CHART . . . . . 24 – 89
COMPRESSOR HIGH PRESSURE RELIEF VALVE DESCRIPTION . . . . . 24 – 2
COMPRESSOR NOISE DIAGNOSIS . . . . . 24 – 10
COMPRESSOR SERVICE . . . . . 24 – 102
COMPRESSOR TO HEAT EXCHANGER LINE SERVICE . . . . . 24 – 104
CONDENSATION DRAIN DESCRIPTION . . . . . 24 – 2
COOLDOWN TEST . . . . . 24 – 10
COOLING MODULE DESCRIPTION . . . . . 24 – 2
COOLING MODULE SERVICE . . . . . 7A – 2
COOLANT PUMP SERVICE . . . . . 7B – 11
COOLING SYSTEM REQUIREMENTS . . . . . 24 – 2
CRADLE INLET TUBE SERVICE . . . . . 7B – 12
CRADLE OUTLET TUBE SERVICE . . . . . 7B – 12
CURRENT SENSOR SERVICE . . . . . 9A – 110
DC PILOT STATUS OPERATION . . . . . 8A –1
DIELECTRIC BREAKDOWN SENSOR (DBS) OPERATION . . . . . 8A –2
EEPROM DATA . . . . . 24 – 11
ELECTRIC BACK LIGHT (EBL) DESCRIPTION . . . . . 24 – 2
ELECTRIC WIPER DEICE (EWD) DESCRIPTION . . . . . 24 – 3
ELECTRONIC EXPANSION VALVE (EXV) DIAGNOSTIC CHART . . . . . 24 – 91
ELECTRONIC EXPANSION VALVE (EXV) SERVICE . . . . . 24 – 104
EPIC ACRONYMS . . . . . 1 – 11
EXPANSION VALVE . . . . . 24 – 11
FAN ASSEMBLY MODULE SERVICE . . . . . 7A – 2

INDEX

PAGE

FILTER ASSEMBLY SERVICE . . . . . 9A – 111
FILTER DRYER SERVICE . . . . . 24 – 105
FOUR–WAY REVERSING
VALVE DIAGNOSTIC CHART . . . . . 24 – 92
FOUR WAY VALVE DESCRIPTION . . . . . 24 – 3
GATE DRIVE CIRCUIT BOARD SERVICE . . . 9A – 112
GENERAL ELECTRICAL WARNINGS . . . . . 1 – 6
GENERAL SAFETY PRECAUTIONS . . . . . 1 – 6
HANDLING TUBING AND FITTINGS
DESCRIPTION . . . . . 24 – 3
HEAT EXCHANGER MODULE DESCRIPTION . 24 – 3
HEAT EXCHANGER MODULE SERVICE . . . . 24 – 106
HEAT EXCHANGER TO RECEIVER
DRIER LINE SERVICE . . . . . 24 – 107
HEATER PERFORMANCE TEST . . . . . 24 – 11
HIGH BEAM LIGHT OPERATION . . . . . 8E – 2
HIGH VOLTAGE EMI LINE
FILTERS SERVICE . . . . . 9A – 113
HIGH VOLTAGE FUSE SERVICE . . . . 8B – 8, 9A – 114
HOISTING RECOMMENDATIONS . . . . . 1 – 9
HVAC CONTROL HEAD SERVICE . . . . . 24 – 107
HVAC SYSTEM DIAGNOSTIC TESTS . . . . . 24 – 14
HVAC SYSTEM DIAGNOSTIC CHARTS . . . . . 24 – 89
HVAC SYSTEM SAFETY PRECAUTIONS
AND WARNINGS . . . . . 24 – 6
HVAC UNIT ASSEMBLY SERVICE . . . . . 24 – 108
INSIDE COIL FIN PROBE
(THERMISTOR) SERVICE . . . . . 24 – 110
INSIDE COIL LINE SERVICE . . . . . 24 – 110
INSIDE COIL SERVICE . . . . . 24 – 109
FLOOR DUCT THERMISTOR SERVICE . . . . . 24 – 105
INSTRUMENT CLUSTER CALIBRATION
DIAGNOSIS TABLE . . . . . 8E – 3
INSTRUMENT CLUSTER DESCRIPTION . . . . . 8E – 1
INSTRUMENT CLUSTER DTC
DIAGNOSIS CHART . . . . . 8E – 3
INSULATED GATE BIPOLAR
TRANSISTOR (IGBT) SERVICE . . . . . 9A – 114
INSULATED GATE BIPOLAR TRANSISTOR
(IGBT) COLD PLATE SERVICE . . . . . 9A – 116
INSULATED GATE BIPOLAR TRANSISTOR
(IGBT) SNUBBER CAPACITORS SERVICE . . 9A – 117
L1 INDUCTOR SERVICE . . . . . 9A – 118
LEFT SIDE CROSSMEMBER SERVICE . . . . . 9B – 2
LOW REFRIGERANT LEVEL LEAK
TEST PROCEDURE . . . . . 24 – 96
LOW VOLTAGE POWER SUPPLY/ AUXILIARY
POWER CONVERTER (LVPS/APC)
CIRCUIT BOARD SERVICE . . . . . 9A – 119
MAIN CONTROL MODULE
(MCM) SERVICE . . . . . 8A –38
MAINTENANCE SCHEDULE . . . . . 1 – 3
MASTER CYLINDER OPERATION . . . . . 5 – 1
MASTER CYLINDER PRESSURE
SENSORS OPERATION . . . . . 5 – 2
MASTER CYLINDER PRESSURE
SENSORS SERVICE . . . . . 5 – 7
MESSAGE CENTER DESCRIPTION . . . . . 8E – 1
MODE ACTUATOR BACKGROUND . . . . . 24 – 11
MOTOR OIL . . . . . 1 – 3
NO CHARGE CONDITION DIAGNOSIS . . . . . 9A – 104
NO RESPONSE FROM POWER
STEERING DIAGNOSIS . . . . . 19 – 6
NO START CONDITION DIAGNOSIS . . . . . 9A – 103
OIL COOLER SERVICE . . . . . 7A – 3
OIL COOLING PUMP SERVICE . . . . . 7A – 4
OIL FILL PROCEDURE . . . . . 9B – 1
OIL LEVEL DESCRIPTION . . . . . 24 – 3
OUTER TUB INLET TUBE
ASSEMBLY SERVICE . . . . . 7B – 13
OUTER TUB OUTLET TUBE
ASSEMBLY SERVICE . . . . . 7B – 13
OUTSIDE COIL LINE SERVICE . . . . . 24 – 110
OUTSIDE COIL TO FILTER DRYER
LINE SERVICE . . . . . 24 – 111
OUTSIDE FANS DESCRIPTION . . . . . 24 – 4
PANEL DUCT THERMISTOR SERVICE . . . . . 24 – 111
PARTS AND LUBRICANT
RECOMMENDATIONS . . . . . 1 – 3
PRE–INSIDE COIL THERMISTOR SERVICE . 24 – 113
POSITIVE TEMPERATURE COEFFICIENT
(PTC) HEATER CONTROLLER SERVICE . . . . 24 – 112
POST INSIDE COIL THERMISTOR SERVICE 24 – 114
POWER BRAKE BOOSTER OPERATION . . . . . 5 – 1
POWER DISTRIBUTION BOX
(PDB) SERVICE . . . . . 9A – 120
POWER STEERING FLUID . . . . . 1 – 3
POWER STEERING PRESSURE LINE SERVICE 19 – 9
POWER STEERING PUMP FLOW RATE AND
PRESSURE TEST . . . . . 19 – 8
POSSIBLE LOCATION OR CAUSE
OF INSUFFICIENT HEAT . . . . . 24 – 11
POTENTIOMETER CALIBRATION . . . . . 24 – 12
POWER STEERING PUMP/MOTOR/
CONTROLLER (PMC) SERVICE . . . . . 19 – 10
POWER STEERING RETURN LINE SERVICE 19 – 11
POWER STEERING SYSTEM DIAGNOSTIC
VERIFICATION TEST – VER1A . . . . . 19 – 7

INDEX

PAGE

POWER STEERING SYSTEM NO POWER ASSIST DIAGNOSIS . . . . . 19 – 5
POWER STEERING SYSTEM PRE–DIAGNOSTIC CHECKOUT . . . . . 19 – 4
POWER STEERING SYSTEM SPECIFICATIONS . . . . . 19 – 13
POWERTRAIN CONTROLLER ASSEMBLY (PCA) SERVICE . . . . . 9A – 121
POWERTRAIN CONTROLLER ASSEMBLY (PCA) COOLING FAN SERVICE . . . . . 9A – 123
POWERTRAIN CONTROLLER ASSEMBLY (PCA) MOTHER BOARD SERVICE . . . . . 9A – 124
PRESSURE TRANSDUCERS AND THERMISTORS DESCRIPTION . . . . . 24 – 4
PRE–WHEEL ALIGNMENT INSPECTION . . . . . 2 – 6
PROPORTIONING VALVE OPERATION . . . . . 5 – 2
PTC HEATER CORE DIAGNOSTIC CHART . . . 24 – 93
PTC HEATER CORE SERVICE . . . . . 24 – 114
R–134A REFRIGERANT DESCRIPTION . . . . . 24 – 4
RECIRC ACTUATOR BACKGROUND . . . . . 24 – 12
RECOMMENDED TOWING EQUIPMENT . . . . . 1 – 4
REFRIGERANT OIL LEVEL CHECK PROCEDURE . . . . . 24 – 97
REFRIGERANT SYSTEM EVACUATION PROCEDURE . . . . . 24 – 97
REGENERATIVE BRAKING OPERATION . . . . . 5 – 2
RELAY DRIVE ASSEMBLY SERVICE . . . . . 9A – 126
RESOLVER SERVICE . . . . . 9B – 4
RETURN OF BATTERIES . . . . . 1 – 4
RIGHT SIDE CROSSMEMBER SERVICE . . . . . 9B – 6
RIGHT SIDE MOTOR MOUNT SERVICE . . . . . 9B – 7
ROAD TESTING A COMPLAINT VEHICLE . . . . . 1 – 9
SAFETY PRECAUTIONS FOR WELDING ON THE EPIC . . . . . 1 – 8
SAFETY RELAY OPERATION . . . . . 8A –2
SERVICE DISCONNECT SWITCH SERVICE . . . 8B – 9
SERVICE REQUIRED LIGHT OPERATION . . . . . 8E – 2
SERVICING REFRIGERANT OIL LEVEL PROCEDURE . . . . . 24 – 97
SERVICING SUB–ASSEMBLIES . . . . . 1 – 8
SHUT–OFF VALVE DIAGNOSTIC CHART . . . . 24 – 95
SIDE DOOR A/C HEAT OUTLETS DESCRIPTION . . . . . 24 – 4
SIDE WINDOW DEMISTOR DESCRIPTION . . . . 24 – 5

PAGE

SOLID STATE BLOWER RELAY SERVICE . . . 24 – 114
SPECIFIC SAFETY WARNINGS AND CAUTIONS . . . . . 1 – 7
SPEED REDUCER DESCRIPTION . . . . . 21 – 1
SPEED REDUCER OPERATION . . . . . 21 – 1
SPEED REDUCER SERVICE . . . . . 21 – 1
SPEED SENSORS OPERATION . . . . . 5 – 3
STATE OF CHARGE (SOC) OPERATION . . . . . 8A –2
STICKING HVAC CONTROL HEAD PUSH BUTTONS . . . . . 24 – 98
SYSTEM AIRFLOW OPERATION . . . . . 24 – 5
SYSTEM LEAK CHECKING PROCEDURE . . . . 24 – 98
TEMPERATURE CONTROL DIAGNOSIS . . . . . 24 – 12
TONE WHEELS OPERATION . . . . . 5 – 3
TRACTION BATTERY COOLING FAN ASSEMBLY SERVICE . . . . . 8B – 13
TRACTION BATTERY TEMPERATURE LIGHT OPERATION . . . . . 8E – 2
TRACTION BATTERY TUB SERVICE . . . . . 8B – 11
TRACTION MOTOR SERVICE . . . . . 9B – 8
TRACTION MOTOR TEMPERATURE SENSOR SERVICE . . . . . 9B – 13
TRANSAXLE FLUID . . . . . 1 – 3
TURN SIGNAL INDICATORS OPERATION . . . . . 8E – 2
VACUUM PUMP/MOTOR ASSEMBLY OPERATION . . . . . 5 – 1
VACUUM PUMP/MOTOR RELAY MODULE OPERATION . . . . . 5 – 2
VACUUM PUMP/MOTOR ASSEMBLY SERVICE . . . . . 5 – 7
VACUUM PUMP/MOTOR RELAY MODULE SERVICE . . . . . 5 – 8
VEHICLE MAINTENANCE PRECAUTIONS . . . . . 1 – 9
VACUUM PUMP WILL NOT RUN DIAGNOSIS . . . . . 5 – 4
VACUUM PUMP RUNS CONTINUOUSLY DIAGNOSIS . . . . . 5 – 6
VEHICLE FEATURES . . . . . 1 – 10
VEHICLE SHUT DOWN FLOW CHART . . . . . 9A – 4
VEHICLE START UP FLOW CHART . . . . . 9A – 3
VOLTAGE CURRENT MEASUREMENT MODULE OPERATION . . . . . 8A –2
WAIT LIGHT OPERATION . . . . . 8E – 2

THIS PAGE INTENTIONALLY LEFT BLANK