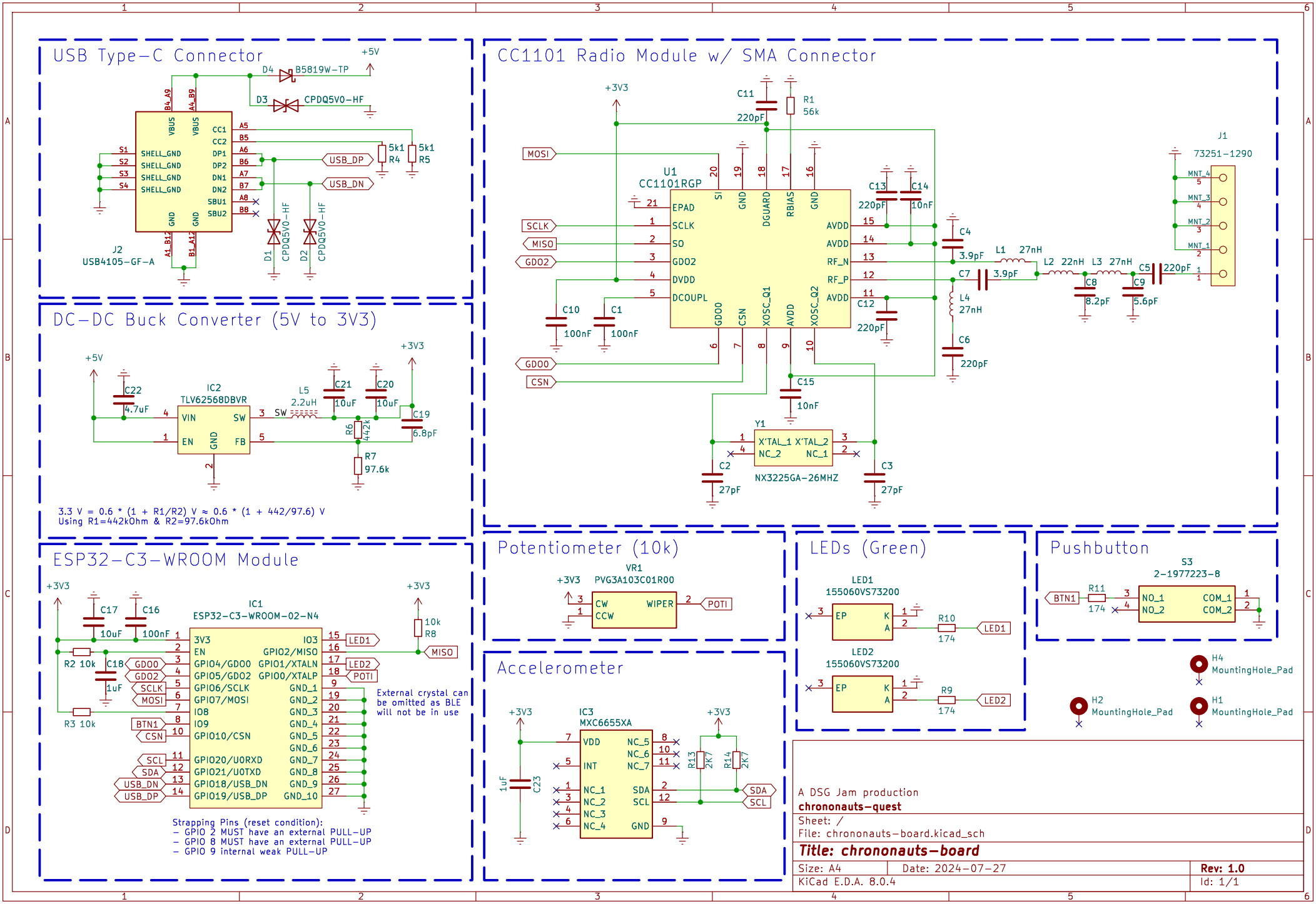
USB Type-C Connector
+5V
D4 B5819W-TP
D3 CPDQ5V0-HF
J2
USB4105-GF-A
VBUS
CC1
CC2
DP1
DP2
DN1
DN2
SBU1
SBU2
SHELL_GND
GND
B4_A9
A4_B9
A1_B12
B1_A12
S1
S2
S3
S4
A5
B5
A6
B6
A7
B7
A8
B8
USB_DP
USB_DN
5k1 R4
5k1 R5
D1 CPDQ5V0-HF
D2 CPDQ5V0-HF
CC1101 Radio Module w/ SMA Connector
+3V3
C11 220pF
R1 56k
U1
CC1101RGP
MOSI
SCLK
MISO
GDO2
GDO0
CSN
EPAD
SCLK
SO
GDO2
DVDD
DCOUPL
SI
GND
DGUARD
RBIAS
AVDD
RF_N
RF_P
XOSC_Q1
XOSC_Q2
C13 220pF
C14 10nF
C4 3.9pF
C7 3.9pF
L1 27nH
L2 22nH
L3 27nH
C5 220pF
C8 8.2pF
C9 5.6pF
L4 27nH
C6 220pF
C12 220pF
C10 100nF
C1 100nF
C15 10nF
Y1
X'TAL_1
X'TAL_2
NC_2
NC_1
NX3225GA-26MHZ
C2 27pF
C3 27pF
J1
73251-1290
MNT_4
MNT_3
MNT_2
MNT_1
DC-DC Buck Converter (5V to 3V3)
+5V
+3V3
C22 4.7uF
IC2
TLV62568DBVR
VIN
SW
EN
GND
FB
L5 2.2uH
C21 10uF
C20 10uF
C19 6.8pF
R6 442k
R7 97.6k
3.3 V = 0.6 * (1 + R1/R2) V ≈ 0.6 * (1 + 442/97.6) V
Using R1=442kOhm & R2=97.6kOhm
ESP32-C3-WROOM Module
+3V3
C17 10uF
C16 100nF
IC1
ESP32-C3-WROOM-02-N4
3V3
EN
GPIO4/GDO0
GPIO5/GDO2
GPIO6/SCLK
GPIO7/MOSI
IO8
IO9
GPIO10/CSN
GPIO20/U0RXD
GPIO21/U0TXD
GPIO18/USB_DN
GPIO19/USB_DP
IO3
GPIO2/MISO
GPIO1/XTALN
GPIO0/XTALP
GND_1
GND_2
GND_3
GND_4
GND_5
GND_6
GND_7
GND_8
GND_9
GND_10
R2 10k
C18 1uF
R3 10k
BTN1
CSN
SCL
SDA
USB_DN
USB_DP
LED1
LED2
POTI
MISO
10k R8
External crystal can be omitted as BLE will not be in use
Strapping Pins (reset condition):
- GPIO 2 MUST have an external PULL-UP
- GPIO 8 MUST have an external PULL-UP
- GPIO 9 internal weak PULL-UP
Potentiometer (10k)
VR1
PVG3A103C01R00
CW
CCW
WIPER
Accelerometer
IC3
MXC6655XA
VDD
INT
NC_1
NC_2
NC_3
NC_4
NC_5
NC_6
NC_7
SDA
SCL
GND
C23 1uF
R13 2k7
R14 2k7
LEDs (Green)
LED1
155060VS73200
LED2
155060VS73200
EP
K
A
R10 174
R9 174
Pushbutton
S3
2-1977223-8
BTN1
R11 174
NO_1
NO_2
COM_1
COM_2
H4 MountingHole_Pad
H2 MountingHole_Pad
H1 MountingHole_Pad
A DSG Jam production
chrononauts-quest
Sheet: /
File: chrononauts-board.kicad_sch
Title: chrononauts-board
Size: A4
Date: 2024-07-27
Rev: 1.0
KiCad E.D.A. 8.0.4
Id: 1/1