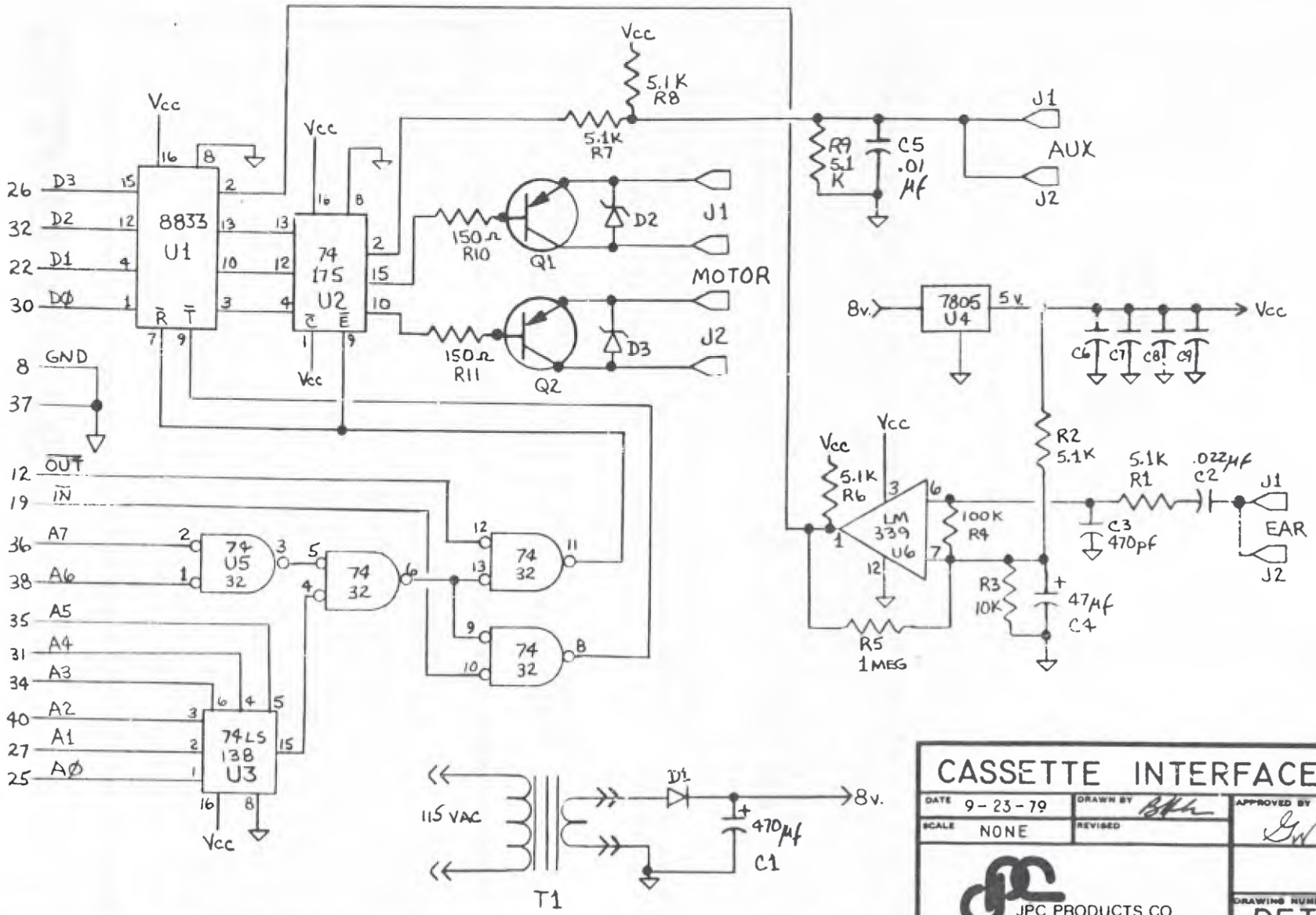
Vcc
5.1K
R8
5.1K
R7
J1
AUX
J2
R9
5.1
K
C5
.01
μf
8833
U1
74
175
U2
D3
D2
D1
DØ
GND
OUT
IN
A7
A6
A5
A4
A3
A2
A1
AØ
74
U5
32
74
32
74LS
138
U3
150Ω
R10
Q1
D2
J1
MOTOR
150Ω
R11
Q2
D3
J2
8v.
7805
U4
5v.
C6
C7
C8
C9
R2
5.1K
5.1K
R6
LM
339
U6
100K
R4
R3
10K
47μf
C4
R5
1MEG
5.1K
R1
.022μf
C2
C3
470pf
J1
EAR
J2
115 VAC
D1
470μf
C1
T1
8v.
CASSETTE INTERFACE
DATE 9-23-79
DRAWN BY
APPROVED BY
SCALE NONE
REVISED
JPC PRODUCTS CO
DRAWING NUMBER
DETC-8