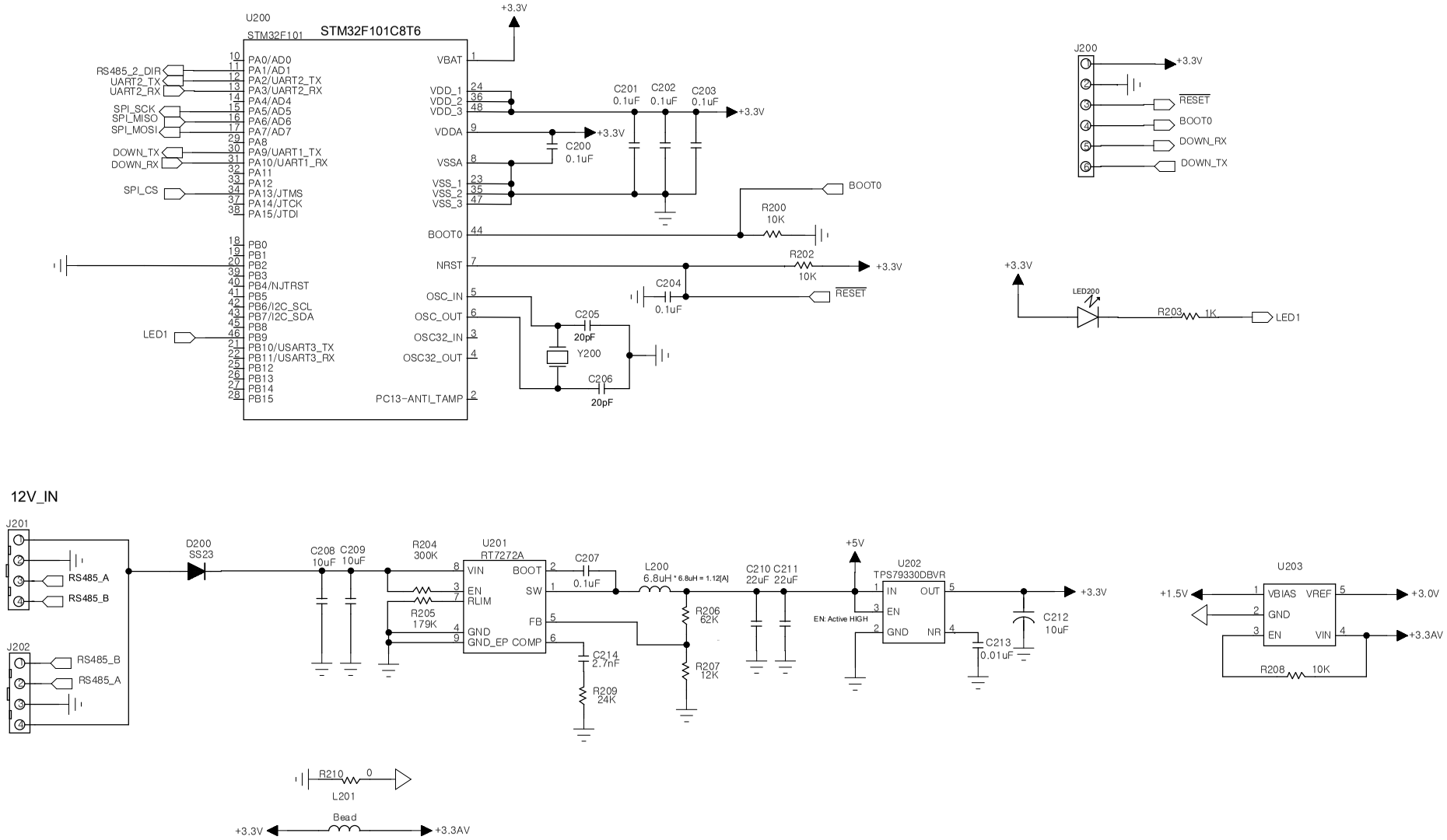

DRAWN:	DATED:	COMPANY: SEG	REV: A1.0
UPDATE :	DATED:	TITLE: Analog Sensor Module	SHEET: 1 OF 2

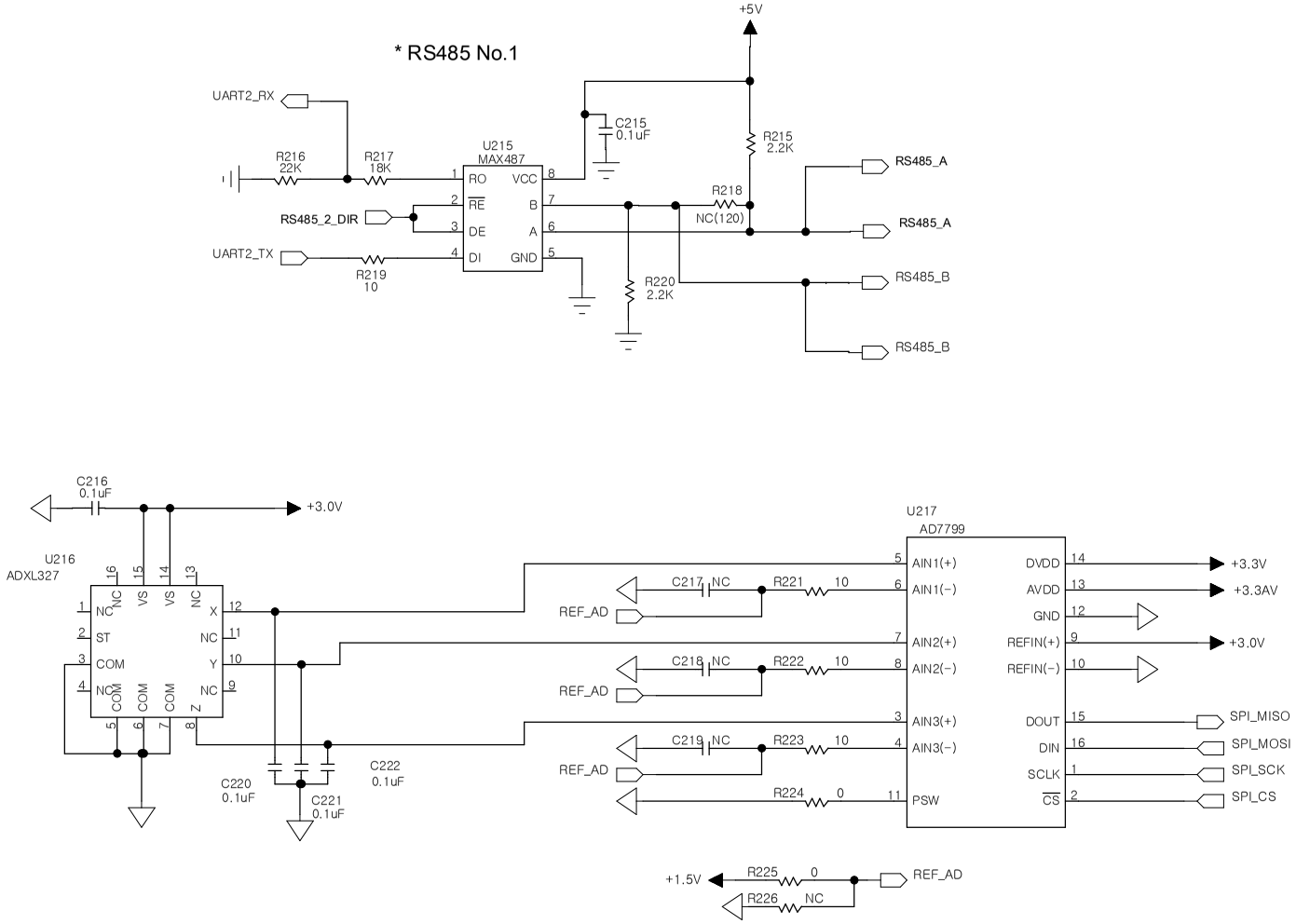

DRAWN:	DATED:	COMPANY: SEG	REV: 2.0
UPDATE:	DATED:	TITLE: Analog Sensor Module	SHEET: 2 OF 2