KHOI MCU

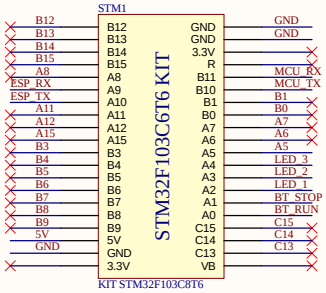

KHOI NGUON

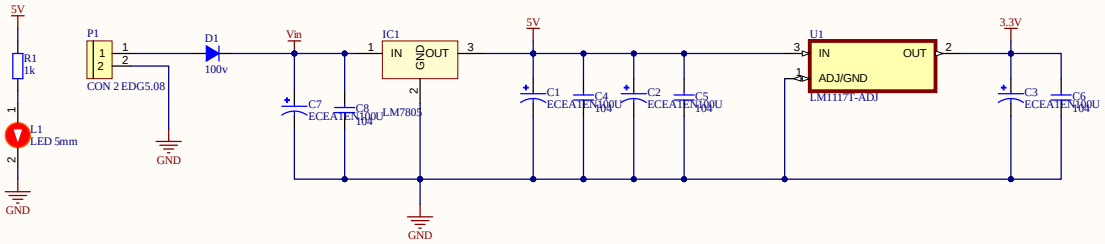

KHOI ESP

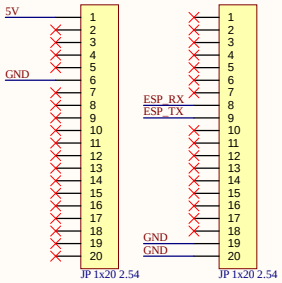

KHOI LED - BUTTON

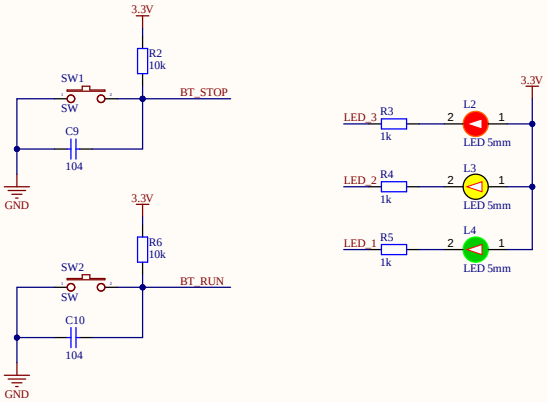

KHOI SENSOR

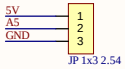
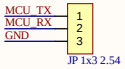
KHOI PL2303