drawing no. 20010

projection

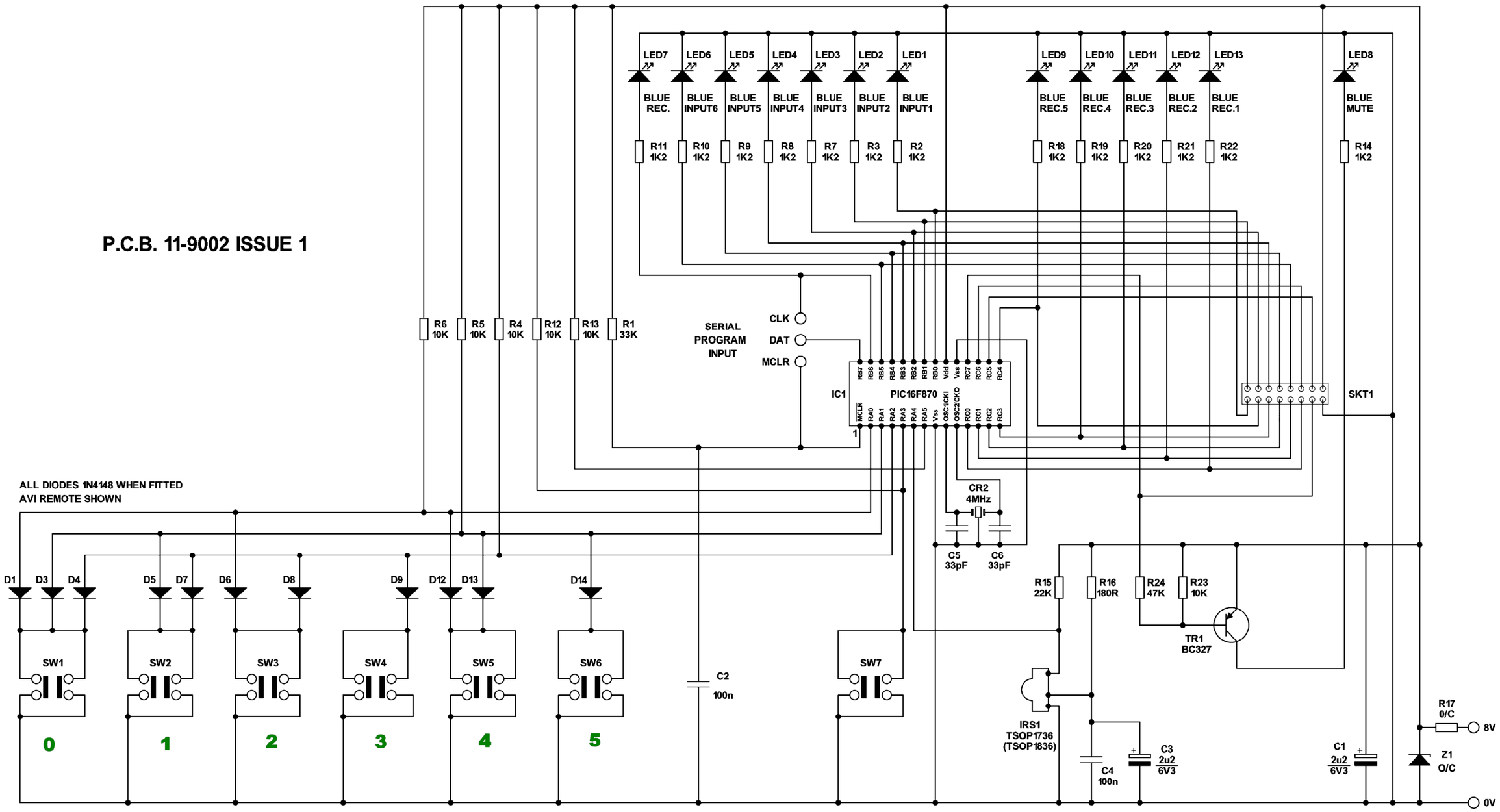

ENCODING THAT THE PIC SEES
IN THE LOW 3-BITS OF PORTA

issue code-provisional ABC etc/product on 123 etc																			

© A.V.INTERNATIONAL

product	sheet	issue	drawn	checked	approved	scale	date
S21 MI	1 of 1		D.J.A.	T.J.B.	A.J.	A3 1:1	02/11/2002

title CONTROL PROCESSOR

drawing no. 20010