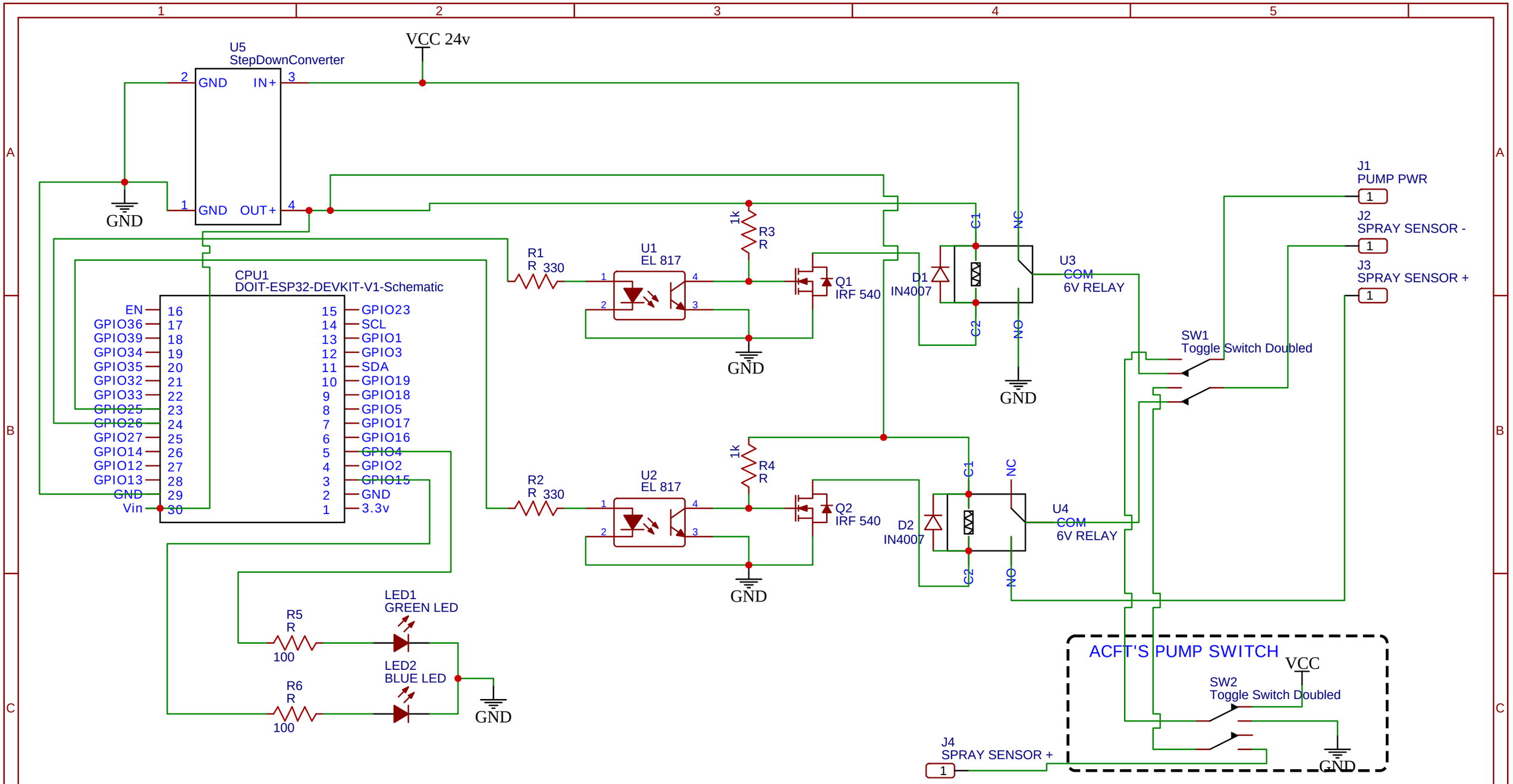

TITLE: AutoBoom Bluetooth controlled		REV: 1.1
EasyEDA	Company: Pardal	Sheet: 1/1
	Date: 2022-02-28 Drawn By: Pedro Martins	