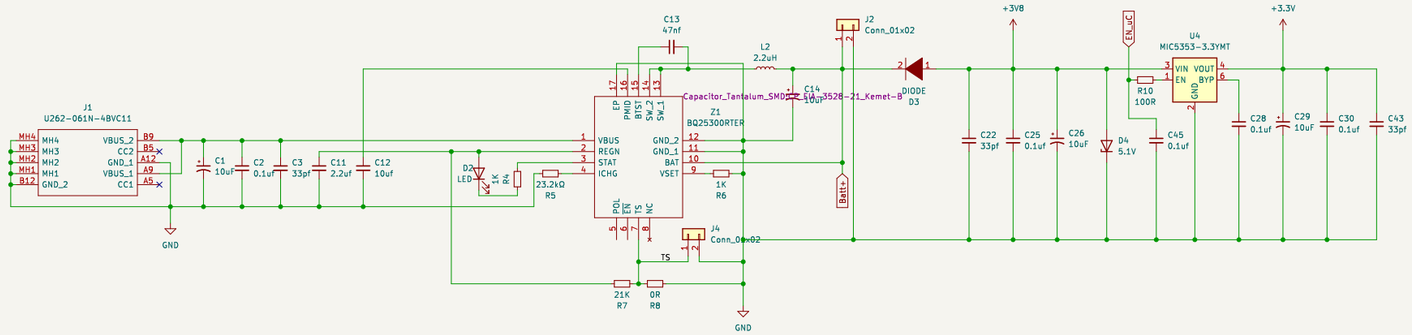
J1
U262-061N-4BVC11
C1 10uf
C2 0.1uf
C3 33pf
C11 2.2uf
C12 10uf
C13 47nf
L2 2.2uH
Capacitor_Tantalum_SMD7343-31
C14 10uf
Z1
BQ25300RTER
D2 LED
R5 23.2kΩ
R6 1K
J4 Conn_01x02
R7 21K
R8 0R
J2 Conn_01x02
DIODE 3528-21_Kemet-B
D3
Batt+
+3V8
C22 33pf
C25 0.1uf
C26 10uf
D4 5.1V
EN_uC
R10 100R
U4
MIC5353-3.3YMT
C45 0.1uf
+3.3V
C28 0.1uf
C29 10uf
C30 0.1uf
C43 33pf
GND

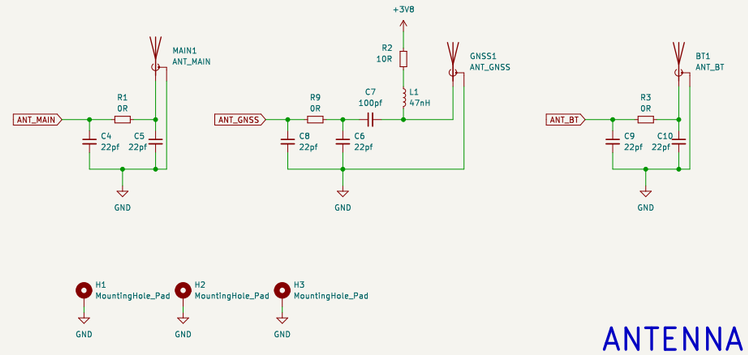
MAIN1
ANT_MAIN
R1 0R
C4 22pf
C5 22pf
ANT_MAIN
+3V8
R2 10R
GNSS1
ANT_GNSS
R9 0R
C7 100pf
L1 47nH
C8 22pf
C6 22pf
ANT_GNSS
BT1
ANT_BT
R3 0R
C9 22pf
C10 22pf
ANT_BT
H1 MountingHole_Pad
H2 MountingHole_Pad
H3 MountingHole_Pad
GND

ANTENNA

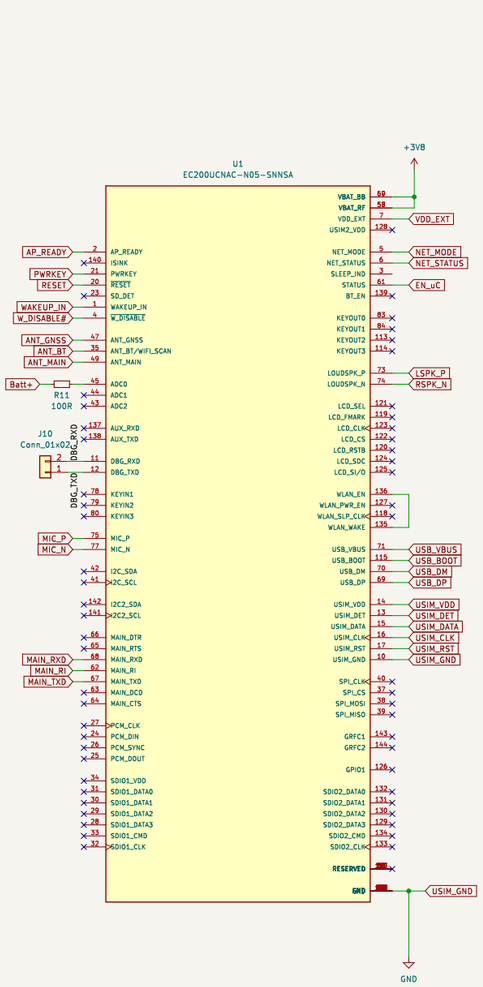
U1
EC200UCNAC-N05-SNNSA
+3V8
AP_READY
PWRKEY
RESET
WAKEUP_IN
W_DISABLE#
ANT_GNSS
ANT_BT
ANT_MAIN
Batt+
R11 100R
J10
Conn_01x02
DBG_RXD
DBG_TXD
MIC_P
MIC_N
MAIN_RXD
MAIN_RI
MAIN_TXD
VDD_EXT
NET_MODE
NET_STATUS
EN_uC
LSPK_P
RSPK_N
USB_VBUS
USB_BOOT
USB_DM
USB_DP
USIM_VDD
USIM_DET
USIM_DATA
USIM_CLK
USIM_RST
USIM_GND
GND

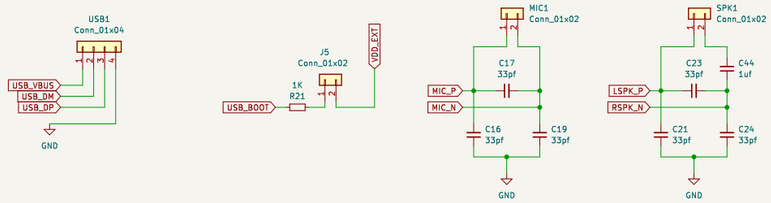
USB1
Conn_01x04
USB_VBUS
USB_DM
USB_DP
GND
J5
Conn_01x02
VDD_EXT
1K R21
USB_BOOT
MIC1
Conn_01x02
C17 33pf
MIC_P
MIC_N
C16 33pf
C19 33pf
SPK1
Conn_01x02
C23 33pf
C44 1uf
LSPK_P
RSPK_N
C21 33pf
C24 33pf

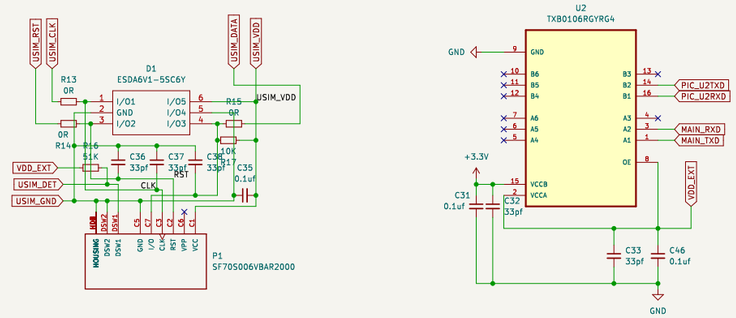
USIM_RST
USIM_CLK
R13 0R
R14 0R
D1
ESDA6V1-5SC6Y
USIM_DATA
USIM_VDD
R15 0R
R16 51K
C36 33pf
C37 33pf
C38 33pf
10K R17
C35 0.1uf
VDD_EXT
USIM_DET
USIM_GND
P1
SF70SO06VBAR2000
U2
TXB0106RGYRG4
PIC_U2TXD
PIC_U2RXD
MAIN_RXD
MAIN_TXD
C31 0.1uf
C32 33pf
C33 33pf
C46 0.1uf
GND

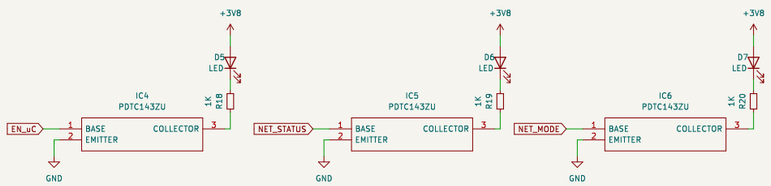
+3V8
D5 LED
IC4
PDTC143ZU
1K R18
EN_uC
D6 LED
IC5
PDTC143ZU
1K R19
NET_STATUS
D7 LED
IC6
PDTC143ZU
1K R20
NET_MODE
BASE
EMITTER
COLLECTOR
GND

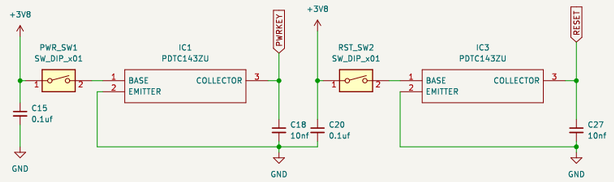
+3V8
PWR_SW1
SW_DIP_x01
C15 0.1uf
IC1
PDTC143ZU
PWRKEY
C18 10nf
C20 0.1uf
RST_SW2
SW_DIP_x01
IC3
PDTC143ZU
RESET
C27 10nf
BASE
EMITTER
COLLECTOR
GND

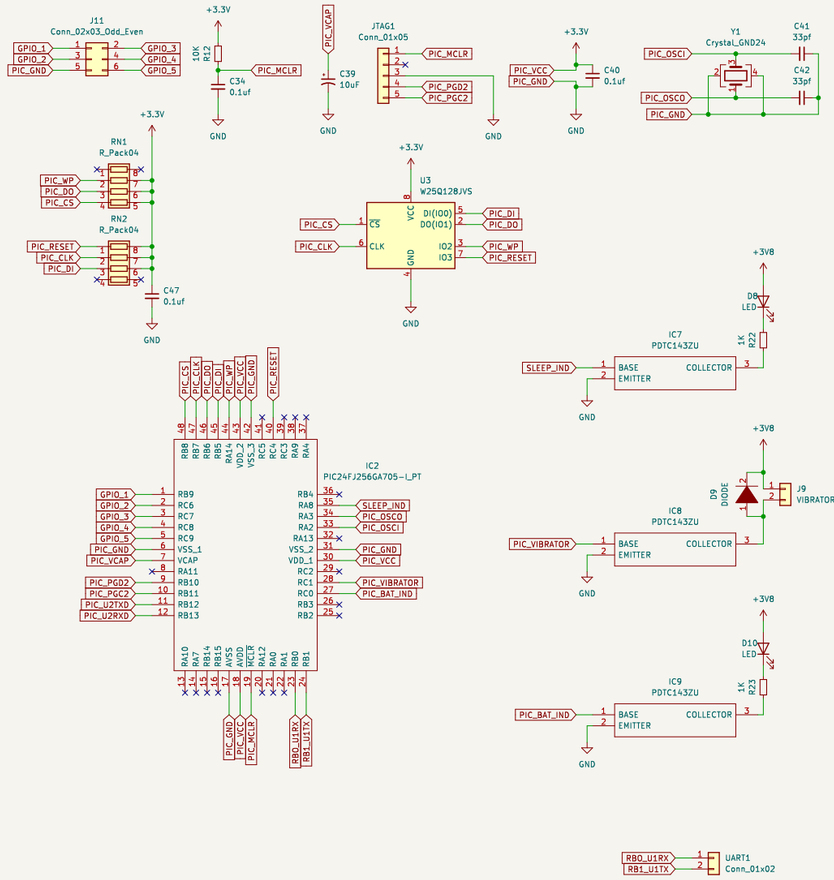
J11
Conn_02x03_Odd_Even
GPIO_1
GPIO_2
PIC_GND
GPIO_3
GPIO_4
GPIO_5
+3.3V
10K R12
PIC_MCLR
C34 0.1uf
PIC_VCAP
C39 10uf
JTAG1
Conn_01x05
PIC_MCLR
PIC_PGD2
PIC_PGC2
PIC_VCC
C40 0.1uf
Y1
Crystal_GND24
PIC_OSCI
PIC_OSCO
C41 33pf
C42 33pf
RN1
R_Pack04
PIC_WP
PIC_DO
PIC_CS
RN2
R_Pack04
PIC_RESET
PIC_CLK
PIC_DI
C47 0.1uf
U3
W25Q128JVS
DI(IO0)
DO(IO1)
IO2
IO3
IC2
PIC24FJ256GA705-I_PT
RB9
RC6
RC7
RC8
RC9
VSS_1
VCAP
RA11
RB10
RB11
RB12
RB13
RB4
RA8
RA3
RA2
RA13
VSS_2
VDD_1
RC2
RC1
RC0
RB3
RB2
SLEEP_IND
PIC_OSCO
PIC_OSCI
PIC_VCC
PIC_VIBRATOR
PIC_BAT_IND
RB0_U1RX
RB1_U1TX
IC7
PDTC143ZU
D8 LED
1K R22
IC8
PDTC143ZU
D9 DIODE
J9 VIBRATOR
IC9
PDTC143ZU
D10 LED
1K R23
BASE
EMITTER
COLLECTOR
GND
UART1
Conn_01x02