Pipelined Processor

MODULE 2

Microarchitecture

Pipelined Processor - Pipelined Data Path,
Pipelined Control: Hazards, Solving Data/Control Hazards,
Performance Analysis.

Pipelined RISC-V Processor

- **Temporal parallelism**
- Divide single-cycle processor into **5 stages**:
  - Fetch
  - Decode
  - Execute
  - Memory
  - Writeback
- Add **pipeline registers** between stages

Single-Cycle vs. Pipelined Processor

Single-Cycle

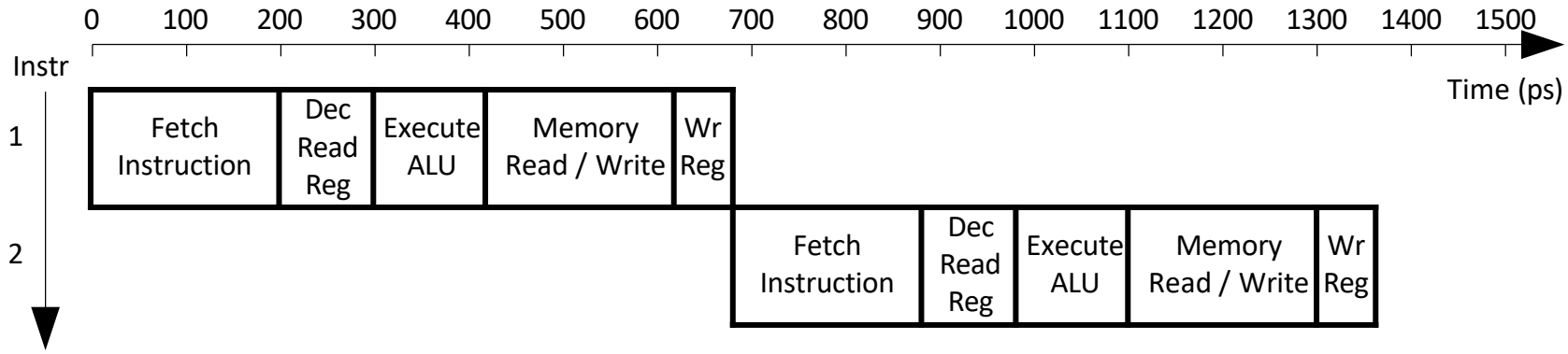

Pipelined

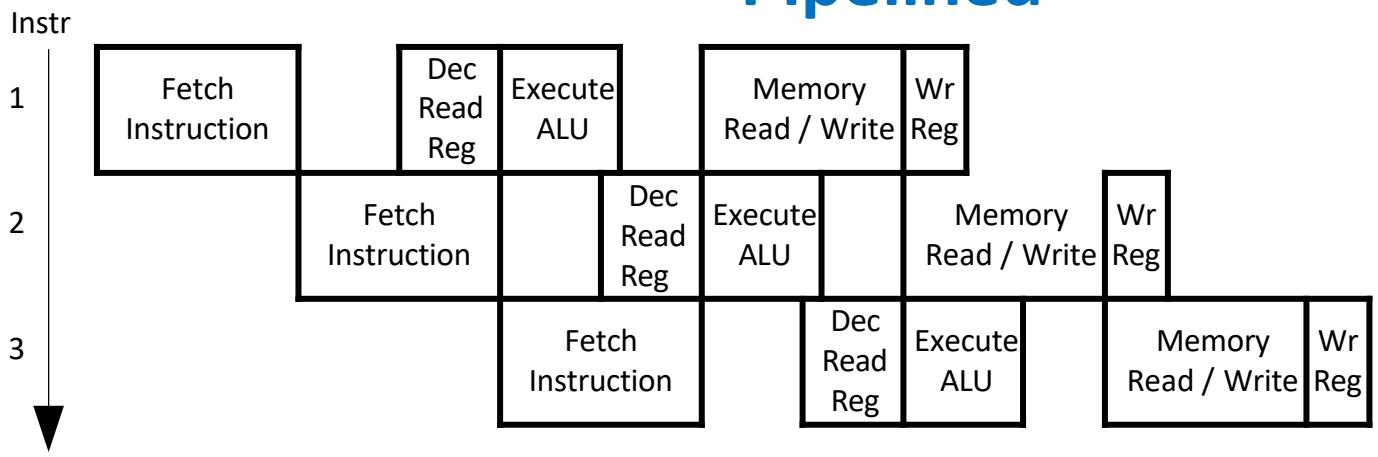

Pipelined Processor Abstraction

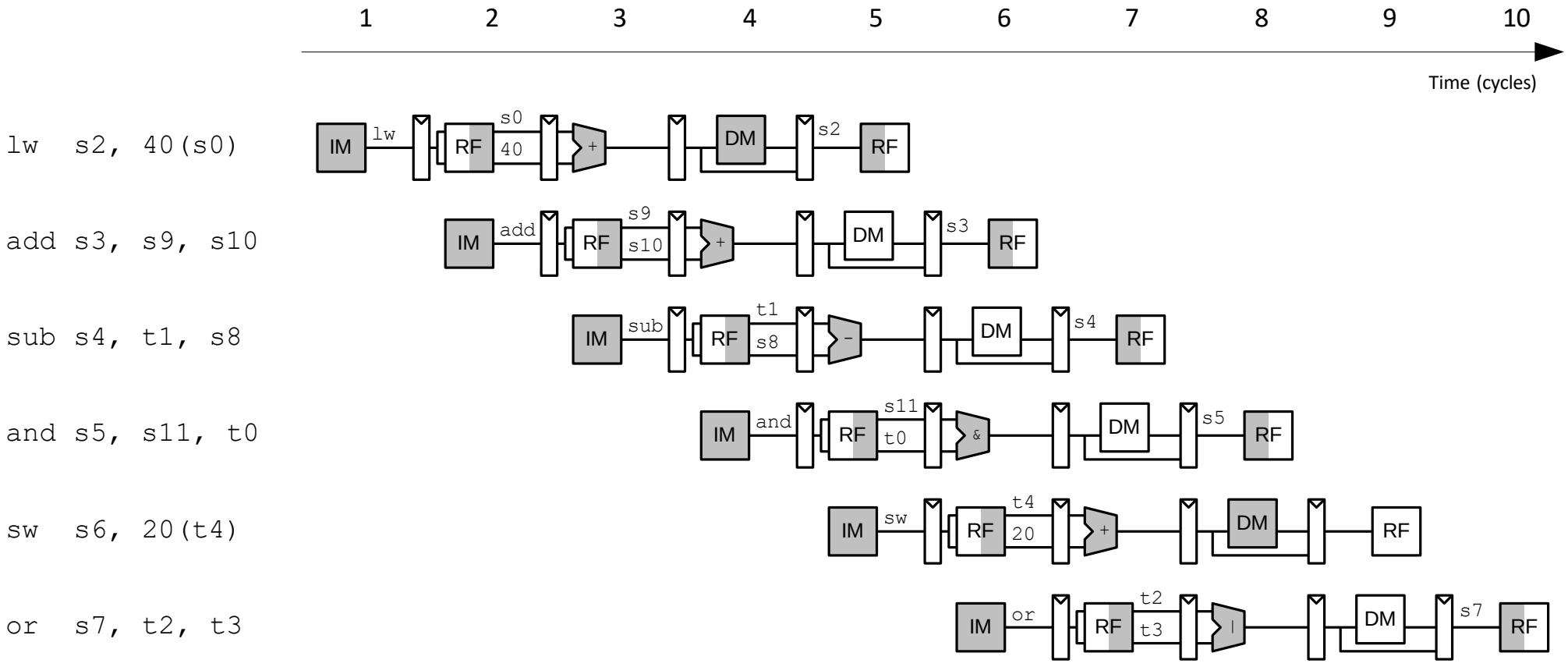

Single-Cycle & Pipelined Datapaths

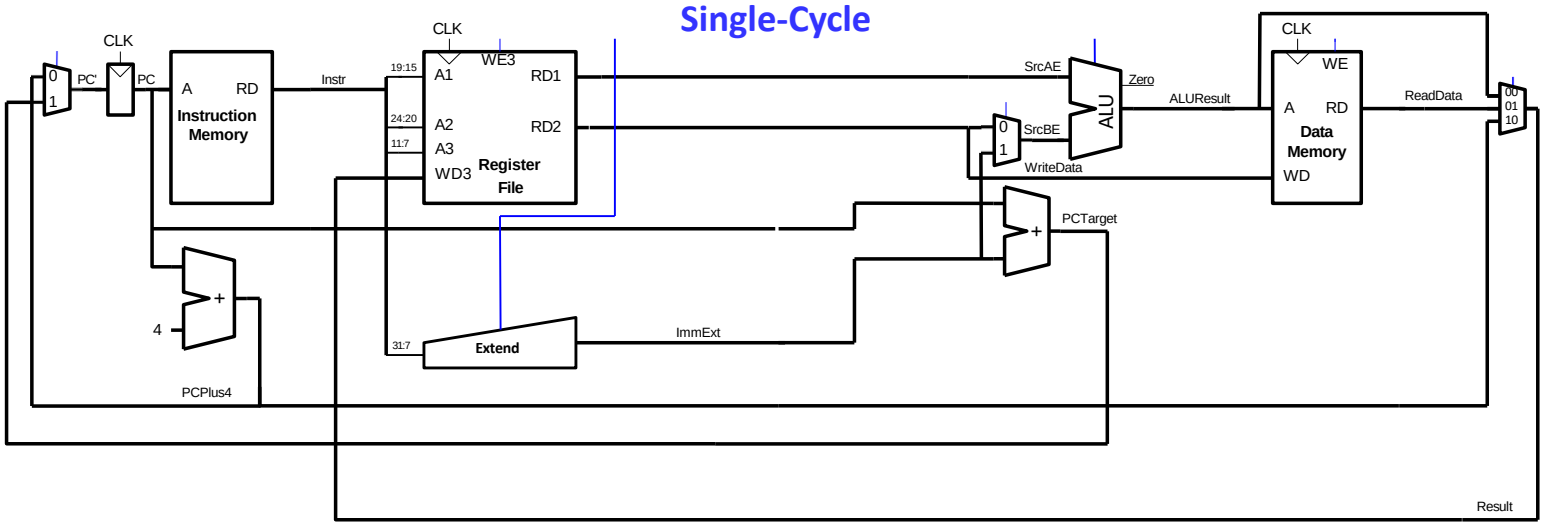

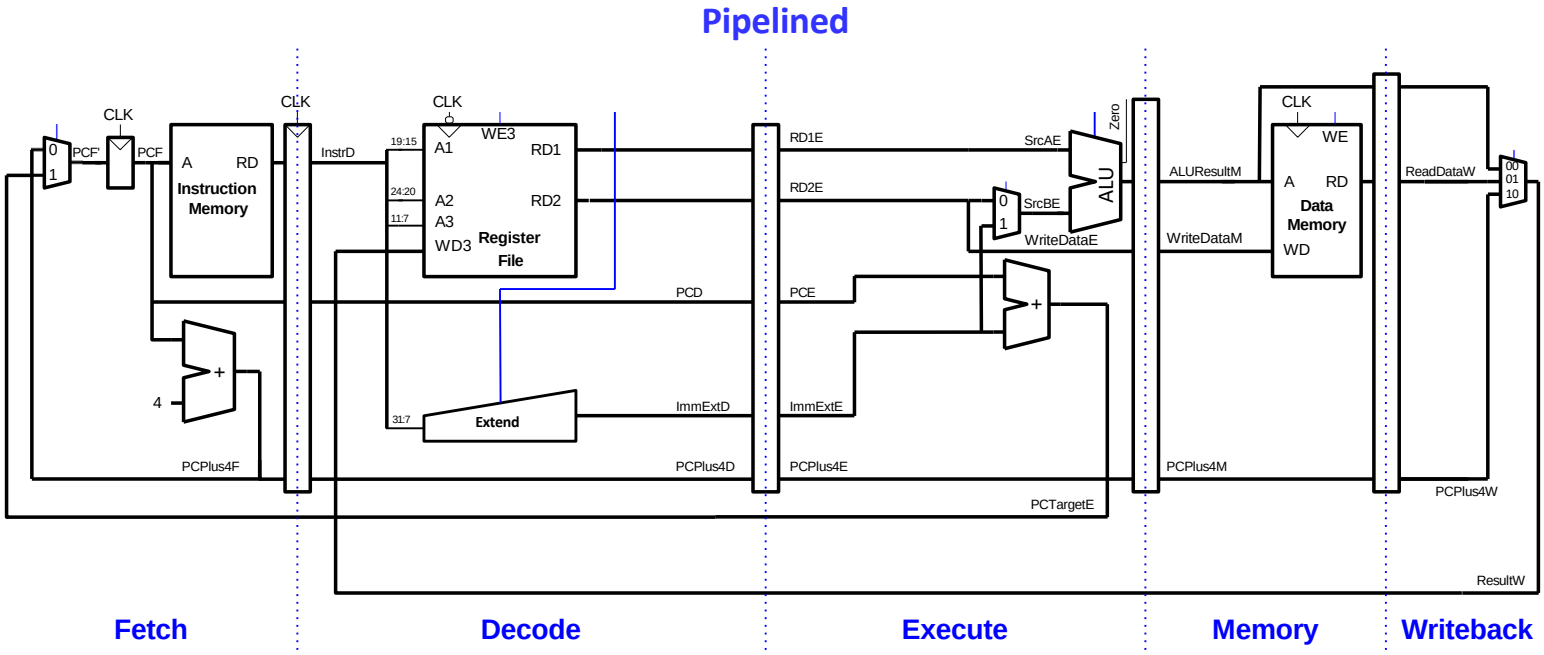

Signals in Pipelined Processor are appended with first letter of stage (i.e., PC**F**, PC**D**, PC**E**).

Corrected Pipelined Datapath

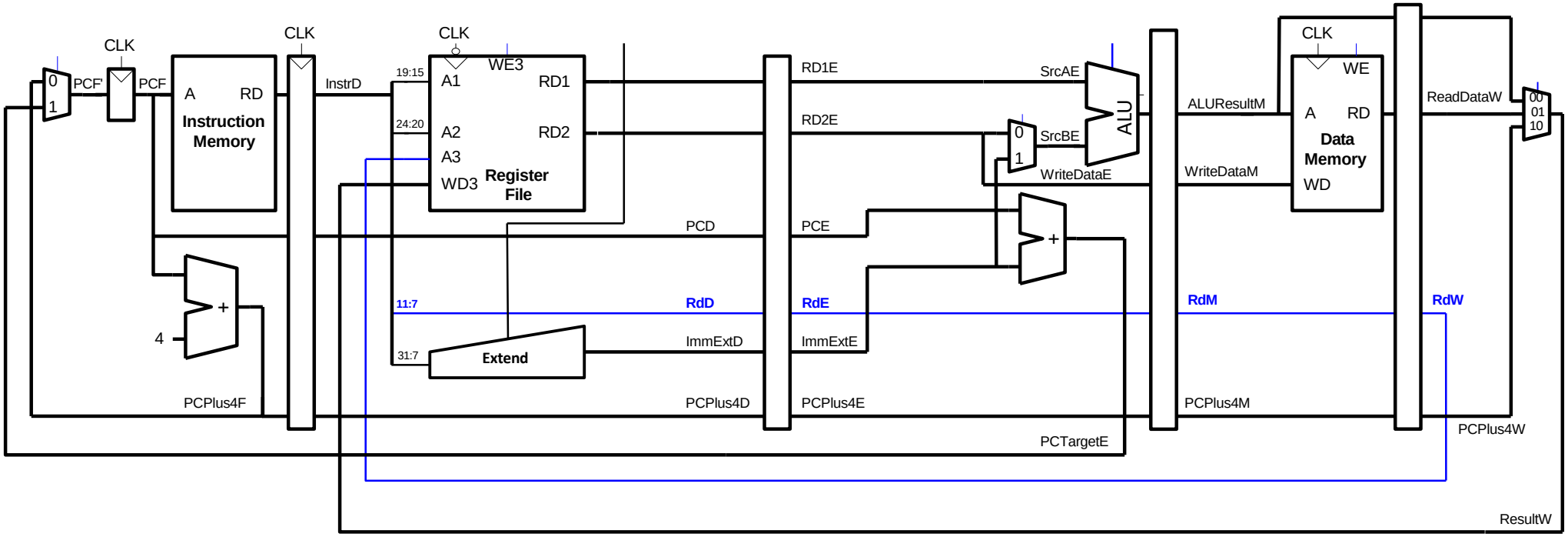

- ***Rd*** must arrive at same time as ***Result***
- Register file written on **falling edge** of *CLK*

Pipelined Processor with Control

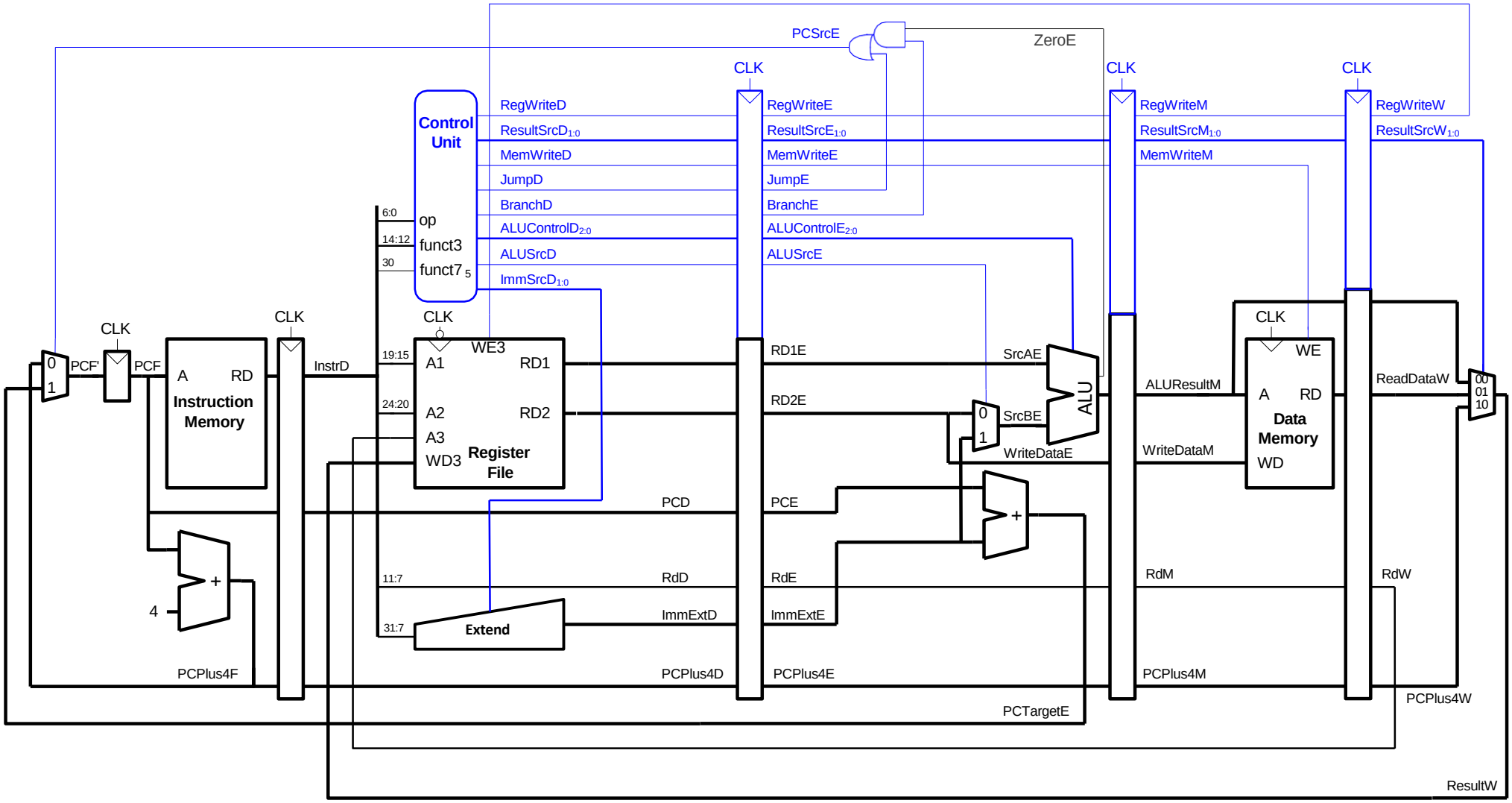

- **Same control unit** as single-cycle processor
- **Control signals travel with** the instruction (drop off when used)

Chapter 7: Microarchitecture

Pipelined Processor Hazards

Pipelined Hazards

- When an instruction depends on result from instruction that hasn't completed
- Types:
  - **Data hazard:** register value not yet written back to register file
  - **Control hazard:** next instruction not decided yet (caused by branch)

Data Hazard

```
add s8, s4, s5
sub s2, s8, s3
or  s9, t6, s8
and s7, s8, t2
```

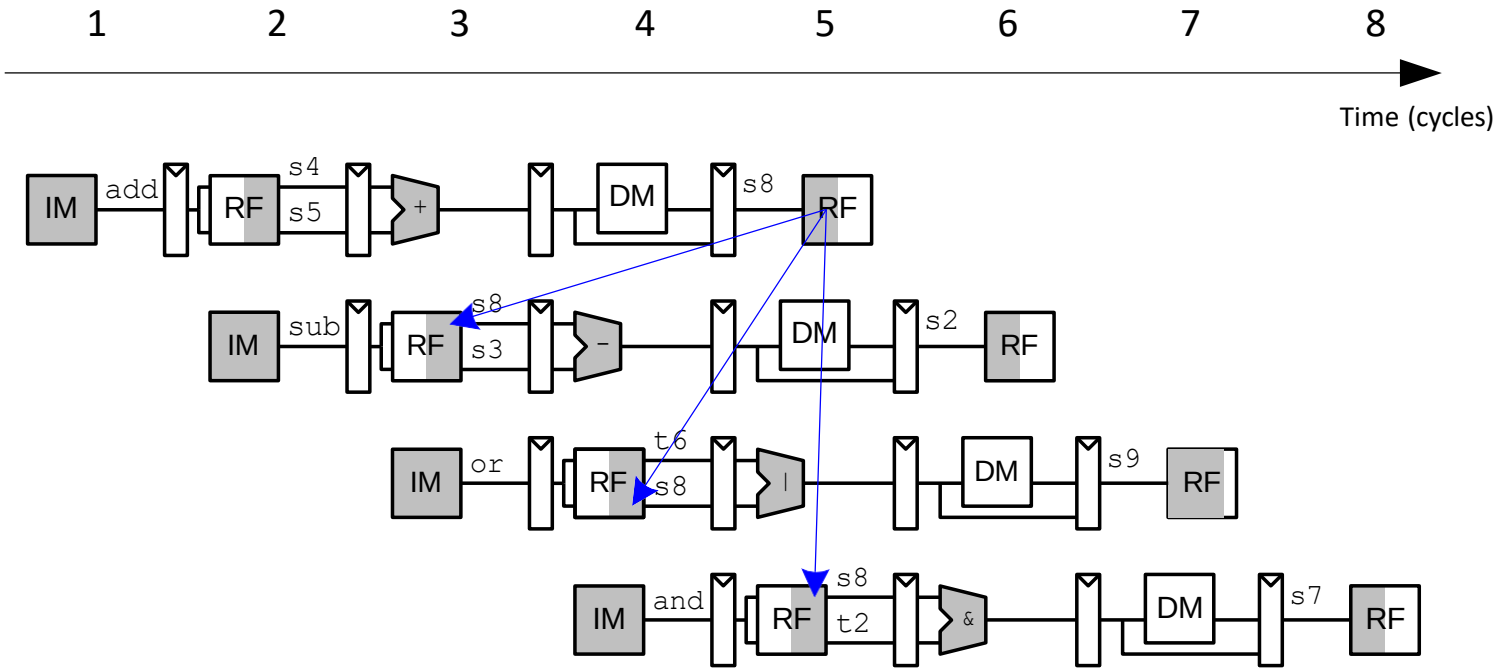

Handling Data Hazards

Handling Data Hazards

- **Insert** enough **nops** for result to be ready
- Or move independent useful instructions forward

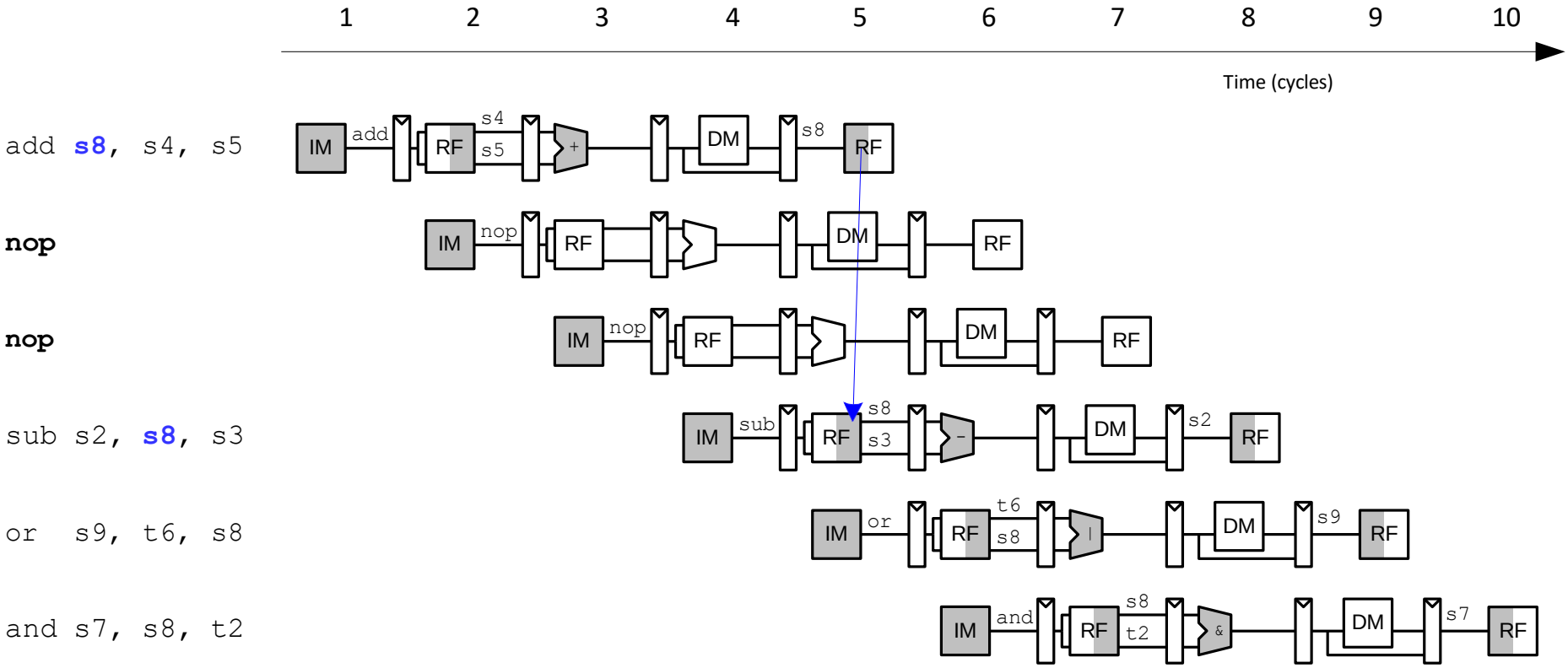

Data Forwarding

- Data is **available on internal busses** before it is written back to the register file (RF).
- **Forward data** from internal busses **to Execute stage**.

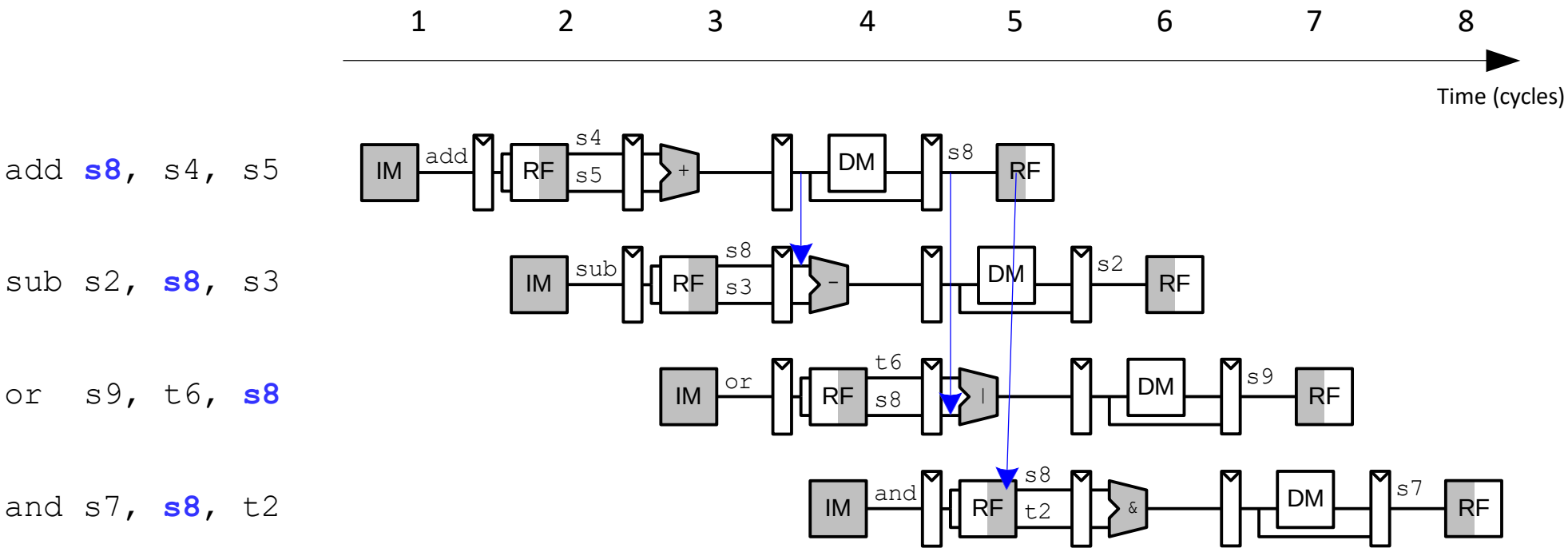

Data Forwarding

- Check if source register **in Execute stage matches** destination register of instruction **in Memory or Writeback stage**.
- If so, forward result.

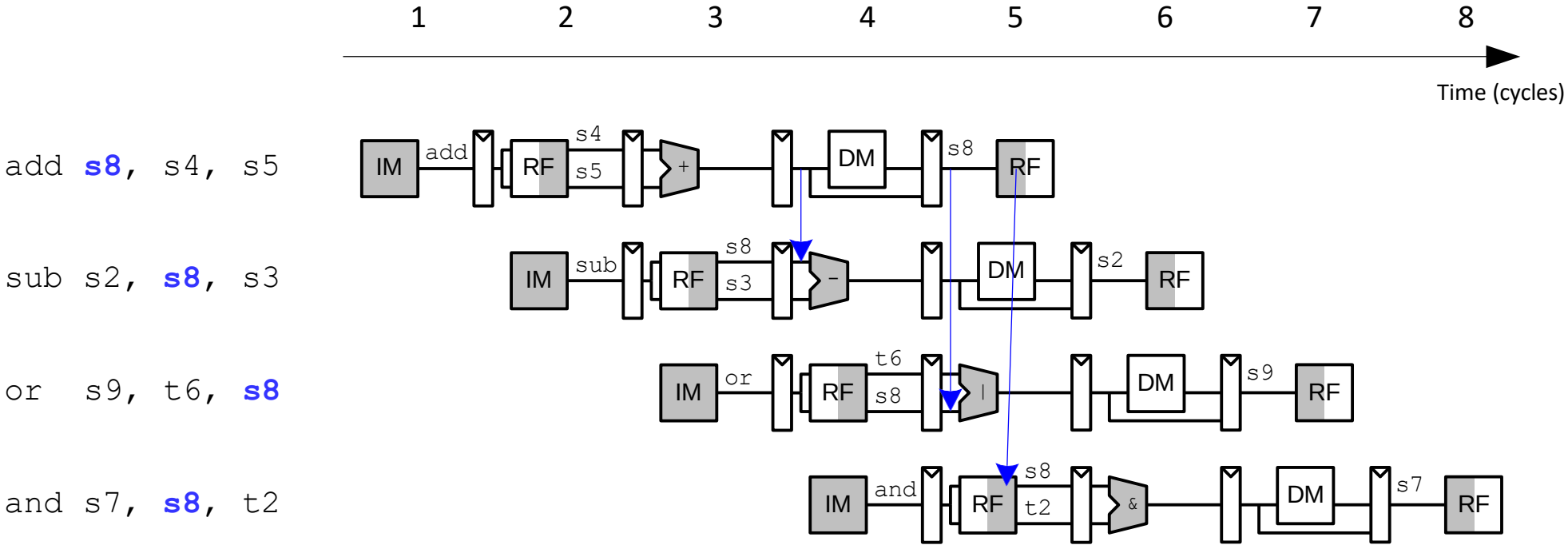

Data Forwarding: Hazard Unit

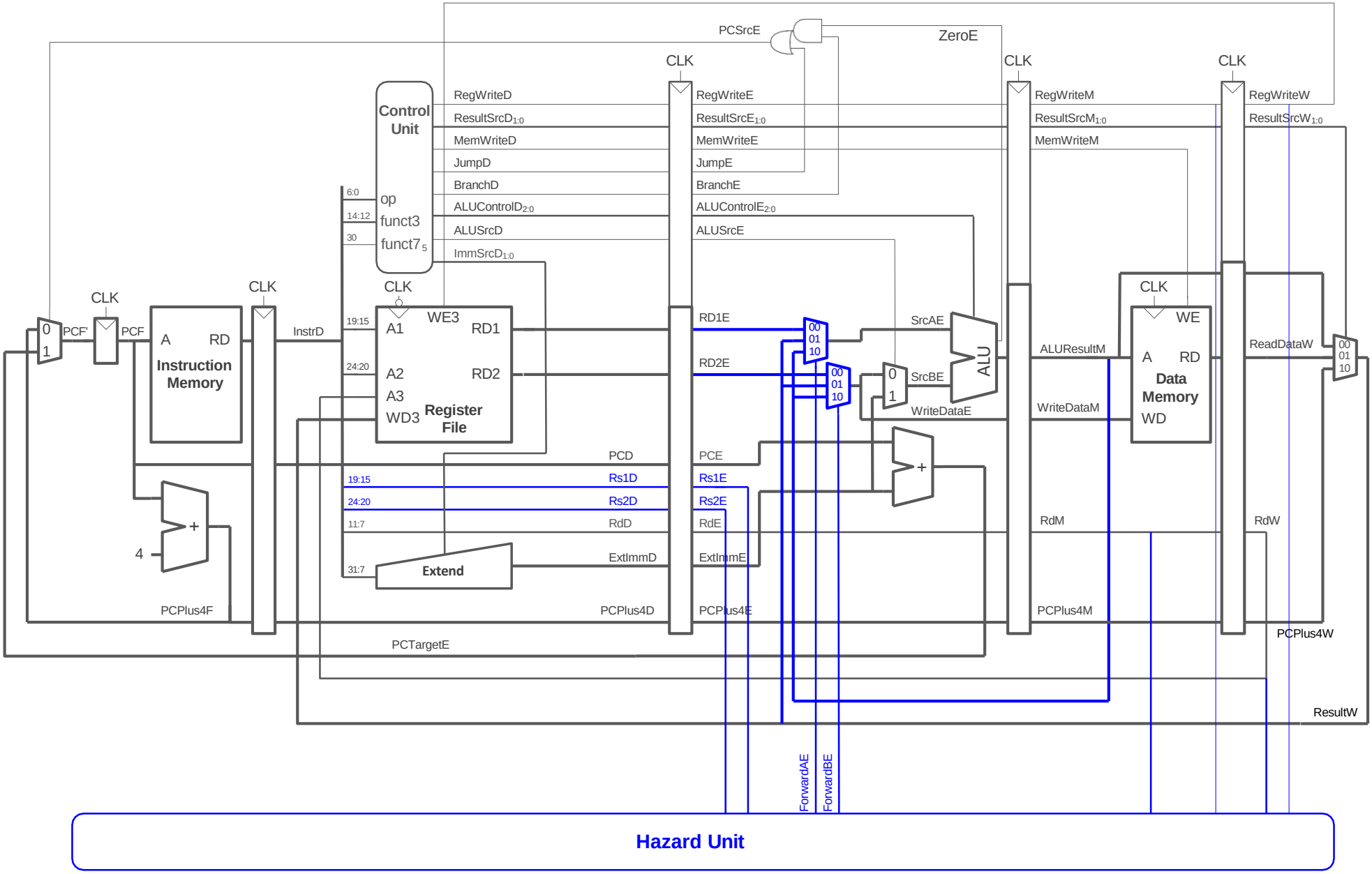

Data Forwarding

- **Case 1:** **Execute** stage *Rs1* or *Rs2* matches **Memory** stage *Rd*?
  Forward from Memory stage
- **Case 2:** **Execute** stage *Rs1* or *Rs2* matches **Writeback** stage *Rd*?
  Forward from Writeback stage
- **Case 3:** Otherwise use value read from register file (as usual)

Equations for *Rs1*:

if **((*Rs1E* == *RdM*) AND *RegWriteM*)** **// Case 1**
  ForwardAE = 10
else if **((*Rs1E* == *RdW*) AND *RegWriteW*)** **// Case 2**
  ForwardAE = 01
else *ForwardAE* = 00 **// Case 3**

ForwardBE *equations are similar (replace* ***Rs1E*** *with* ***Rs2E****)*

Data Forwarding

- **Case 1:** **Execute** stage *Rs1* or *Rs2* matches **Memory** stage *Rd*?
  Forward from Memory stage
- **Case 2:** **Execute** stage *Rs1* or *Rs2* matches **Writeback** stage *Rd*?
  Forward from Writeback stage
- **Case 3:** Otherwise use value read from register file (as usual)

Equations for *Rs1*:

if ((*Rs1E* == *RdM*) AND *RegWriteM*) AND (Rs1E != 0) // Case 1
    ForwardAE = 10
else if ((*Rs1E* == *RdW*) AND *RegWriteW*) AND (Rs1E != 0) // Case 2
    ForwardAE = 01
else *ForwardAE* = 00 // Case 3

ForwardBE *equations are similar (replace* ***Rs1E*** *with* ***Rs2E****)*

Data Hazard due to `lw` Dependency

```
lw   s7, 40(s5)
and s8, s7, t3
or  t2, s6, s7
sub s3, s7, s2
```

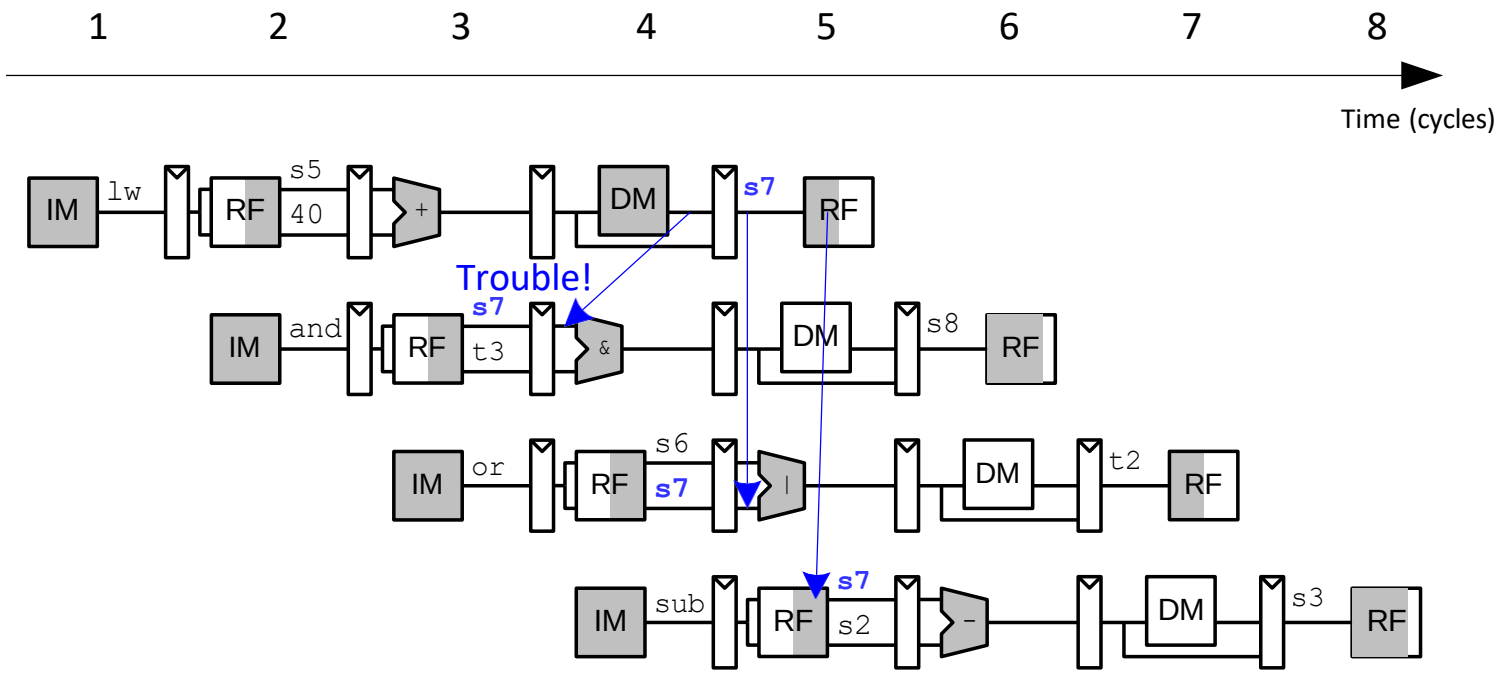

Stalling to solve `lw` Data Dependency

```
lw   s7, 40(s5)
and s8, s7, t3
or  t2, s6, s7
sub s3, s7, s2
```

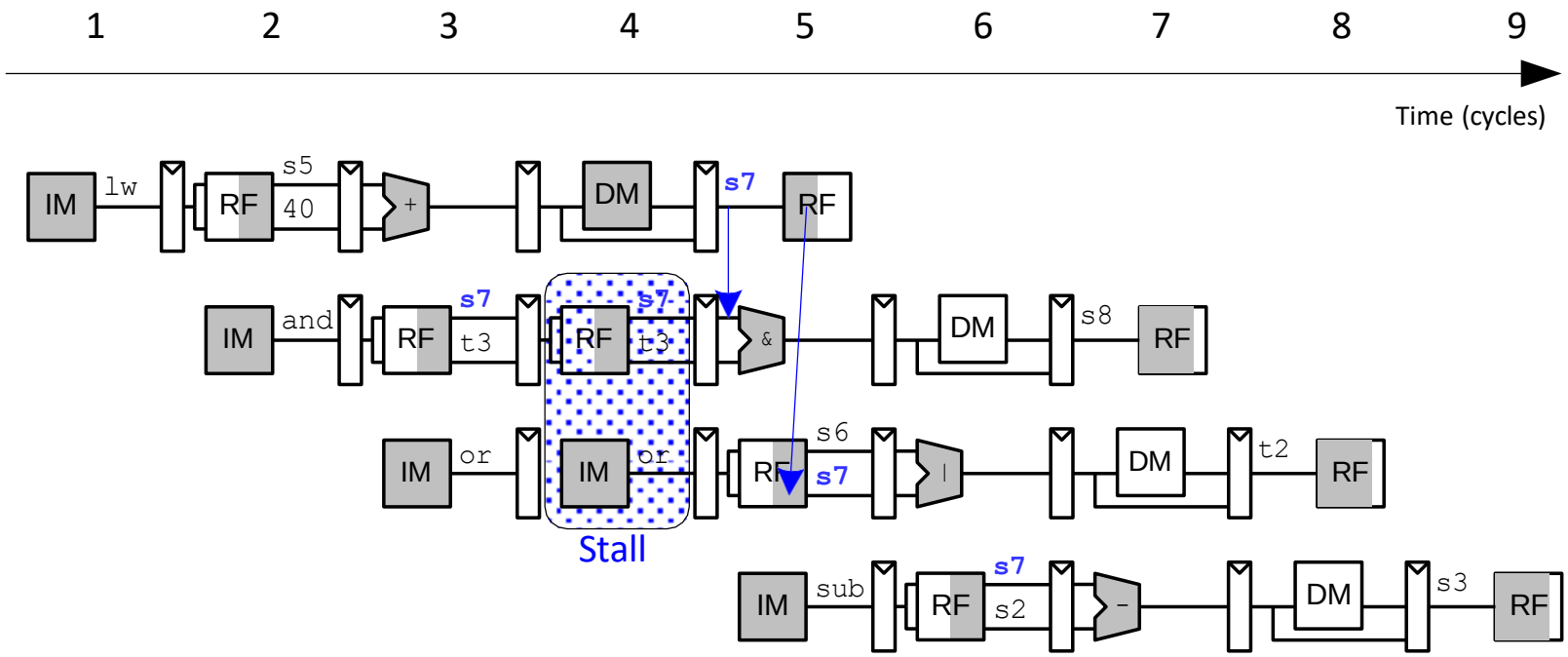

Stalling Logic

- Is either **source register in the Decode stage** the same as the **destination register in the Execute stage**?

  AND

- Is the instruction in the **Execute stage a `lw`**?

lwStall = **((*Rs1D* == *RdE*) OR (*Rs2D* == *RdE*))** **AND** ***ResultSrcE*$_0$**

StallF = ***StallD*** = ***FlushE*** = ***lwStall***

(Stall the Fetch and Decode stages, and flush the Execute stage.)

Stalling Hardware

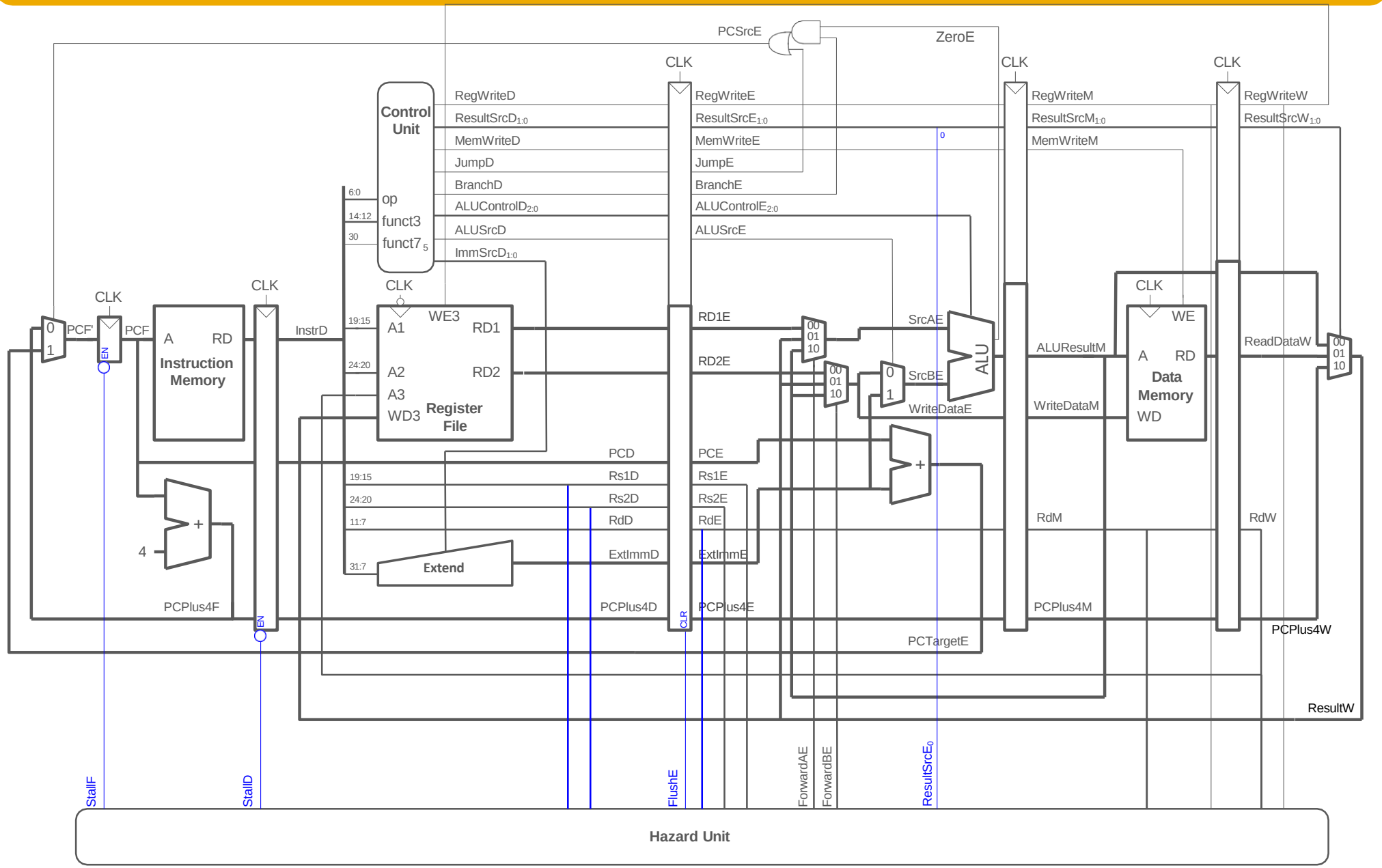

Chapter 7: Microarchitecture

Pipelined Processor Control Hazards

Control Hazards

- **beq:**
  - Branch **not determined until the Execute stage** of pipeline
  - **Instructions** after branch **fetched** before branch occurs
  - These **2 instructions must be flushed** if branch happens

Control Hazards

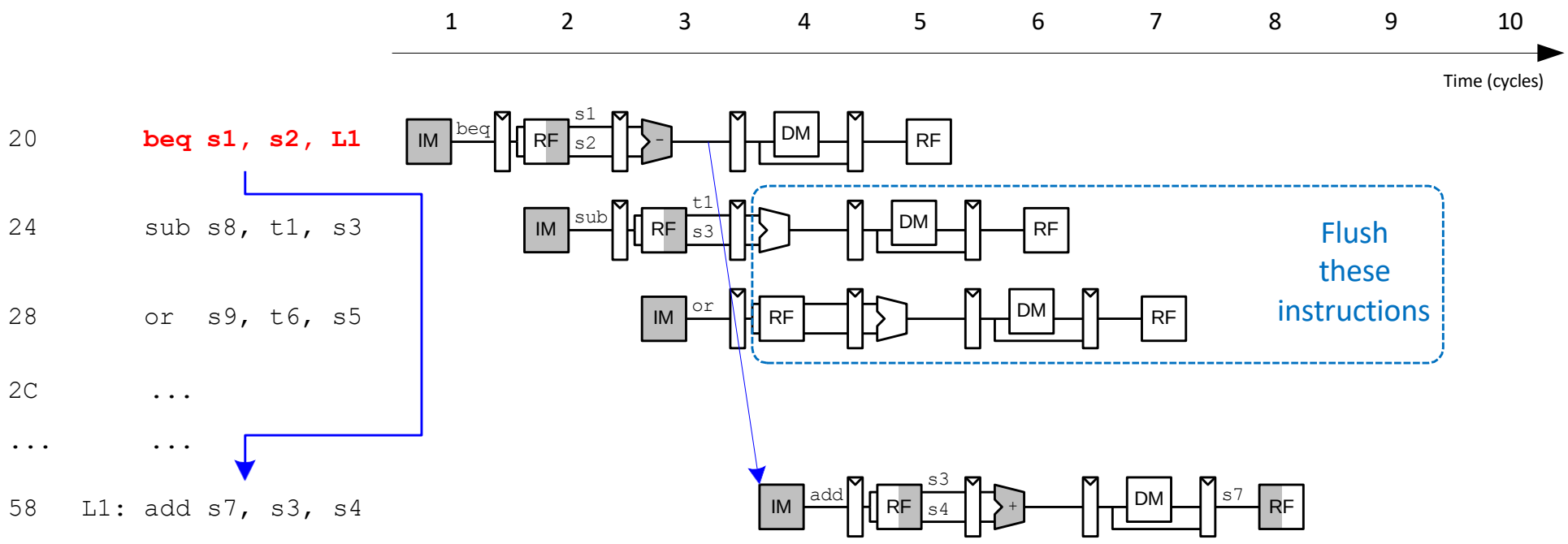

Branch misprediction penalty:

The number of instructions flushed when a branch is taken (in this case, 2 instructions)

Control Hazards: Flushing Logic

- If branch is taken in execute stage, need to flush the instructions in the Fetch and Decode stages
  - Do this by clearing Decode and Execute Pipeline registers using *FlushD* and *FlushE*
- **Equations:**

$$FlushD = PCSrcE$$

$$FlushE = lwStall \text{ OR } PCSrcE$$

Control Hazards: Flushing Hardware

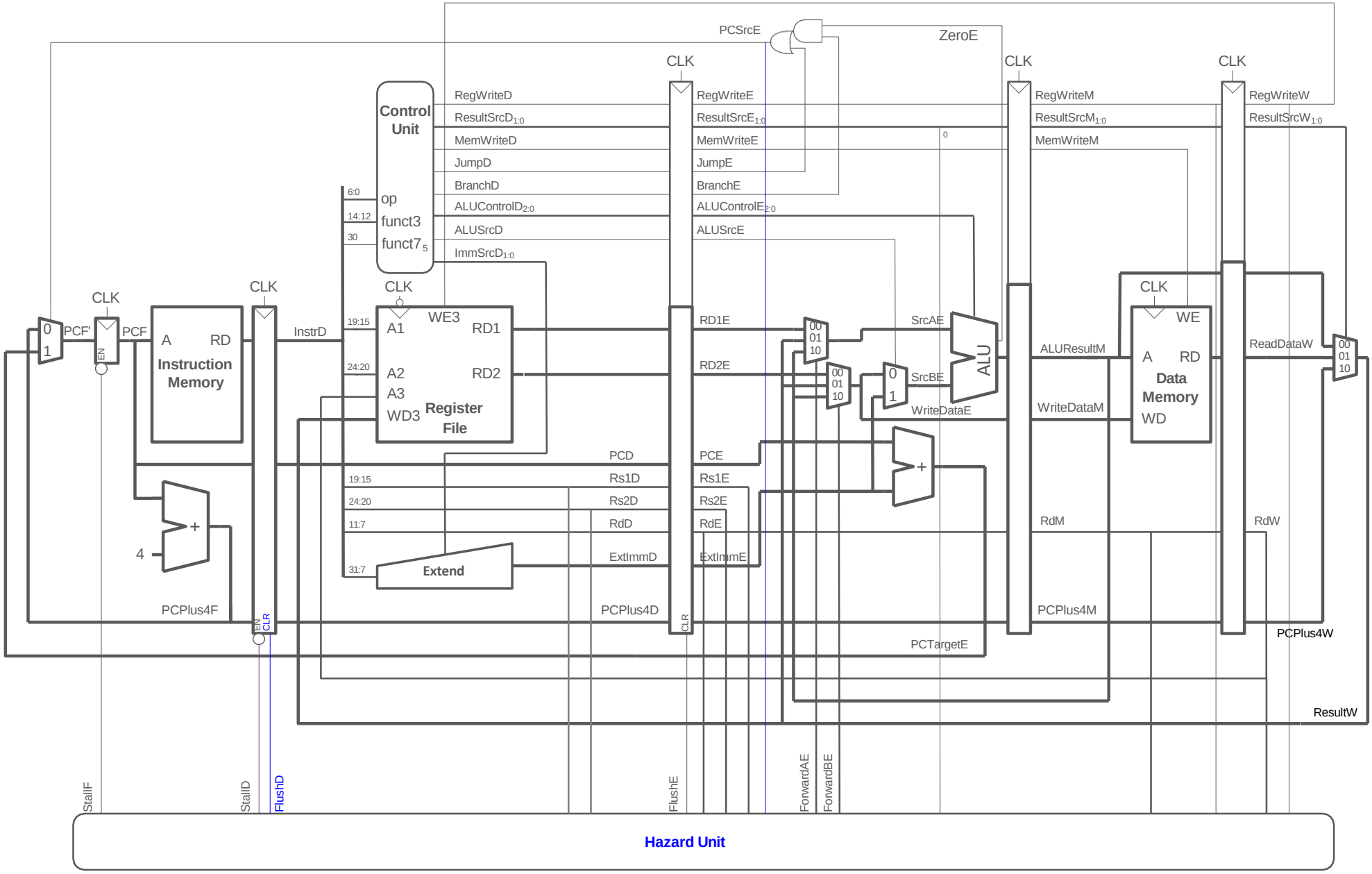

RISC-V Pipelined Processor with Hazard Unit

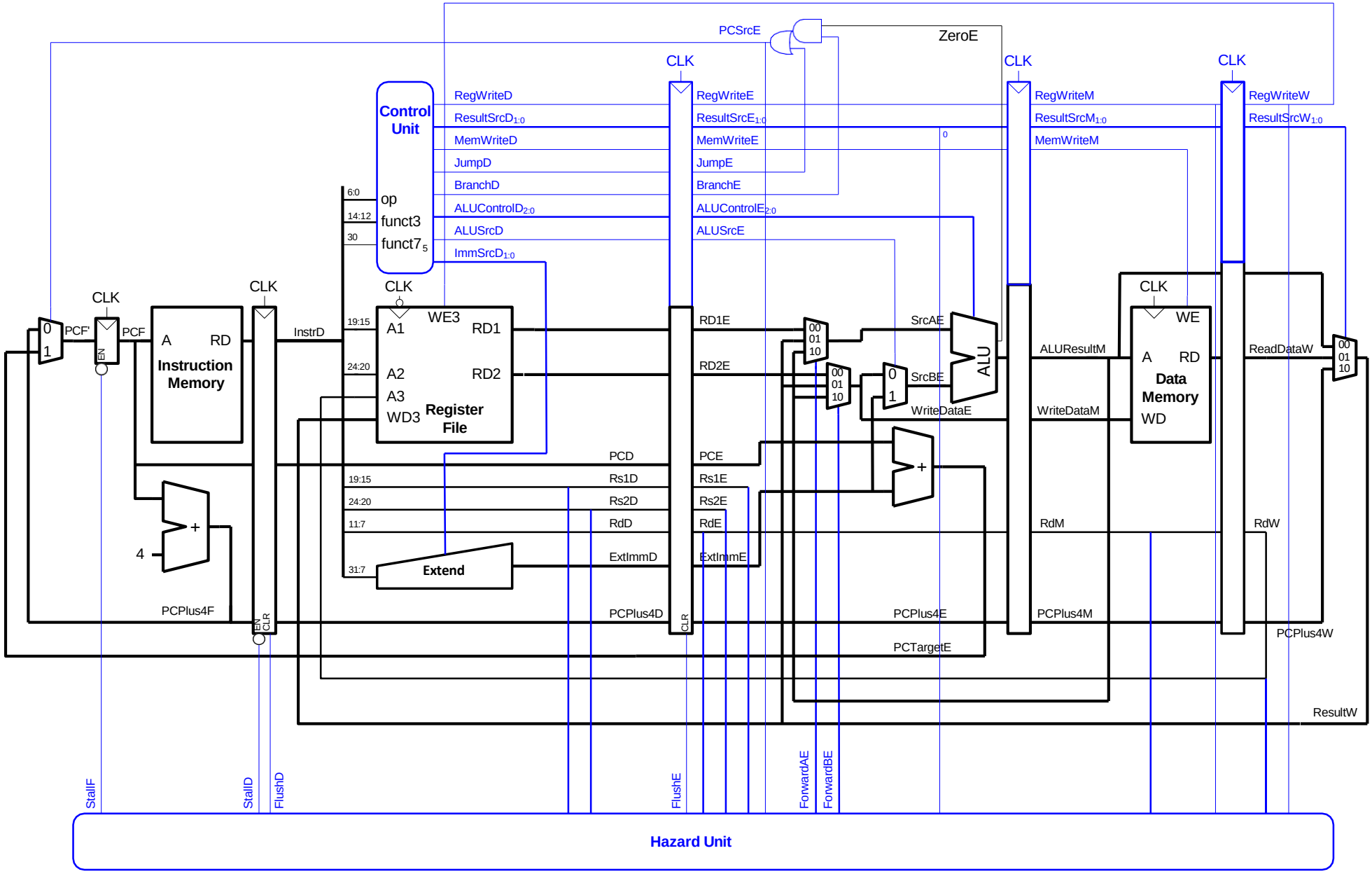

Summary of Hazard Logic

Data hazard logic (shown for SrcA of ALU):

if ((*Rs1E* == *RdM*) AND *RegWriteM*) AND (Rs1E != 0) // Case 1

ForwardAE = 10

else if ((*Rs1E* == *RdW*) AND *RegWriteW*) AND (Rs1E != 0) // Case 2

ForwardAE = 01

else ***ForwardAE*** = 00 // Case 3

Load word stall logic:

lwStall = ((*Rs1D* == *RdE*) OR (*Rs2D* == *RdE*)) AND $ResultSrcE_0$

StallF = ***StallD*** = *lwStall*

Control hazard flush:

FlushD = *PCSrcE*

FlushE = *lwStall* OR *PCSrcE*

Pipelined Performance

Pipelined Processor Performance Example

- **SPECINT2000 benchmark:**
  - 25% loads
  - 10% stores
  - 13% branches
  - 52% R-type
- **Suppose:**
  - 40% of loads used by next instruction
  - 50% of branches mispredicted
- **What is the average CPI?** (Ideally it's 1, but…)

Pipelined Processor Performance Example

Pipelined processor critical path:

$T_{c_pipelined}$ = max of

$t_{pcq} + t_{mem} + t_{setup}$	**Fetch**
$2(t_{RFread} + t_{setup})$	**Decode**
$t_{pcq} + 4t_{mux} + t_{ALU} + t_{AND\text{-}OR} + t_{setup}$	**Execute**
$t_{pcq} + t_{mem} + t_{setup}$	**Memory**
$2(t_{pcq} + t_{mux} + t_{RFwrite})$	**Writeback**

- Decode and Writeback stages **both use the register file** in each cycle
- So each stage gets half of the cycle time (**T_c/2**) to do their work
- Or, stated a different way, **2x of their work** must fit in a cycle (T_c)

Pipelined Critical Path: Execute Stage

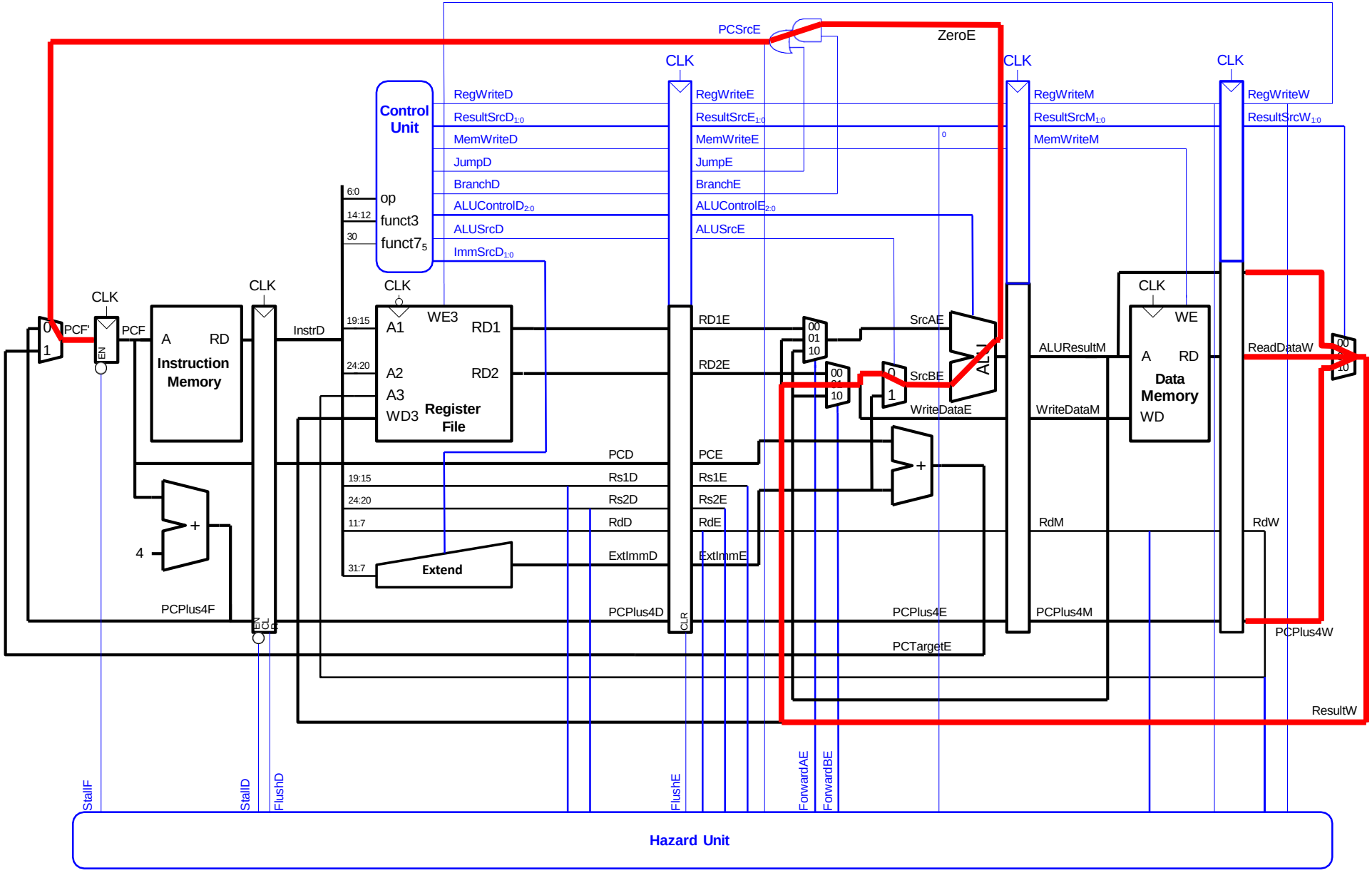

Pipelined Performance Example

Element	Parameter	Delay (ps)
Register clock-to-Q	t_{pcq_PC}	40
Register setup	t_{setup}	50
Multiplexer	t_{mux}	30
AND-OR gate	$t_{AND\text{-}OR}$	20
ALU	t_{ALU}	120
Decoder (Control Unit)	t_{dec}	25
Extend unit	t_{dec}	35
Memory read	t_{mem}	200
Register file read	t_{RFread}	100
Register file setup	$t_{RFsetup}$	60

$$T_{c_pipelined} = t_{pcq} + 4t_{mux} + t_{ALU} + t_{AND\text{-}OR} + t_{setup}$$

$$=$$

Pipelined Performance Example

Program with 100 billion instructions

Execution Time $= (\#\text{ instructions}) \times \text{CPI} \times T_c$

$= (100 \times 10^9)(1.23)(350 \times 10^{-12})$

= 43 seconds

Processor Performance Comparison

Processor	Execution Time (seconds)	Speedup (single-cycle as baseline)
Single-cycle	75	1
Multicycle	155	0.5
Pipelined	43	1.7