BLUE SEAL EVOLUTION SERIES®

Technical data sheet for

BENCH TOPS 600mm

B60-CB, B60-LS

- Heavy-duty construction
- Cabinet Base or Leg Stand
- Stainless steel exterior
- Easy clean
- Fully modular

B60-CB

Overall Construction

Bench Top

- 3.5mm thick compound work surface
  - 1.5mm 304 stainless steel top
  - 2.0mm galvanised steel backing
- Welded 1.5mm stainless steel bull nose
- Splashback and side panels 1.2mm stainless steel

Cabinet Base (supplied as –CB model)

- Modular for suite matched finish
- Double skin 0.9mm stainless steel interior and exterior
- GN 1/1 4 position racking kit
- 63mm dia. heavy-duty 1.2mm stainless steel legs with adjustable feet

Leg Stand (Supplied as –LS model)

- Modular for suite matched finish
- 63mm dia. heavy-duty 1.2mm stainless steel legs with adjustable feet
- Framed stand shelf with 0.9mm stainless steel finish
- Quick assembly design (no tools required)

B60-LS

Technical data sheet for

BENCH TOPS 600mm

Specifications

Dimensions
Width 600mm
Depth 812mm
Height 915mm
Incl. splashback 1085mm

Nett weight

Cabinet Base models
59kg

Leg Stand models
47kg

Packing data

Cabinet Base models
0.55m3, 111kg
Width 645mm
Depth 870mm
Height 1260mm

Leg Stand models
0.29m3, 83kg
Width 645mm
Depth 870mm
Height 665mm

Options at extra cost
Castors

B60-CB
Cabinet Base

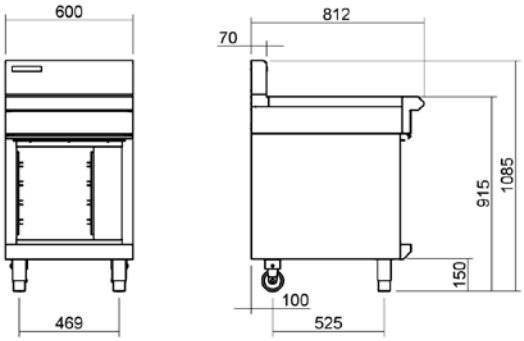

B60-LS
Leg Stand

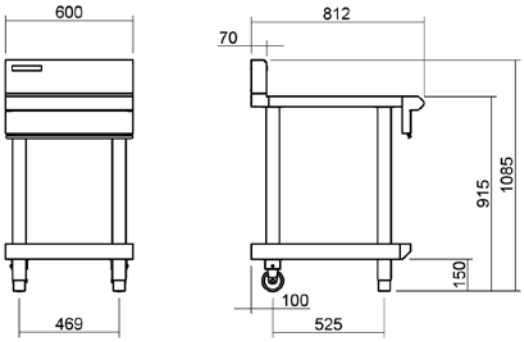

B60

BLUE SEAL EVOLUTION SERIES®

MOFFAT

Australia
www.moffat.com.au
New Zealand
www.moffat.co.nz

www.bluesealevolution.com

Australia
Moffat Pty Limited

Victoria/Tasmania
740 Springvale Road
Mulgrave, Victoria 3170
Telephone 03-9518 3888
Facsimile 03-9518 3833
vsales@moffat.com.au

New South Wales
Telephone 02-8833 4111
nswsales@moffat.com.au

South Australia
Telephone 03-9518 3888
vsales@moffat.com.au

Queensland
Telephone 07-3630 8600
qldsales@moffat.com.au

Western Australia
Telephone 08-9202 6820
bgarcia@moffat.com.au

New Zealand
Moffat Limited

Christchurch
16 Osborne Street
Christchurch 8011
Telephone 03-389 1007
Facsimile 03-389 1276
sales@moffat.co.nz

Auckland
Telephone 09-574 3150
sales@moffat.co.nz

24:7 Service Support

ISO 9001 SGS
ISO9001
Quality Management Standard

Designed and manufactured by
MOFFAT

ISO9001
All Blue Seal products are designed and manufactured by Moffat using the internationally recognised ISO9001 quality management system, covering design, manufacture and final inspection, ensuring consistent high quality at all times.

In line with policy to continually develop and improve its products, Moffat Limited reserves the right to change specifications and design without notice.

Printed in China

© Copyright Moffat Ltd

Moffat / 7.09 / 1140