iM 44

Spiral kneading machine for pizza, pastry and bakery

EXTERNAL CONSTRUCTION

- Structure in powder painted stainless steel.
- Spiral, basin, dough-breaker and safety grille in stainless steel.
- Thick frame to avoid vibrations in every working phase.
- Push-button panel on the right side.
- Machinery on rotating wheels.

INTERNAL CONSTRUCTION

- Motorization with bath oil motoreducer.
- Chain drive.
- Rotating transmission parts are assembled on self lubricating ball bearings.
- Electrical equipment with low-voltage auxiliary circuit.
- Safety device for grille.

OPERATION

- Dough homogenity and oxygenation by the combined rotating movement of the utensil and basin.
- The shape of the spiral assures a low and constant temperature of dough during the working.
- Possibility to mix maximum 44 Kg in few minutes.

STANDARD EQUIPMENT

- Spiral
- Basin
- Dough-breaker
- Rotating wheels
- Timer

MORETTI FORNI S.P.A.
www.morettiforni.com
info@morettiforni.com
Via A.Meucci, 4 - 61037 Mondolfo (PU) ITALIA
Tel. +39.0721.96161 - Fax +39.0721.9616299

OPTIONS AND ACCESSORIES
(WITH SURCHARGE)

- Two speeds machine
- Two-speed reinforced machine with pinions and double crown gear, plus double chain for special processing (“SP” model)

iM 44

TOP VIEW

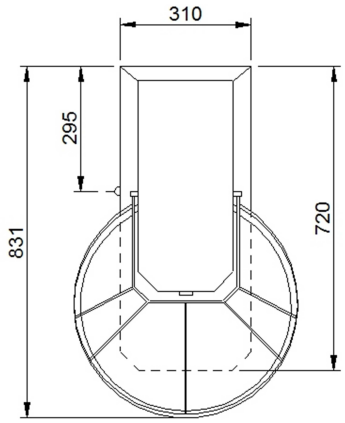

REAR VIEW

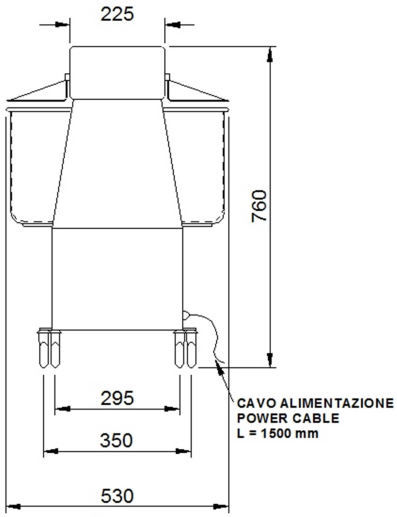

RIGHT SIDE VIEW

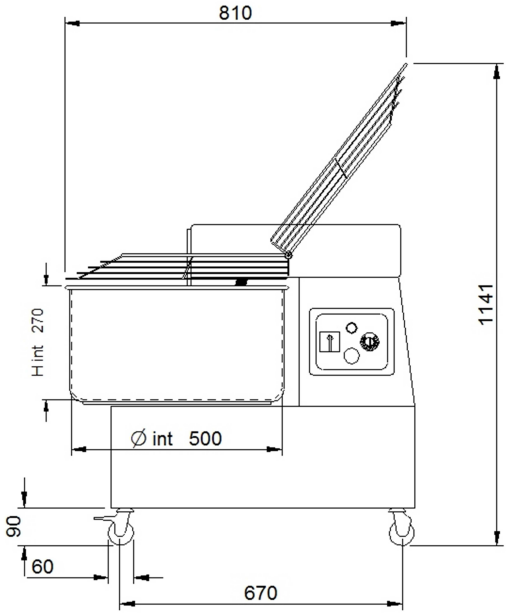

Note: The dimensions indicated in the views are in millimeters

SPECIFICATIONS

Spiral kneading with firm head, ideal for small spaces with rotating wheels. To the construction are used height quality and robustness materials. Thanks to the particular shape of spiral and to the rotating movement of the utensil combined with that of the basin, the spiral kneading, gives possibility to mix in few minutes 44 Kg dough, and assures very good homogeneity and oxygenation. The model assure constant temperature of the dough from beginning to end working, so eliminate the danger of incidental overheating. The transmission system is particularly silent because all parts are assembled on waterthigt ball bearings with bath oil motoreducer, free maintenance. The machinery is provided of indispensables safety devices .

TECHNICAL FEATURES

DIMENSIONS

External height	760 mm
External depth	831 mm
External width	530 mm
Weight	105 kg

BASIN CAPACITY

Capacity (dough)	44 kg
Capacity (volume)	50 lt
Basin internal diameter	500 mm
Basin internal height	270 mm
Spiral diameter	24 mm

SHIPMENT INFORMATIONS

Packed machinery:	
Max height	840 mm
Max depth	935 mm
Max width	525 mm
Weight	(105+5)kg

FEEDING AND POWER

Standard feeding

A.C. V400 3 Power 1.5 kW
Frequency 50 Hz

Feeding on request

A.C. V230 3 Power 1.5 kW
A.C. V230 1N Power 1.5 kW
Frequency 50 Hz

On request frequency 60 Hz

Two speeds machine not available with V230 1N

-NOTE: Moretti Forni Spa reserves the right to modify the characteristics of the products illustrated in this publication without prior notice