iM R 25/2V

Spiral kneading machine with raising head for pizza, pastry and bakery

EXTERNAL CONSTRUCTION

- Structure in powder painted stainless steel.
- Spiral, basin, dough-breaker and safety grille in stainless steel.
- Thick frame to avoid vibrations in every working phase.
- Push-button panel on the right side.
- Machinery on rotating wheels.

INTERNAL CONSTRUCTION

- Motorization with bath oil motoreducer.
- Chain drive.
- Rotating transmission parts are assembled on self lubricating ball bearings.
- Electrical equipment with low-voltage auxiliary circuit.
- Safety device for grille and raising head.
- Basin presence sensor.
- Head check pivot pin.
- Disk for speedy locking and unhooking of basin.

OPERATION

- Dough homogenity and oxygenation by the combined rotating movement of the utensil and basin.
- The shape of the spiral assures a low and constant temperature of dough during the working.
- Possibility to mix maximum 25 Kg in few minutes and different food products.
- Extractable basin for dough easy dough drawing and cleaning.

STANDARD EQUIPMENT

- Spiral
- Exstractable Basin
- Dough-breaker
- Rotating wheels with brake
- Timer
- 2 speeds

MORETTI FORNI S.P.A.
www.morettiforni.com
marketing@morettiforni.com
Via A.Meucci, 4 - 61037 Mondolfo (PU) ITALIA
Tel. +39.0721.96161 - Fax +39.0721.9616299

iM R 25/2V

TOP VIEW

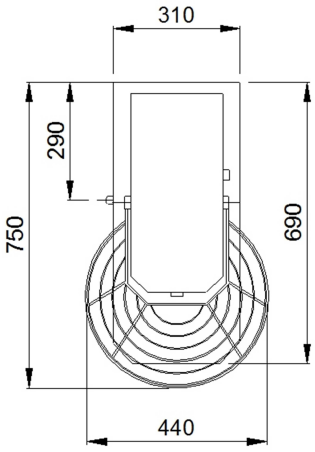

REAR VIEW

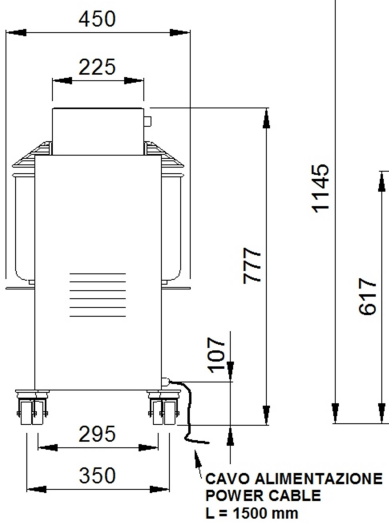

RIGHT SIDE VIEW

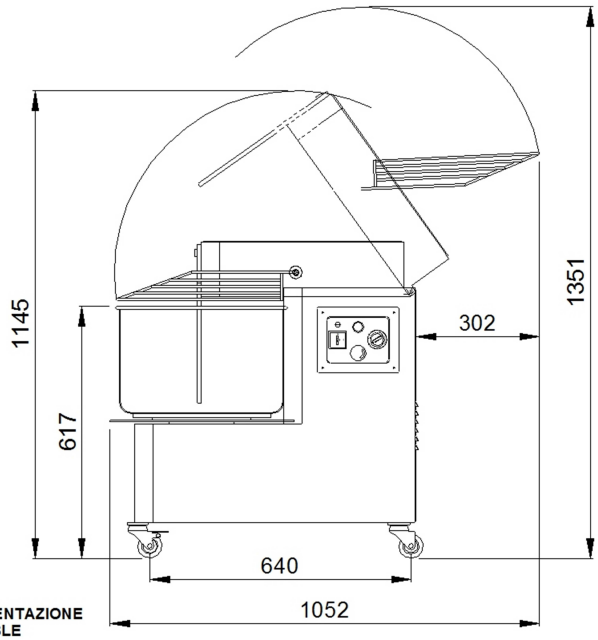

Note: The dimensions indicated in the views are in millimetres

SPECIFICATIONS

Spiral kneading with raising head, ideal for small spaces with rotating wheels. To the construction are used height quality and robustness materials. Thanks to the particular shape of spiral and to the rotating movement of the utensil combined with that of the basin, the spiral kneading, gives possibility to mix in few minutes 25 Kg dough, and assures very good homogeneity and oxygenation. The model assure constant temperature of the dough from beginning to end working, so eliminate the danger of incidental overheating. Extractable basis give possibility easy dough drawing and cleaning. The transmission system is particularly silent because all parts are assembled on waterthigt ball bearings with bath oil motoreducer, free maintenance. The machinery is provided of two speeds motor, timer and of indispensables safety devices .

TECHNICAL FEATURES

DIMENSIONS

External height	777 mm
External depth	750 mm
External width	450 mm
Weight	119 kg

BASIN CAPACITY

Capacity (dough)	25 kg
Capacity (volume)	33 lt
Basin internal diameter	400 mm
Basin internal height	260 mm
Spiral diameter	22 mm

SHIPMENT INFORMATIONS

Packed machinery:

Max height	840 mm
Max depth	800 mm
Max width	480 mm
Weight	(119+7)kg

FEEDING AND POWER

Standard feeding
A.C. V400 3 Power 2v 1/1.4 kW
Frequency 50 Hz

Feeding on request
A.C. V230 3 Power 2v 1/1.4 kW

Frequency 50 Hz

On request frequency 60 Hz

-NOTE: Moretti Forni Spa reserves the right to modify the characteristics of the products illustrated in this publication without prior notice