Global Tapware

WaterMark
Certificate No: 23008

CATEGORY:
'GLOBAL RINSE MAID' Series

DESCRIPTION:
PRE RINSE + ADD ON POT FILLER w/-
DUAL HOB TAP

PRODUCT NUMBER:
GRM032512 (See chart for other models)

TECHNICAL INFORMATION:
- IDEAL WORKING PRESSURE 60 - 100 PSI
- Min. EFFECTIVE PRESSURE 45+ PSI
- MAX. PRESSURE = 200 PSI STATIC (in short periods)
- WORKING TEMPERATURE 5 C - 65 C
- SHIPPING WEIGHT 5KGS (approx)
- THREADED MECHANICAL JOINTS

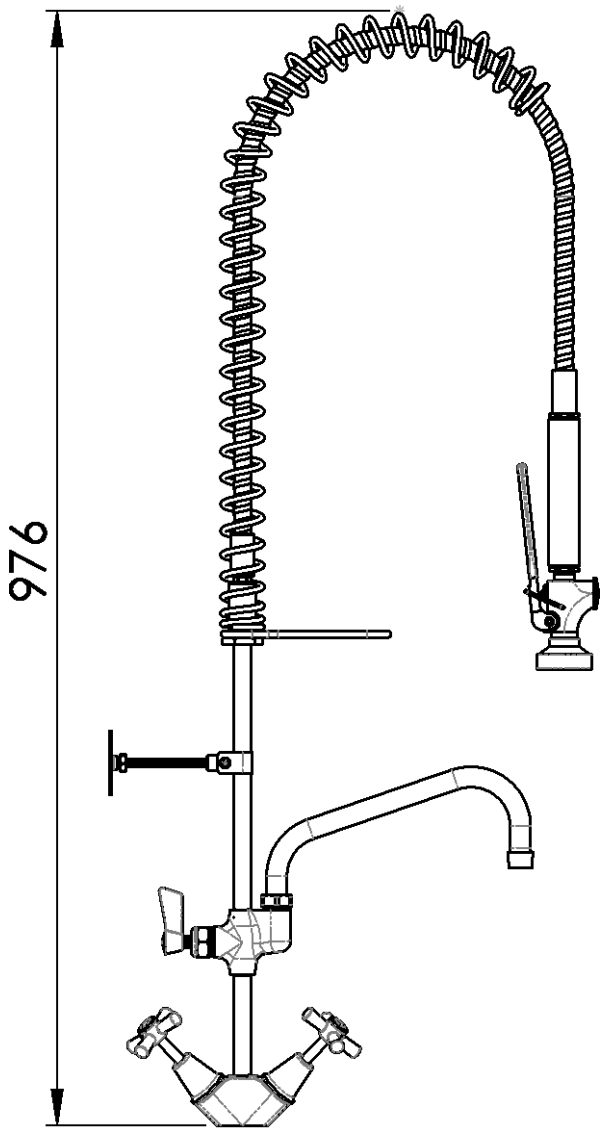

SUPPLIED WITH:
- CP SPRAY GUN + HANDLE (WELS 6 STAR)
- S/S BRAIDED PVC COATED HOSE 915 mm LONG
- S/S RETAINER + CP SPRING GUARD + S/S HOOK + RISER
- CP BRASS ADD ON Pot Filler (WELS 3 STAR)
- CP DUAL HOB TAP (Australian Made)

FEATURES:

HOSE:
- S/S 915mm LONG
- S/S END FITTINGS
- HIGH QUALITY, HARD WEARING ROBUST INNER HOSE TUBING

SPRAY VALVE & HANDLE:
- CHROME PLATED BRASS with INSULATED BLACK HANDLE
- FLAT CHROME PLATED METAL SQUEEZE LEVER WITH INSULATION COVERING & FLAT WIDE STOPPER.
- SQUEEZE LEVER IS CONSTANT IN MAINTAINING OF IT'S POSITION.
- QUICK RELEASE ON/OFF CLIP ON SQUEEZE LEVER FOR SAFETY.
- 15 DEGREE FLAT HIGH PRESSURE SPRAY FOR BEST CLEANING

ADDITIONAL SPRAY VALVE INFO:
- LOW ENERGY CONSUMPTION = HIGH $ SAVINGS
- LOW WATER CONSUMPTION = HIGH $ SAVINGS
- EXTREMELY ROBUST - ENGINEERED TO LAST
- INTERCHANGEABLE WITH MOST SIMILAR BRANDS AT HANDLE (fits into 3/4"unf female handle)

ADD-ON SPOUT - aka ADD-ON POT FILLER:
- CURRENT MODEL SUITS 'GLOBAL FISHER' & 'RINSE MAID'
- CP DIVERTER TAP BODY with RISER & SWIVEL SPOUTS TO SUIT

DUAL HOB TAP:
- DUAL HOB TAP - 3/8" OUTLET, ½" x 500mm Inlet Tails.

SPARE PARTS
- REPAIR KITS FOR ALL SBA'S TAPS & POT FILLERS
- REPAIR KIT FOR TRIGGER VALVE
- REPLACEMENT PARTS READILY AVAIABLE from plumbing stores

WARRANTY
- 18 MONTH ONSITE WARRANTY ON FAULTY MATERIAL/ WORKMANSHIP.

WELS
SPOUT = 3.5 STAR, 9lpm / SPRAY Gun = 6 STAR, 3.5lpm

Available Spout Range

REF	LENGTH IN/mm	PT.NO.
A	6"/179mm	GRM032506-FH
B	8"/227mm	GRM032508-FH
C	10"/276mm	GRM032510-FH
D	12"/326mm	GRM032512-FH
E	14"/376mm	GRM032514-FH

WATERMARK & WELS:
Global Tapware Pty Ltd is a Watermarked, level 1 & 2, Company.
All relevant products & components are WELS registered.

Special Notice:
1-We reserve the right to make changes to products and drawings without notice.
2- All drawings & documents are subject to copyright (c).
3- Seek written consent by us to reprint/use other than in specification work.

'GLOBAL RINSE MAID' Series PT No.: **GRM03251**

PRE RINSE + ADD ON POT FILLER w/- DUAL HOB TAP