CATEGORY:
HAND-Z-FREE™

DESCRIPTION:
TIME FLOW TAP

PRODUCT NUMBER:
GTFP3-15

TECHNICAL INFORMATION:
½" INLET

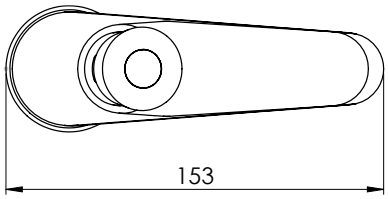

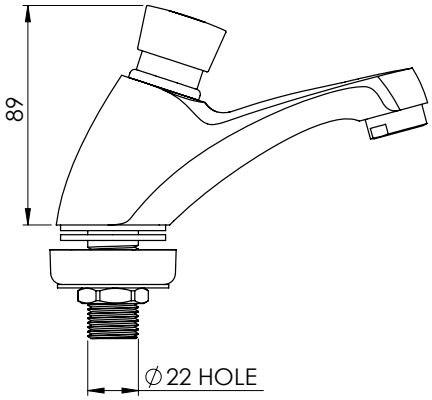

FEATURES:

- PILLAR / BASIN MOUNTED
- ADJUSTABLE TIMING FROM 3 TO 15 SECONDS
- EASY PUSH BUTTON TO OPERATE.
- 5 STAR RATED – 6LPM

WARRANTY

- 12 MONTH ONSITE OR REPLACEMENT WARRANTY

WATERMARK & WELS:

Global Tapware Pty Ltd is a Watermarked, level 1 & 2, Company.
All relevant products & components are WELS registered.

Special Notice:

1-We reserve the right to make changes to products and drawings without notice.
2- All drawings & documents are subject to copyright (c).
3- Seek written consent by us to reprint/use other than in specification work.

HAND-Z-FREE PT No.: **GTFP3-15**

TIME FLOW TAP