Global Tapware

WATER RATING 3.5 Litres per minute

WaterMark Certificate No: 23008

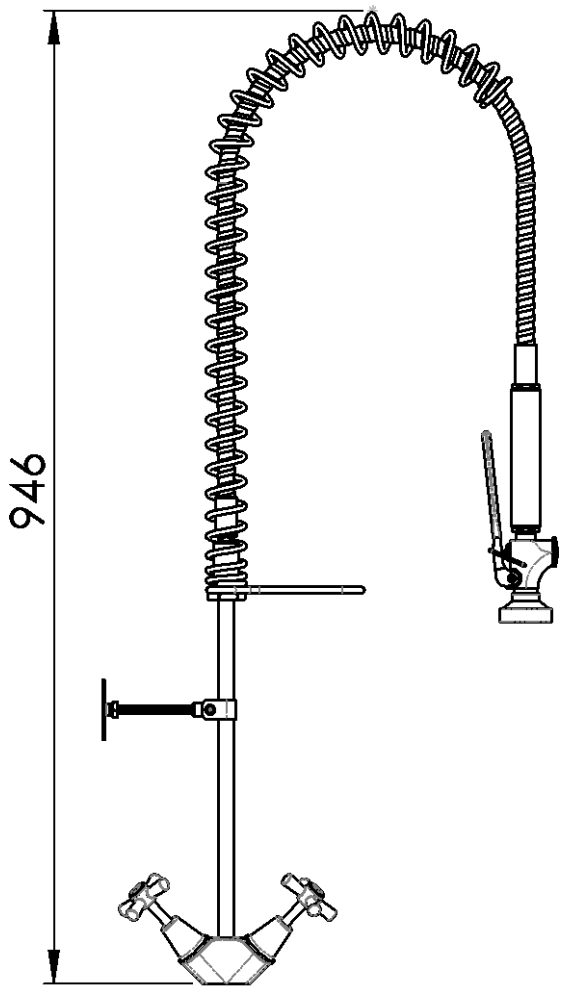

CATEGORY:
'GLOBAL RINSE MAID' Series

DESCRIPTION:
PRE RINSE w/- DUAL HOB TAP

PRODUCT NUMBER:
GRM032100

TECHNICAL INFORMATION:
- IDEAL WORKING PRESSURE 60 - 100 PSI
- Min. EFFECTIVE PRESSURE 45+ PSI
- MAX. PRESSURE = 200 PSI STATIC (in short periods)
- WORKING TEMPERATURE 5 C - 65 C
- SHIPPING WEIGHT 5KGS (approx.)
- THREADED MECHANICAL JOINTS

SUPPLIED WITH:
- CP SPRAY GUN + HANDLE (WELS 6 STAR)
- S/S BRAIDED, PVC COATED HOSE 915 mm LONG
- S/S RETAINER + CP SPRING GUARD + S/S HOOK + RISER
- S/S WALL BRACKET
- CP DUAL HOB TAP

FEATURES:

HOSE:
- S/S BRAIDED 915mm LONG
- SWIVEL END FITTINGS
- HIGH QUALITY, HARD WEARING ROBUST INNER HOSE TUBING

SPRAY VALVE & HANDLE:
- BLACK PLASTIC INSULATED HANDLE WITH BRASS / CHROME INNER & ENDS
- FLAT CHROME METAL SQUEEZE LEVER WITH INSULATION COVERING & FLAT WIDE STOPPER FOR DURABILITY AND LONGEVITY.
- SQUEEZE LEVER IS CONSTANT IN MAINTAINING OF IT'S POSITION.
- QUICK RELEASE ON/OFF CLIP ON SQUEEZE LEVER FOR SAFETY, OH&S.
- 15 DEGREE FLAT HIGH PRESSURE SPRAY FOR PROVEN BEST CLEANING.

ADDITIONAL SPRAY VALVE INFO:
- LOW ENERGY CONSUMPTION = HIGH $ SAVINGS
- LOW WATER CONSUMPTION = HIGH $ SAVINGS
- END USER FRIENDLY = LESS STRESS ON HANDS
- EXTREMELY ROBUST - ENGINEERED TO LAST
- INTERCHANGEABLE WITH MOST SIMILAR BRANDS AT HANDLE (fits into 3/4"unf female handle)

DUAL HOB TAP:
- Chrome DUAL HOB TAP - 3/8" OUTLET / ½" INLET TAILS
-

SPARE PARTS
- REPAIR KITS FOR ALL TAPS
- REPAIR KIT FOR TRIGGER VALVE
- REPLACEMENT PARTS READILY AVAIABLE FROM PLUMBING STORES

WARRANTY
- 18 MONTH ONSITE WARRANTY ON FAULTY MATERIAL/ WORKMANSHIP.

WELS

SPOUT = 3.5 STAR, 9lpm SPRAY GUN = 6 STAR, 3.5lpm

WATERMARK & WELS:

Global Tapware Pty Ltd is a Watermarked, level 1 & 2, Company.
All relevant products & components are WELS registered.

Special Notice:

1-We reserve the right to make changes to products and drawings without notice.
2- All drawings & documents are subject to copyright (c).
3- Seek written consent by us to reprint/use other than in specification work.

'GLOBAL RINSE MAID' Series PT No.: **GRM032100**

PRE RINSE w/- DUAL HOB TAP