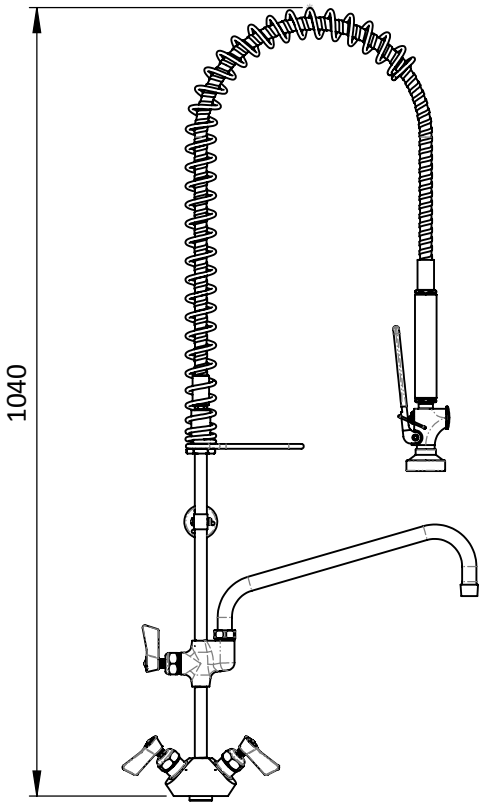

REF	LENGTH IN/mm	PT.NO.
A	6”/179mm	GF032506
B	8”/227mm	GF032508
C	10”/276mm	GF032510
D	12”/326mm	GF032512
E	14”/376mm	GF032514

CATEGORY:
'GLOBAL FISHER' Series

DESCRIPTION:
'GLOBAL FISHER'
PRE RINSE + ADD ON POT FILLER w/- S/S DEGREE SWIVEL CHECK STEM JUMPER VALVES.

PRODUCT NUMBER:
GF032512 + Other Sizes
(See chart to the left)

TECHNICAL INFORMATION:
- IDEAL WORKING PRESSURE 60 - 100 PSI
- Min. EFFECTIVE PRESSURE 45+ PSI
- MAX. PRESSURE = 200 PSI STATIC (in short periods)
- WORKING TEMPERATURE 65 c To Peak Max.80 c
- SHIPPING WEIGHT 5KGS (approx.)
- THREADED MECHANICAL JOINTS

SUPPLIED WITH:
- CP SPRAY GUN (3.5lpm/WELS 6 Star)
- S/S ARMOURFLEX HOSE 900 mm LONG
- CP SPRING GUARD + RETAINER + HOOK
- S/S 10 1/2" RISER & Spring Retainer
- S/S WALL BRACKET
- CP ADD ON POT FILLER w/- CP 41/2" Riser (See chart for spout lengths)
- S/S Dual Hob Tap.

FEATURES:

TAP BODY:
- S/S INTERNAL WORKINGS
- S/S 360 DEGREE SWIVEL SPRING CHECK STEMS JUMPER VALVES
- C.P. LEVER HANDLES

ARMOURFLEX HOSE:
- 915MM LONG (36 INCHES)
- S/S ARMOURFLEX EXTERNAL JACKET w/- S/S END FITTINGS
- 3 PLY FIBRE REINFORCED INTERNAL RUBBER HOSE
- HIGH QUALITY, HARD WEARING AND ROBUST HOSE.

SPRAY VALVE & HANDLE:
- CHROME PLATED BRASS with INSULATED BLACK HANDLE
- FLAT CHROME PLATED METAL SQUEEZE LEVER WITH INSULATION COVERING & FLAT WIDE STOPPER.
- SQUEEZE LEVER IS CONSTANT IN MAINTAINING OF IT'S POSITION.
- QUICK RELEASE ON/OFF CLIP ON SQUEEZE LEVER FOR SAFETY.
- 15 DEGREE FLAT HIGH PRESSURE SPRAY FOR BEST CLEANING.

ADDITIONAL SPRAY VALVE
- LOW ENERGY CONSUMPTION = **HIGH $ SAVINGS**
- LOW WATER CONSUMPTION = **HIGH $ SAVINGS**
- ENGINEERED TO OUT PERFORM MOST OTHER BRANDS
- EXTREMELY ROBUST - ENGINEERED TO LAST
- End User Friendly = less Hand Stress
- INTERCHANGEABLE WITH MOST SIMILAR BRANDS AT HANDLE (fits into 3/4"unf female handle)

WALL BRACKET:
- S/S Threaded ROD ADJUSTS FROM 50mm - 220mm
- 3 SCREW HOLE BACK PLATE FOR EASY FIXING TO STUDS
- Adjustable Angle

WELS

SPOUT = 3.5 STAR, 9lpm **SPRAY** = 6 STAR, 3.5lpm

WATERMARK & WELS:
Global Tapware Pty Ltd is a Watermarked, level 1 & 2, Company.
All relevant products & components are WELS registered.

Special Notice:
1-We reserve the right to make changes to products and drawings without notice.
2- All drawings & documents are subject to copyright (c).
3- Seek written consent by us to reprint/use other than in specification work.

'GLOBAL FISHER' Series PT No.: **GF032512 + Other Sizes**

PRE RINSE + ADD ON POT FILLER