Excellence since 1976

JS007
INSTALLATION INSTRUCTIONS

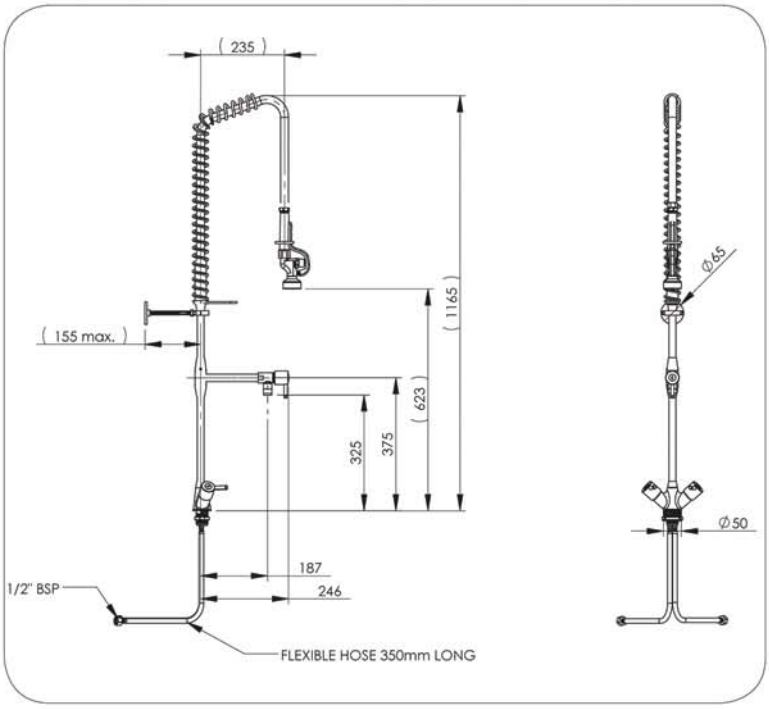

Technical Information

Inlet connection (hot & cold)	1/2" BSP
Recommended pressure	100kPa (min) -500kPa (max)
Flow rate (pot filler aerator)	8 l/min
Operating temperature range ceramic disc	0-75°C

1. INSTALLATION INSTRUCTIONS

1. Unpack and layout all the pre rinse assembly parts. The box marked with a red label contains the pot filler, and the box marked with a blue label contains the spray gun.

2. Connect the flexible hoses to the mixer body. The hose with red markings to be connected to hot inlet, and the hose with blue markings to be connected to cold inlet. (Figure 1)

3. Install the mixer body onto the bench top by locating the pre-drilled hole in the bench. Feed the flexible hoses individually through the pre-drilled hole. Check that the sealing o-ring is presented at the base of the mixer body. Place the locking ring underneath the bench, tighten it until the body is lock in place. Alternatively, you may use the screws to lock the unit in place.

4. The O-Rings on the riser spigot are pre-greased. Please re-grease them if required. (Figure 2)

Figure 1

Figure 2

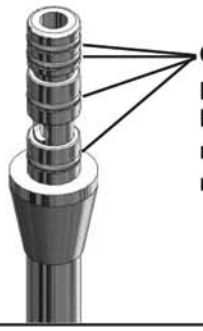

FSM (FOOD SERVICE MACHINERY PTY. LTD.)
HEAD OFFICE: UNIT E6, 63-85 TURNER STREET, PORT MELBOURNE, VIC. 3207 AUSTRALIA
T: +61 3 8645 2555 F: +61 3 8645 2565
E: sales@fsm-pl.com.au W: www.fsm-pl.com.au

SYDNEY OFFICE:
UNIT 26, 7-9 PERCY STREET, AUBURN, NSW 2144 AUSTRALIA
T: +61 2 8737 4666 F: +61 2 8737 4646
E: sales@fsm-pl.com.au W: www.fsm-pl.com.au

QUEENSLAND:
T: 0400 099 992
E: sales @fsm-pl.com.au
W: www.fsm-pl.com.au

1. INSTALLATION INSTRUCTIONS (CONT'D)

5. Place the 2 white plastic washers as indicated, assemble the pot filler onto the riser. (Figure 3)

6. Assemble the top riser onto the unit. Then use 2 grub screws provided to lock the unit in place. Check to make sure the pot filler can rotate, if it is too tight, loosen up the grub screws slightly. (Figure 4)

7. Pull down the spring retainer (located inside the spring), fit the spring retainer onto the top riser spigot. The o-ring on the top riser spigot has been pre-greased, re-grease if required. The use 2 grub screws provided to lock the unit in place. Do not over tighten it as the unit will need to rotate. (Figure 5)

8. Position the hook (near the spring) so it facing forward.

9. Assemble the trigger spray gun onto the hose, use a thread sealant tape to seal the thread connection.

10. Unscrew the front section of the wall bracket, then place the back section of the bracket between the unit and the wall. Position the bracket as high up as possible. Trim and adjust the threaded rod to suit wall position. When trimming / adjusting, please make sure there is enough threads going into the wall flange and the bracket. (Figure 6)

11. Make holes on wall to suit the wall bracket and screw it in place. Assemble the front section of the wall bracket onto the rest of the wall bracket assembly. (Figure 6)

12. Ensure that the entire mixer unit is turned off, including the spray gun. Then connect the 2 flexible hoses to the water inlets using separate isolation valve.

13. Turn on the water supply and check for leaks at the inlet connection. Then check for leaks at all connection points including the mixer body, pot filler assembly, riser assembly, spring retainer assembly, hose and the spray gun.

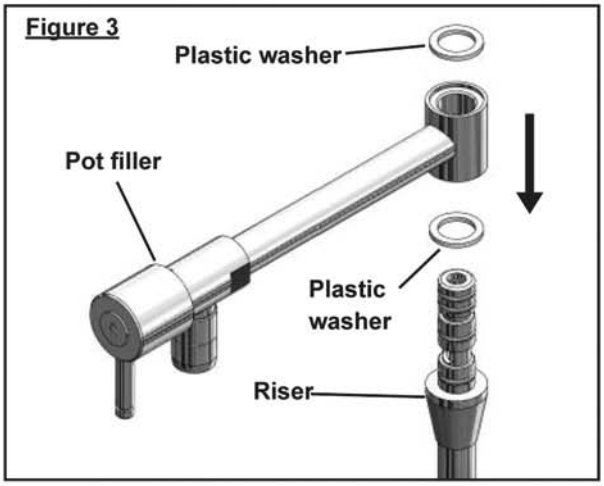

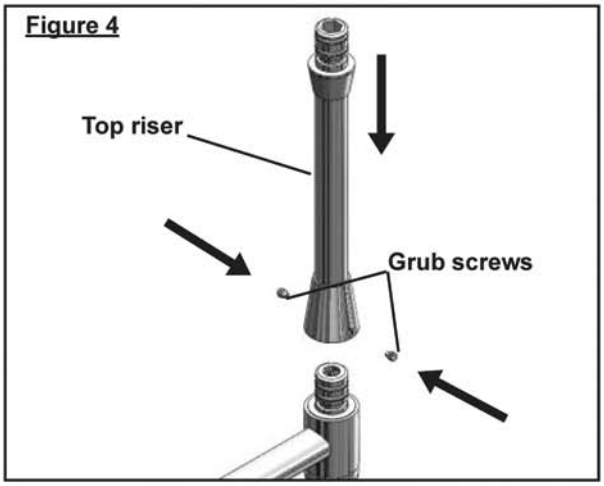

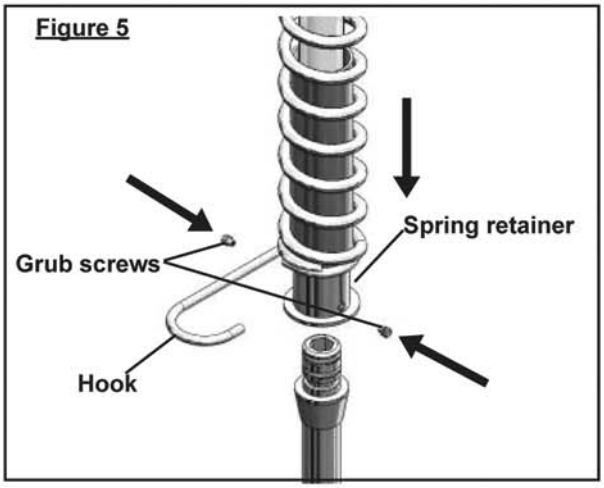

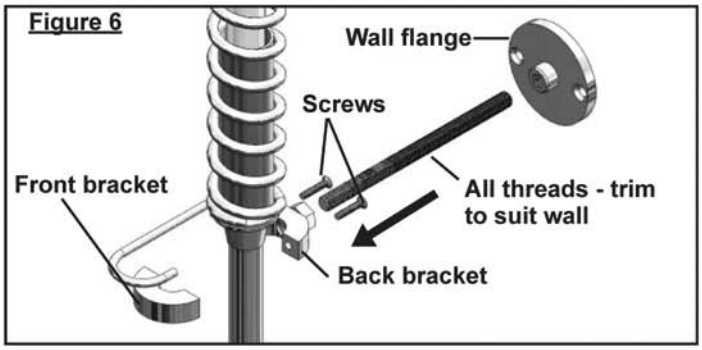

2. OPERATION

WARNING: Levers require minimum force to be turned on and off. Excessive force and heavy use may result in valve becoming loose from the body, or the ceramic disk valve being damaged. Both will resulting in uncontrolled water flow.

When operating the unit with hot water, please be careful as to avoid scalding, especially when using the trigger spray gun and the pot filler. Please note that exposed metal components including the riser, mixer body and hose connections may become hot when in use, which may cause burn injuries.

When the unit is not in use, please ensure all taps to the pre rinse assembly are turned off as this will maintain pressure to the hose and the trigger spray gun. In an unlikely event, the hose or the spray gun may malfunction and resulted in water damages to the premise. (i.e. flooding).

3. SERVICE & MAINTENANCE

It is recommended that the trigger spray gun should be serviced periodically. The service interval will depend on the usage of the product, water quality and general environment.

The top assemblies on the unit should be serviced occasionally and check for tightness into the mixer body / pot filler body.

Visual inspection on all connections should be performed occasionally Connections such as the inlet connections, hose connection to the spray gun, connection between the pot filler, wall brackets and riser etc should be checked and tightened if required.

3.1 SERVICING THE TRIGGER SPRAY GUN:

1. Use a screw driver to unscrew the handle, then remove the handle from the trigger spray gun body.

2. Use a spanner or a shifter to remove the cover dome and red fibre washer from the stuffing box assembly (SBA). Clean the inside of the cover dome. Remove all scales, greases and other residues. (Figure 7)

3. Grease the inside of the dome lightly.

4. Remove the piston from the SBA, clean any residues and scales from the spindle and button, be careful not to damage the o-rings. (Figure 7)

5. Re-grease the piston o-rings and push the piston back into the SBA.

6. Press the piston to check for water flow. Check for water leaks around the piston, and make sure water can flow / stop flowing when the piston is pushed down or popped back up.
7. Assemble the red fibre washer & cover dome over the SBA. Then secure the handle back into the spray gun body via a screw.

8. Test the trigger spray gun again for correct operation.

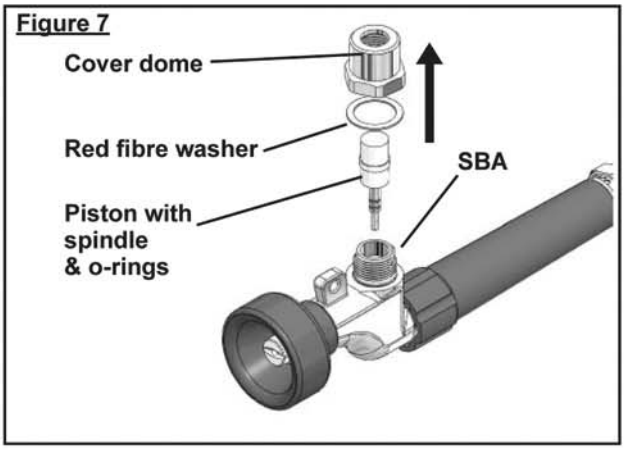

Excellence since 1976

3. SERVICE & MAINTENANCE

3.2 TROUBLESHOOTING GUIDE:

Please refer to trouble shooting chart to help determine specific problems

PROBLEM	CAUSE	RECTIFICATION
Trigger spray gun does not turn off	Debris fouling the ball seating washer or the stainless steel ball	Dismantle the SBA from the gun, clean the washer and the stainless steel ball
	Seating washer is damaged	Replace seating washer
	Spring is damaged	Replace spring in SBA
	Piston jammed in open position	Remove dome and piston from the SBA, clean piston assembly and re-grease o-ring
No water flow from the trigger spray gun	Water supply is turned off	Turn on water supply
	Debris fouling inlet or outlet ports of SBA	Remove SBA and clean to remove blockage
	Debris fouling the spray nozzle	Remove blockage at the spray nozzle
	Seating o-ring is damaged	Remove SBA and replace o-ring
	Debris fouling non-return valve	Remove non-return valve in the bottom riser, clean or replace if required
Water discharge from the top of the spray gun dome	Piston o-rings is worn	Remove cover dome and replace o-rings on the piston. Re-grease then reassemble
Water leak near the hose connection, the trigger spray gun or spring retainer	Hose has been loosened from the spray gun connection	Re-apply thread sealant tape on the male thread of the spray gun, tighten it to the hose connection
	Hose has been loosened from the spring retainer	Re-tighten the hose at the spring retainer connection
	O-Rings inside the spring retainer are worn out	Remove the spring retainer, replace the o-rings on the top riser. Re-grease before reassembly
	Hose is damaged	Replace hose
Taps do not turn off	Top assemblies are loosened from the mixer body / port filler body	Remove the tap handles & the SBA, replace SBA fibre washer and re-tighten the SBA back onto the mixer body / pot filler body
	Ceramic disk spindle is damaged	Remove and replace spindle
Water leaking at the inlet hose connections	The hoses are loosened at the bottom of the mixer body	Re-tighten the hose
	The hoses or the o-ring seals are damaged	Replace the hose
Water leaking around the pot filler	The O-rings inside the bottom riser are worn	Remove the grub screws between the pot filler and the top riser. Then remove the pot filler and replace the o-rings inside. Re-grease them before re-assembly

3.3 CARE & MAINTENANCE:

This product should be cleaned with a soft, damp cloth using only mild liquid detergent or soap and water. Do not use cleaning agents that contain a corrosive acid, scouring agent or solvent chemicals. Do not use cream cleaners as they are abrasive. Epoxy coated surface finish should only be cleaned with a cloth and clear water or mild detergent. The use of unsuitable cleaning agents may damage the surface of the product. Any damage caused in this way will not be covered by warranty.

When re-greasing spindle, always use a silicon based potable water approved lubricant such as Hydroseal Food Pro.

FOR ALL SERVICE AND WARRANTY REQUIREMENTS, CALL FSM (03) 8645 2555