PERFORMER MEAT AND DELI

KEY FEATURES

Double glazed glasses | Front glass with pistons assisted opening system | Innovative design of ceiling profile | Evaporator pistons assisted lift up for cleaning | Squared corner display unit | Humidity control | Perfect visibility of displayed products by any side | Automatic electric defrost | LED lighting

COLORS

RAL	SILVER	PANNA	CIOCCO	AZZURRO	LIMONE	LIME	AMARENA	PESCA
RAL	SILVER	RAL 90 0	RAL 8014	PANTONE 285	PANTONE 394	PANTONE 383	PANTONE 233	PANTONE 165

FEATURES

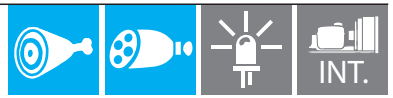

Under tank in zinc coated steel | adjustable S/S feet | Ecological polyurethane insulation| ventilated refrigeration | display surface in S/S BA (available also epoxy Black painted) |LED lighting |Double glazed glasses | Front glass with lift up piston assisted opening system | Plexy sliding doors or self-rolling night blind (optional) on the operator side | Digital control board

PERFORMER

Design & Tecnologia su misura

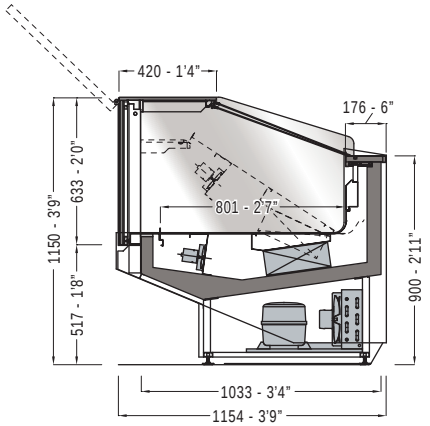

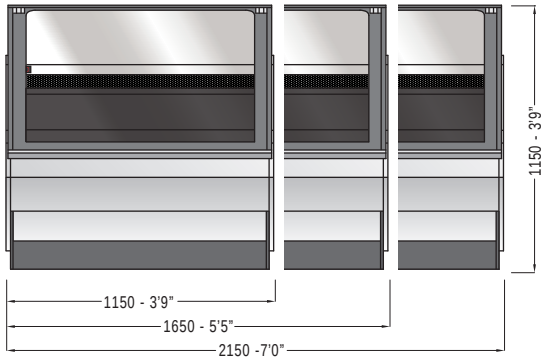

MEAT AND DELI

TECHNICAL FEATURE		VERSIONS			
		1150	1650	2150	ANG. AP 90°
External dimensions (L-D-H)	inches mm	45 ¼ - 45 ½ - 45 ¼ 1150 - 1154 - 1150	65 - 45 ½ - 45 ¼ 1650 - 1154 - 1150	84 ⅝ - 45 ½ - 45 ¼ 2150 - 1154 - 1150	63 ⅞ - 63 ⅞ - 45 ¼ 1624 - 1624 - 1150
Crated dimensions (L-D-H)	inches mm	53 ⅞ - 53 ⅞ - 55 ⅛ 1370 - 1370 - 1400	73 ⅝ - 53 ⅞ - 55 ⅛ 1870 - 1370 - 1400	93 ¼ - 53 ⅞ - 55 ⅛ 2370 - 1370 - 1400	73 ⅝ - 73 ⅞ - 55 ⅛ 1870 - 1870 - 1400
Refrigeration	Type	Ventilated	Ventilated	Ventilated	Ventilated
Refrigerated display area	Type	Deck	Deck	Deck	Deck
Operating temperature	°C / °F	0÷2 / 32÷35	0÷2 / 32÷35	0÷2 / 32÷35	0÷2 / 32÷35
Compressor	nr. / Type	1 / hermetic	1 / hermetic	1 / hermetic	1 / hermetic
Cooling power *	(W)	510	670	890	940
Electric supply	(V/ph/Hz)	230/1/50 (UE) 120/1/60 (USA)	230/1/50 (UE) 120/1/60 (USA)	230/1/50 (UE) 120/1/60 (USA)	230/1/50 (UE) 120/1/60 (USA)
Power consumption	(W/A)	600/4,5	800/5,5	1200/8,0	1300/8,5
Defrost	Mode / type	electric	electric	electric	electric
Climatic class	N°/°C/F°/H.R.	3/25/77/60%	3/25/77/60%	3/25/77/60%	3/25/77/60%
Refrigerant Gas	Type	R404A	R404A	R404A	R404A
Net weight	Kg / Lb	200/440	290/639	330/727	340/749
Crated weight	Kg / Lb	305/672	435/959	510/1124	535/1179

CORNER CASE TOP VIEW

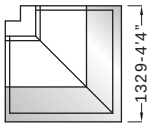

STANDARD FEATURE

- Double glazing lift-up front glass
- Double glazing sides
- Lift-up deck and evaporator to allow the perfect cleaning of the tank
- LED lighting
- Plexiglass sliding doors
- Internal condensing unit

OPTIONAL

- Bumper addition
- Rolling curtain
- Paper holder
- Pull-out faucet inside the tank
- Castors instead of feet
- Cutting board with knives pocket
- Scale holder
- External condensing unit
- Intermediate shelf

* At -10°C of expansion

The company reserves the right to make modifications to the products without prior notice.

CIAM s.p.a. | Viale dei Pini 9 | 06081 | Petrignano di Assisi | PG - Italy | Tel: 0039 07580161
web: www.ciamweb.it | mail: info@ciamgroup.it

2016 / v1.0

Design & Tecnologia su misura