PERFORMER FROZEN

KEY FEATURES

Double glazed glasses | Front glass with pistons assisted opening system | Innovative design of ceiling profile | Evaporator pistons assisted lift up for cleaning | Squared corner display unit | Perfect visibility of displayed products by any side | Low temp version (-22°C) | Automatic electric defrost | Reverse cycle defrost | LED lighting

COLORS

RAL	SILVER	PANNA	CHOCHO	AZZURRO	LIMONE	LIME	AMARENA	PESCA
RAL	SILVER	RAL 9010	RAL 8014	PANTONE 285	PANTONE 394	PANTONE 383	PANTONE 233	PANTONE 165

FEATURES

PERFORMER

Under tank in zinc coated steel | adjustable S/S feet | Ecological polyurethane insulation| ventilated refrigeration | display surface in S/S BA (available also epoxy Black painted) |LED lighting |Double glazed glasses | Front glass with lift up piston assisted opening system | Plexy sliding doors or self-rolling night blind (optional) on the operator side | Digital control board

Design & Tecnologia su misura

PERFORMER FROZEN

SECTIONS AND MODELS

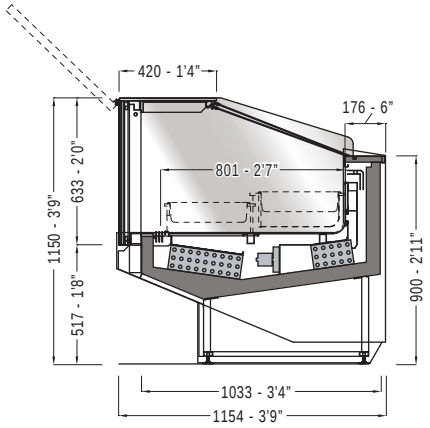

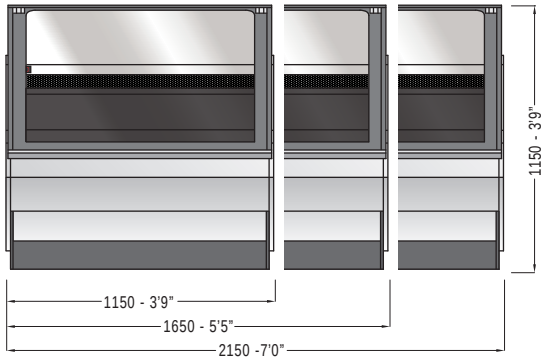

FROZEN

TECHNICAL FEATURE		VERSIONS		
		1150	1650	2150
External dimensions (L-D-H)	inches mm	45 ¼ - 45 ½ - 45 ¼ 1150 - 1154 - 1150	65 - 45 ½ - 45 ¼ 1650 - 1154 - 1150	84 ⅝ - 45 ½ - 45 ¼ 2150 - 1154 - 1150
Crated dimensions (L-D-H)	inches mm	53 ⅞ - 53 ⅞ - 55 ⅛ 1370 - 1370 - 1400	73 ⅝ - 53 ⅞ - 55 ⅛ 1870 - 1370 - 1400	93 ¼ - 53 ⅞ - 55 ⅛ 2370 - 1370 - 1400
Refrigeration	Type	Ventilated	Ventilated	Ventilated
Refrigerated display area	Type	Deck	Deck	Deck
Operating temperature	°C / °F	0÷2 / 32÷35	0÷2 / 32÷35	0÷2 / 32÷35
Compressor	nr. / Type	1 / hermetic	1 / hermetic	1 / hermetic
Cooling power *	(W)	510	670	890
Electric supply	(V/ph/Hz)	230/1/50 (UE) 120/1/60 (USA)	230/1/50 (UE) 120/1/60 (USA)	230/1/50 (UE) 120/1/60 (USA)
Power consumption	(W/A)	600/4,5	800/5,5	1200/8,0
Defrost	Mode / type	electric	electric	electric
Climatic class	N°/°C/F°/H.R.	3/25/77/60%	3/25/77/60%	3/25/77/60%
Refrigerant Gas	Type	R404A	R404A	R404A
Net weight	Kg / Lb	200/440	290/639	330/727
Crated weight	Kg / Lb	305/672	435/959	510/1124

STANDARD FEATURE

- Double glazing lift-up front glass
- Double glazing sides
- Lift-up deck and evaporator to allow the perfect cleaning of the tank
- LED lighting
- Plexiglass sliding doors
- Internal condensing unit

OPTIONAL

- Bumper addition
- Rolling curtain
- Paper holder
- Pull-out faucet inside the tank
- Castors instead of feet
- Scale holder
- External condensing unit
- Intermediate shelf
- Plexiglass pans holder

* At -10°C of expansion

PERFORMER

The company reserves the right to make modifications to the products without prior notice.

CIAM s.p.a. | Viale dei Pini 9 | 06081 | Petrignano di Assisi | PG - Italy | Tel: 0039 07580161
web: www.ciamweb.it | mail: info@ciamgroup.it

2016 / v1.0

Design & Tecnologia su misura

PERFORMER FROZEN

KEY FEATURES

Double glazed glasses | Front glass with pistons assisted opening system | Innovative design of ceiling profile | Evaporator pistons assisted lift up for cleaning | Squared corner display unit | Perfect visibility of displayed products by any side | Low temp version (-22°C) | Automatic electric defrost | Reverse cycle defrost | LED lighting

COLORS

RAL	SILVER	PANNA	CHOCHO	AZZURRO	LIMONE	LIME	AMARENA	PESCA
RAL	SILVER	RAL 9010	RAL 8014	PANTONE 285	PANTONE 394	PANTONE 383	PANTONE 233	PANTONE 165

FEATURES

PERFORMER

Under tank in zinc coated steel | adjustable S/S feet | Ecological polyurethane insulation| ventilated refrigeration | display surface in S/S BA (available also epoxy Black painted) |LED lighting |Double glazed glasses | Front glass with lift up piston assisted opening system | Plexy sliding doors or self-rolling night blind (optional) on the operator side | Digital control board

Design & Tecnologia su misura

PERFORMER FROZEN

SECTIONS AND MODELS

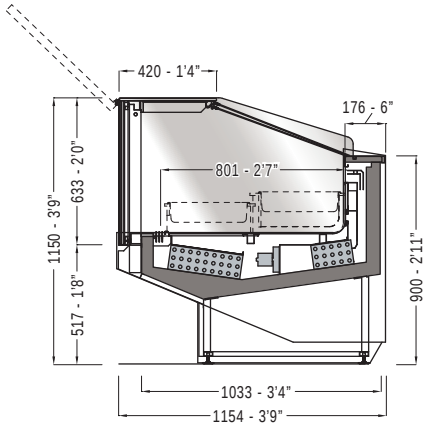

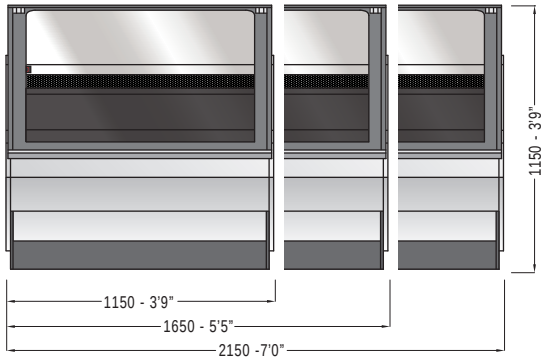

FROZEN

TECHNICAL FEATURE		VERSIONS		
		1150	1650	2150
External dimensions (L-D-H)	inches mm	45 ¼ - 45 ½ - 45 ¼ 1150 - 1154 - 1150	65 - 45 ½ - 45 ¼ 1650 - 1154 - 1150	84 ⅝ - 45 ½ - 45 ¼ 2150 - 1154 - 1150
Crated dimensions (L-D-H)	inches mm	53 ⅞ - 53 ⅞ - 55 ⅛ 1370 - 1370 - 1400	73 ⅝ - 53 ⅞ - 55 ⅛ 1870 - 1370 - 1400	93 ¼ - 53 ⅞ - 55 ⅛ 2370 - 1370 - 1400
Refrigeration	Type	Ventilated	Ventilated	Ventilated
Refrigerated display area	Type	Deck	Deck	Deck
Operating temperature	°C / °F	0÷2 / 32÷35	0÷2 / 32÷35	0÷2 / 32÷35
Compressor	nr. / Type	1 / hermetic	1 / hermetic	1 / hermetic
Cooling power *	(W)	510	670	890
Electric supply	(V/ph/Hz)	230/1/50 (UE) 120/1/60 (USA)	230/1/50 (UE) 120/1/60 (USA)	230/1/50 (UE) 120/1/60 (USA)
Power consumption	(W/A)	600/4,5	800/5,5	1200/8,0
Defrost	Mode / type	electric	electric	electric
Climatic class	N°/°C/F°/H.R.	3/25/77/60%	3/25/77/60%	3/25/77/60%
Refrigerant Gas	Type	R404A	R404A	R404A
Net weight	Kg / Lb	200/440	290/639	330/727
Crated weight	Kg / Lb	305/672	435/959	510/1124

STANDARD FEATURE

- Double glazing lift-up front glass
- Double glazing sides
- Lift-up deck and evaporator to allow the perfect cleaning of the tank
- LED lighting
- Plexiglass sliding doors
- Internal condensing unit

OPTIONAL

- Bumper addition
- Rolling curtain
- Paper holder
- Pull-out faucet inside the tank
- Castors instead of feet
- Scale holder
- External condensing unit
- Intermediate shelf
- Plexiglass pans holder

* At -10°C of expansion

PERFORMER

The company reserves the right to make modifications to the products without prior notice.

CIAM s.p.a. | Viale dei Pini 9 | 06081 | Petrignano di Assisi | PG - Italy | Tel: 0039 07580161
web: www.ciamweb.it | mail: info@ciamgroup.it

2016 / v1.0

Design & Tecnologia su misura