MYA GELATO

COLORS

RAL	SILVER	PANNA	CHOCHO	AZZURRO	LIMONE	LIME	AMARENA	PESCA
RAL	SILVER	RAL 9010	RAL 8014	PANTONE 285	PANTONE 394	PANTONE 383	PANTONE 233	PANTONE 165

FINISHING

OPTICAL | PIED DE POULE | WAVE

FEATURES

KEY FEATURES

- **Performances**: *double air flow refrigeration system*
- **Visibility**: *extraordinary enhancement of displayed products*
- **Practicality**: *pistons assisted front glass opening system*
- **Customizable**: *great possibility to customize front side panels*
- **Temperature controlled**: *-18°C / +4°C (-0 4°F / +41°F)*
- **Energy Saving**: *double LED lighting as standard*

MYA

MYA COLLECTION: CIAM's spearhead production. It is the perfect synthesis of PERFORMANCE, ERGONOMICS, ENERGY SAVING, DISPLAYED PRODUCT VISIBILITY. High performance maintains the product even in the worst ambient condition. D.A.F. Double Air Flow Refrigeration System / E.N.F.S. Extended No Fog System. You will be surprised by MYA's performance. MYA cabinets are tested in class 4+ (35°C / 70% HR): even in the worst ambient condition, MYA cabinets can ensure a perfect food preservation. Double Air Flow Refrigeration System permits to equalize the temperature above the display surface even with gelato exposed at "mountain" (Up to 15cm over the containers' level!). All the upper glass structure of MYA's cabinets is realized in double glazing, to avoid the fog even in high relative humidity conditions.

Design & Tecnologia su misura
CIAM®

MYA GELATO

SECTIONS AND MODELS

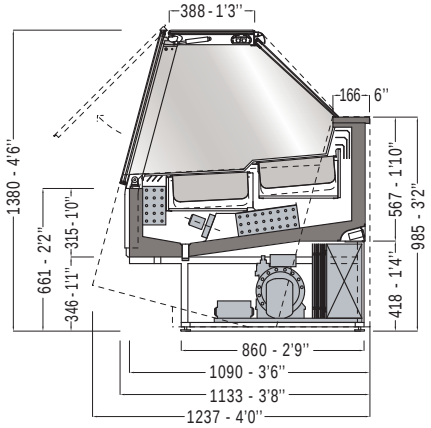

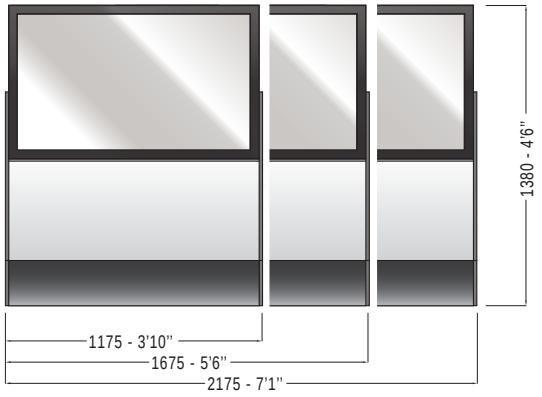

MYA 2 - GELATO

TECHNICAL FEATURE		VERSIONS			
		1150	1650	2150	2150 Double Temp.
External dimensions (L-D-H)	inches mm	46 ¼''- 48 ¾"- 54 ⅓" 1175 - 1237 - 1380	65 ½''- 48 ¾"- 54 ⅓" 1675 - 1237 - 1380	85 ⅔''- 48 ¾"- 54 ⅓" 2175 - 1237 - 1380	85 ⅔''- 48 ¾"- 54 ⅓" 2175 - 1237 - 1380
Crated dimensions (L-D-H)	inches mm	54 ⅓''- 58 ¼"- 63 ¾" 1380-1480-1620	74''- 58 ¼"- 63 ¾" 1880-1480-1620	93 ¾''- 58 ¼"- 63 ¾" 2380-1480-1620	93 ¾''- 58 ¼"- 63 ¾" 2380-1480-1620
Pans layout - 5,2 Lt mm.360x165x120h 14 ⅛" - 6 ½" - 4 ¾''	flavors nr. / configuration	12	18	24	24 (12+12)
Pans layout - 5,2 Lt mm.360x250x80h 14 ⅛" - 10" - 3 ⅛''	flavors nr. / configuration	8	12	16	16 (8+8)
Refrigeration	Type	Fan Ventilated	Fan Ventilated	Fan Ventilated	Fan Ventilated
Refrigerated display area	Type	Deck	Deck	Deck	Deck
Operating temperature	°C / °F	-18 /-0.4	-18 /-0.4	-18 /-0.4	-18 /-0.4
Compressor	nr. / Type	1 / semihermetic	1 / semihermetic	1 / semihermetic	2 / semihermetic
Cooling power *	(W)	800	1180	1490	830+830
Electric supply	(V/ph/Hz)	400/3/50 +N (UE) 230-208/3/60 (USA)	400/3/50 +N (UE) 230-208/3/60 (USA)	400/3/50 +N (UE) 230-208/3/60 (USA)	400/3/50 +N (UE) 230-208/3/60 (USA)
Power consumption	(W/A)	1860/4,3	2850/7,0	3400/7,8	3660/7,6
Defrost	Mode / type	reverse cycle	reverse cycle	reverse cycle	reverse cycle
Climatic class	N°/°C/F°/H.R.	4+/35/95/70%	4+/35/95/70%	4+/35/95/70%	4+/35/95/70%
Refrigerant Gas	Type	R404A	R404A	R404A	R404A
Net weight	Kg / Lb	290 / 639	360 / 793	460 / 1014	460 / 1014
Crated weight	Kg / Lb	415 / 914	535 / 1179	680 / 1499	680 / 1499

* At -36°C of expansion

STANDARD FEATURE

- Double LED lighting system
- Front, top and side double glasses
- Double air flow refrig. system
- Reverse cycle defrost system
- Semihermetic compressor

OPTIONAL

- S/s display trays for cakes
- Dual temperature switch (-18°C / +5°C) (-0.4F / +41°F)
- S/s pans dim. mm360x165x120h
- S/s pans dim. mm360x250x80h
- Night curtain self rolling
- Remote condensing unit
- Dipper well
- Cone holder
- Wheels kit

MYA

The company reserves the right to make modifications to the products without prior notice.

CIAM s.p.a. | Viale dei Pini 9 | 06081 | Petrignano di Assisi | PG - Italy | Tel: 0039 07580161
web: **www.ciamweb.it** | mail: info@ciamgroup.it

2013-10 / v1.0

Design & Tecnologia su misura