ITEM NO.	PART NUMBER	DESCRIPTIION	Rev	Drawing Number	QTY.
1	WCFS24SS-A002	Body	C	WCFS24SS-D002	1
2	WCFS24SS-A003	Gantry	D	WCFS24SS-D003	1
3	WCFS2xSS-CH-A001	Compressor Housing	C	WCFS2xSS-CH-D001	1

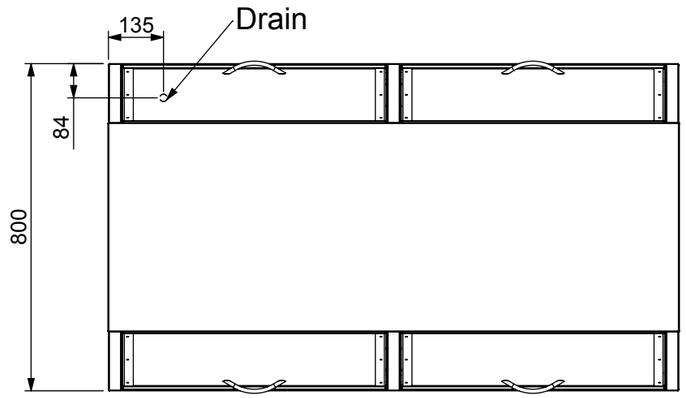

Product Details

Electrical Connection: 10A Plug & Lead (supplied)
Electrical Rating : 240V, 4.2A, 1000W
Waste : 20mm with drain hose attached
Unit Controls : Switch for main power
: Carel controller with digital readout

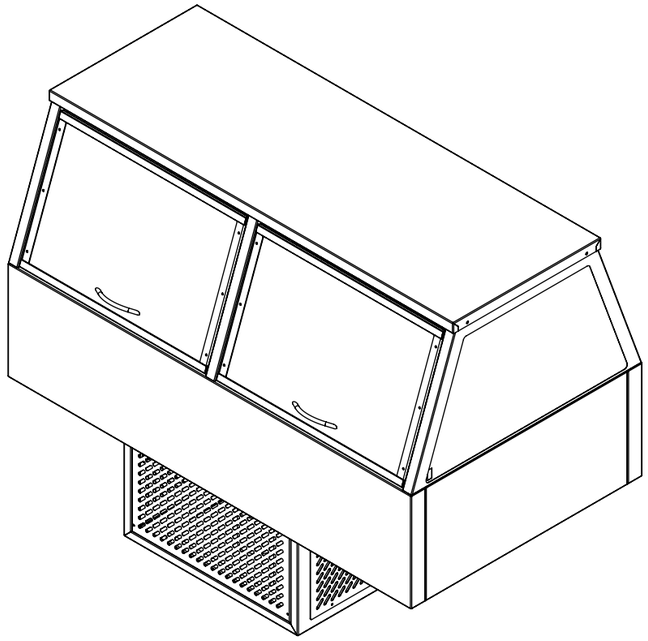

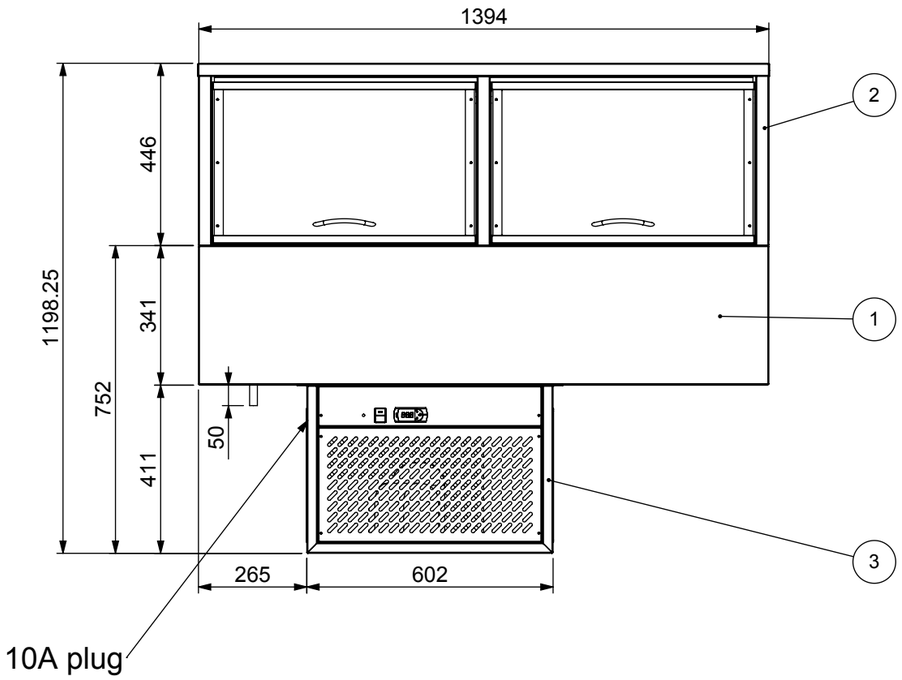

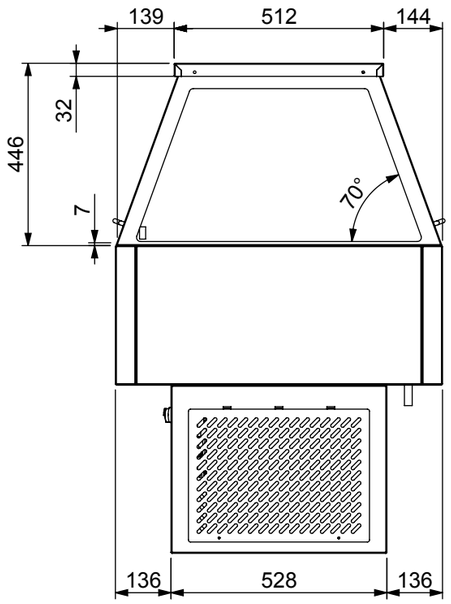

REV.	REVISED BY	DATE	REVISION DESCRIPTION	STATUS
D	M Sheehan	25/08/2010	Door opening system changed to nylon roller guides and channel	
C	C Booth	12/09/2006	End profile angle changed from 72° to 70°	

STODDART
MANUFACTURING
TOM STODDART Pty Ltd ACN 009 690 251
215 Jackson Rd Sunnybank Hills Qld 4109
PO Box 420 Sunnybank Qld 4109
Phone (617) 3344 2444 Fax (617) 3345 6403
Email sunnybank@stoddart.com.au
Quality in stainless steel

Woodson Self Serve Cold Food Bar

	NAME	SIGNATURE	DATE
DRAWN	C Booth		23/11/2004
APPV'D			

UNLESS OTHERWISE SPECIFIED: DIMENSIONS ARE IN MILLIMETERS

MATERIAL:
THICKNESS:
FINISH:
Weight:
Surface Area:

PART No: **WCFS24SS-A001**
DESCRIPTION:
DWG No: WCFS24SS-D001
Dwg. Issue 4

DO NOT SCALE DRAWING

This drawing remains the property of Tom Stoddart Pty Ltd & cannot be reproduced without prior permission.

A3 | Sheet 1 of 3

F:\08_Food Service Equipment\03_Engineering - FSE\01_Stoddart Standard Products\Woodson\WCFS2xSS Cold Food Display-Self Serve\01_Solidworks\WCFS24SS\