Instruction Manual

Cold Food Displays Self Serve

Models: WCFN23SS, WCFN24SS,

WCFN25SS, WCFN26SS

A guide to the use, care and maintenance
of your quality Woodson product

Manufactured by:
Tom Stoddart Pty Ltd
215 Jackson Road, Sunnybank Qld 4109
Ph: 07 3344 2444 (int +61 7 3344 2444)
Fax: 07 3345 6403 (int +61 7 3345 6403

Your New Woodson Product

Thank you for choosing this quality Woodson product. All our products are designed and made to meet the needs of food service professionals. By using, caring and maintaining your product according to these instructions, your Woodson product should give you many years of reliable service.

Woodson is a wholly Australian owned company, which has manufactured quality commercial catering equipment since 1954. All Woodson products are engineered and manufactured to give excellent results whilst offering-value-for-money, ease-of-use and reliability.

Woodson manufacture a comprehensive range of equipment for kitchens, food preparation and presentation. Our range includes toasters, griddles, food warmers, fryers, hot and cold food display cabinets and many other quality products.

For details of your nearest dealer contact our head office.

Woodson
PO Box 420 Sunnybank Qld 4109 Australia www.woodsonsales.com.au
Ph: 07 3344 2444 (int +61 7 33442444)
Ph: 1300 307 289
Fax: 07 3345 6403 (int +61 7 3345 6403) Email: fse@stoddart.com.au

Contents

Compliance…… 2
General Precautions……..…… 2
Contents & Packaging …….... 3
Installation …….. 3
Operating Instructions …….. 4
Maintenance & Cleaning …….. 5
Intended Use Guidelines ……. 6
Specifications ……. 5
Safety …….. 7
Appendix 1 – Australian Warranty and Importer/Distributor Contact Details 8 – 11

Issue 01.11.2012
Ref: WCFN_MAN01-11-2012

Compliance

At the time of manufacture Woodson products are designed and manufactured to comply with all relevant Australian Standards.

General precautions (all products)

Every person who is to operate this machine must read this manual or obtain suitable training prior to use.

Hot Equipment: These machines include heating elements. As with any commercial heating appliance the surfaces of this unit will get hot. Do not touch the surfaces of the machine whilst it is in use. Be careful when operating near other machinery. If your machine is in an area where unwary customers or staff can touch the unit you should provide additional warning signage if necessary. To avoid unnecessary risks keep this unit out of reach of children.
These products are designed for the display of hot food. Stoddart Manufacturing cannot guarantee its performance or honour the warranty if used outside its original purpose.

Cold Food Displays: The machine includes refrigeration components. As with any commercial refrigeration appliance it can get very cold. Remember cold surfaces can burn – do not touch these surfaces when the unit is fully refrigerated. Be careful when operating near machinery.
This product is designed for display of previously refrigerated product to 4deg C of lower. Woodson cannot guarantee its performance or honour the warranty if used outside its original purpose.

Do not operate the machine in any areas where the electrical components may come into direct contact with water.

Always ensure the power cable is not in contact with hot parts of the machine when in use and have any damaged power cords replaced immediately.

Stoddart Manufacturing will not accept liability if:

- The instructions in this manual have not been followed properly
- Non-authorised personnel (persons not nominated by Woodson) have tampered with the machine
- Non-original spare parts are used
- The machine is not cleaned according to the instructions in this book
- There is any physical damage to the machine

Contents and packaging

Woodson pack your product to limit any possible damage caused as a result of transportation. Please unwrap the box carefully, and do not discard any packaging without checking to ensure you have the following items:

a) One cold food display
b) Acrylic night lids to suit model size
c) Combination of pots as ordered (if applicable)

Should any item have physical damage, report the details to the freight company and to the agent responsible for the despatch within seven (7) days of receipt. No claims will be accepted or processed after this period.

If the unit you are supplied has a gantry, this has not been fitted by Stoddart Manufacturing. The unit is designed to be used with acrylic night lids or sliding doors, if these were not supplied to you please contact the supplier of your unit, not Stoddart Manufacturing. Without lids or doors Stoddart Manufacturing cannot honour warranty.

Installation

Remove all packing, plastic coating and tape from the stainless steel before installing the unit. Clean off any remaining glue residue from the exterior of the unit with warm soapy water (refer to cleaning instructions on page 5).

If installing into a bench, place the machine on a supporting framework that takes the full weight of the body.

Cross flow ventilation from left to right along the longest side of the unit is required if mounted inside a fixed or mobile cabinet. A perforated area equal to or greater than the flat panels on the LHS and RHS of the compressor compartment is required

Ideally the front of the unit should receive air via a ventilation grille if there is a solid structure in front of it.

Do not position the machine in a wet area or near flammable substances.

Run the flexible drain pipes to the closest drain point or suitable container.

Please consult national and local standards to ensure that your machine is positioned in accordance with any existing requirement.

Plug the cold food display into a standard single phase 10 AMP power point.

Operating Instruction

- The unit is designed to be ALWAYS run with GN pans in it. The unit will not work correctly with no GN pans in it. Stoddart Manufacturing will not cover problems arising from the non use of pans under warranty
- To cool the unit down ready for use, fill the body up with pans, place acrylic night lids on and switch the unit on
- Product should not protrude above the pan line into the air flow. Failure to follow this loading instruction will decrease unit performance and Stoddart Manufacturing will not cover problems arising from this under warranty
- Product going into the unit must be cooled down to 4 dg C or lower before being placed into the unit
- The unit is designed to run with a maximum of 3 hours with night lids removed Stoddart Manufacturing will not cover problems arising from running the unit in any manner other than this under warranty
- The unit is required to be switched off for at least 2 hrs within any 24hr period. The unit needs to be allowed to defrost and wiped clean during this time
- The unit is not designed to be used as a refrigerator, no product is to be stored in the unit for an extended period of time.
- The unit is not designed to cool product above 4 deg C down to below 4 deg C
- The thermostat is pre-set for correct operating temperature. A preset defrost is included to clear the coil of ice every 4 hours.
- If you are draining the water into a container ensure it is emptied on a regular basis. Check the drain for blockages and ensure it is draining properly and not backing up into the unit.
- The unit is set to run at 2 or 3 deg out of the box, if you need to make the unit run colder or hotter, hold in the set button for 2 seconds and the set point temperature should flash, use the arrow button to change to the required temperature (we suggest increments of 0.5 degrees) and then press the set button once to store the temperature.
- If the unit you are supplied has a gantry this has not been fitted by Stoddart Manufacturing. The unit is designed to run with acrylic night lids or sliding doors, if you did not receive these please contact the supplier of the unit, NOT Stoddart Manufacturing. Without lids or doors Stoddart Manufacturing cannot cover warranty

Maintenance and Cleaning

Maintenance

- Clean the unit with a soft sponge and warm soapy water
- To clean the cold plate, ensure the machine is switched off and wash with warm water
- Clean the refrigeration condenser coil with a brush periodically

Cleaning

Whilst stainless steel is a very hardy and long lasting material, it must be cleaned regularly and according to the instructions below to prevent deterioration.
Always make sure the product is disconnected from the power source and has completely cooled down prior to cleaning.

- Wipe the external surfaces down with warm soapy water using a damp sponge or cloth.
- Do not immerse the unit in water or allow the ingress of water into the interior of the machine or any electrical components.

Note: Some cleaning agents can damage stainless steel. For this reason we recommend cleaning with soapy water. Woodson do not take any responsibility for damage caused by the use of inappropriate cleaning agents.
In some areas, particularly seaside environments, stainless steel can be subject to surface discolouration or “tea staining”. This can be removed with an appropriate cleaning agent which contains 10% sodium citrate. Ask your supplier of cleaning chemicals for a suitable brand.

Specifications

Model	WCFN23SS	WCFN24SS	WCFN25SS	WCFN26SS
Power source	240 Volts AC	240 Volts AC	240 Volts AC	240 Volts AC
Power consumption	1130 Watts	1300 Watts	1550 Watts	1600 Watts
Amps	4.7 Amps	5.5 Amps	6.6 Amps	6.8 Amps

Intended Use Guidelines

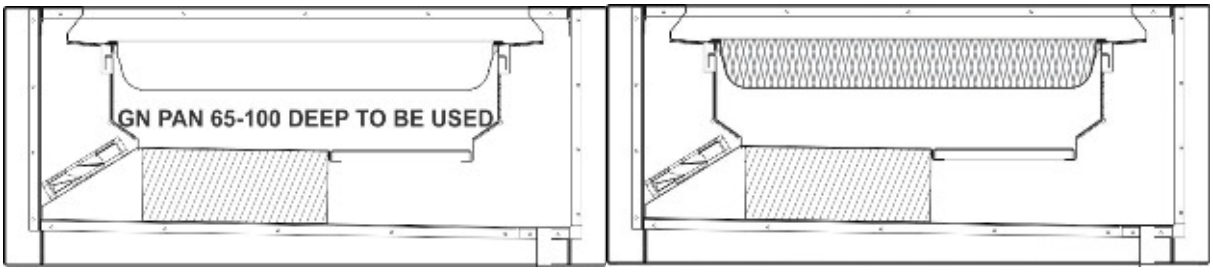

GN pans must always be used, product not to exceed top of pan

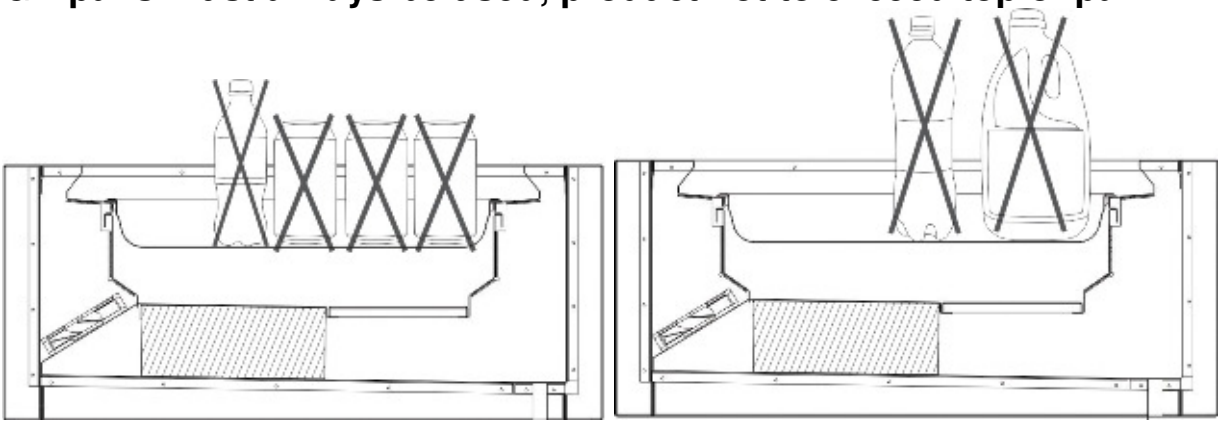

Not designed for cooling cans or bottles of any height

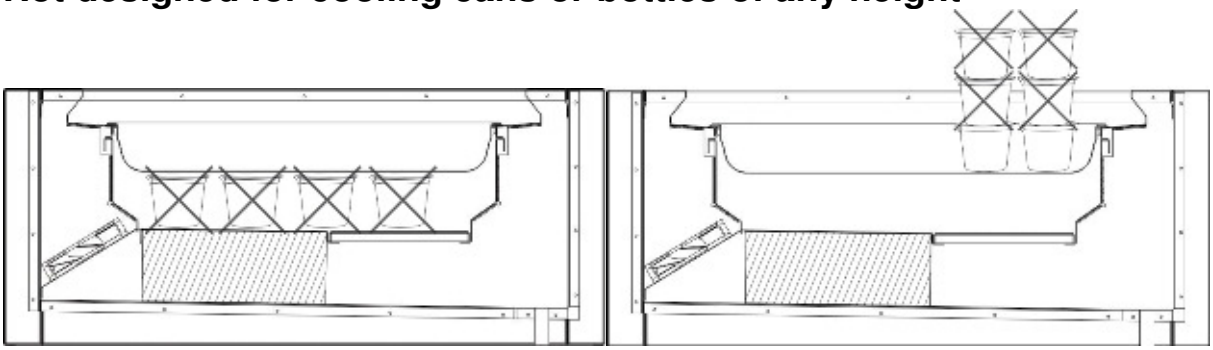

Product must be below 4 deg C before being placed in pans.

No product stored or cooled under pan or stacked above pan height.

Maximum 3 hrs without acrylic lids, lids must be on for 1 hr before being removed again.

The storing, stacking or attempted cooling of any products outside these guidelines will void your warranty.

Safety

All Woodson products are manufactured and tested according to relevant national and regional standards. All products comply to our test requirements.

This machine contains no user serviceable parts.

Only Stoddart, one of our accredited service agents, or a similarly qualified and licensed person(s) should carry out any repairs. Do not attempt to remove any cover panels, open the machine or access any internal parts.

The stainless steel manufacturing process used in the construction of this machine may result in sharp edges. We take every effort to remove any such edges, however be careful when contacting any raw edges of the product.

Do NOT use this appliance for other than its intended use.

Under no circumstances should the unit be immersed in water or sprayed with a hose to clean out. Do not allow any electrical components including cables and plugs to come into contact with water.

If the electrical cables, plug or other connections show any signs of physical damage or wear do not use the machine. In such instances contact Stoddart Manufacturing for details of your local repair agents (see page 1). We also recommend regular testing of machine by a trained and qualified technician to ensure it is working effectively and safely.

Appendix 1 – Australian Warranty and Importer/Distributor Contact Details

As the exclusive manufacturer and distributor of Woodson products in Australia, Stoddart Manufacturing (Stoddart) would like to congratulate you on your purchase of a Woodson product.

It should be noted by users of the product that it is not designed for household or domestic use and should not be used for this purpose.

This product is intended for commercial use, and in line with Australian electrical safety standards the following warnings are provided:

- This product is not intended for use by persons (including children) with reduced physical, sensory or mental capabilities, or lack of experience and knowledge, unless they have been given supervision or instruction concerning the use of the product by a person responsible for their safety. Children should be supervised to ensure that they do not play with the product.
- Users should also note that if the supply electricity cord is damaged in any way it should be replaced. Please contact Stoddart for parts and we will advise how to do this in order to avoid any electrical hazard.

Australian Warranty Policy & Procedure
Stoddart is committed to providing a comprehensive and fair warranty for all of its equipment. The warranty incorporates a commercial manufacturers' warranty, together with the consumer warranty provisions of the National Consumer Protection Act (2009).

1. Commercial Warranty

1.1 Stoddart warrants to the original purchaser ("**Customer**") of equipment manufactured or distributed by Stoddart that for **12 months** from the date of installation of the equipment by Customer (the "**Warranty Period**"), any defect in workmanship or material will, subject to clauses 1.2 and 3, be:

a) Repaired without charge; or
b) In respect of any **Major Failure** which cannot be repaired, replaced or the purchase money refunded.

1.2 Stoddart will not be liable for any associated loss, damage or compensation claim resulting from any defect in workmanship or material, and such liability is expressly excluded from the operation of clause 1.1.

2. Consumer Warranty

2.1 Subject to clause 3, equipment supplied by Stoddart to Customer for personal, domestic or household use or consumption comes with guarantees that cannot be excluded under the Australian Consumer Law. Customer is entitled to a replacement or refund for a **Major Failure** and compensation for any other reasonably foreseeable loss or damage. Customer is entitled to have the

equipment repaired, or replaced if the equipment fails to be of an **Acceptable Quality** and that failure does not amount to a Major Failure.

3. Warranty Clarification

3.1 Customer acknowledges and agrees:

(i) A **Major Failure** occurs when the equipment suffers repeated and/or unexpected failure that cannot be repaired to Stoddart's satisfaction (acting reasonably) or which Stoddart considers (acting reasonably) renders the equipment unsafe or inoperable;

(ii) Stoddart can only warrant the equipment will be of an **Acceptable Quality** when Customer uses the equipment in accordance with Stoddart's manufacturer's instructions or user manual ("**Instructions**"). Acceptable Quality does not imply a lifetime guarantee for the equipment;

(iii) Certain components have a finite expected life, especially in a commercial or high-use environment. For example components such as refrigeration compressors, elements, thermostats/simmerstats, switches, fans, and temperature controllers can be expected to last up to **12 months** when used in accordance with the instructions;

(iv) In a commercial environment, components such as lamps, fluorescent tubes, light bulbs, glass, silicone seals, gaskets and plastic components will require regular replacement. This is not covered by warranty and is at Customer's cost.;

(v) The life of equipment may be adversely affected by misuse, neglect, unauthorised alteration, incorrect installation, power surges, accident, use of inappropriate chemicals, flooding, and acts of God;

(vi) Proper maintenance and cleaning of equipment in accordance with the Instructions is essential to the equipment's effective operation;

(vii) On site warranty services are limited to sites within 50km from the nearest Stoddart authorised service agent and service agent's reasonable travel costs must be paid by Customer prior to the commencement of the repairs;

(viii) Additional labour costs will apply for service outside standard business hours of 8.00am to 4:30pm, Monday to Friday and on public holidays;

(ix) Stoddart cannot guarantee the performance of equipment made specifically to Customer's design or specifications. Stoddart will, where reasonably possible, draw any issues arising from Customer's design or specifications to Customer's attention during the commissioning and/or manufacturing process; and

(x) Customer must pay additional costs incurred by Stoddart as a result of Customer failing to provide suitable access to the equipment for inspection and service.

3.2 Stoddart's warranty liability under clauses 1 and 2 of these Terms exclude or do not cover:

a) The matters acknowledged by Customer in clause 3.1;

b) Situations where Stoddart is not satisfied (acting reasonably) the equipment or any part of the equipment has been used in accordance with the Instructions including misuse, neglect, unauthorised alteration, incorrect installation, power surges, accident, use of inappropriate chemicals, flooding, fire or act of God;

c) Any consequential loss, damage or expense arising directly or indirectly from use of the equipment otherwise than in accordance with the Instructions;

d) Any damage or malfunction arising from, or relating to, Customer's failure to properly maintain or clean the equipment in accordance with the Instructions;
e) Damage caused to equipment during transportation, which is outside Stoddart's standard delivery conditions.
f) Breakage or replacement of lamps, fluorescent tubes, light bulbs, glass, silicone seals, gaskets and plastic components.;
g) Maintenance, repair or other works not undertaken by a Stoddart authorised service agent
h) Where remote refrigeration is connected by a person other than Stoddart to equipment produced by Stoddart, Stoddart cannot accept claims for repair of TX valves and control components, as the fault may arise from the installation of the remote refrigeration lines, equipment, and gas, by a party over which Stoddart has no control.
i) Transportation costs associated with transporting the equipment to a Stoddart authorised service agent where Stoddart considers (acting reasonably) that repairs cannot be undertaken on-site; and
j) Unless agreed to by Stoddart in writing to the contrary, warranty is not included in the sale price for goods sold to or installed in an overseas location.

4. Warranty Claim Procedure

The following procedure must be followed to claim under Stoddart's warranties:

a) Refer to the trouble-shooting section of the Instructions to establish the nature of the fault. Check the equipment is plugged-in, turned-on or has no other valid reason for not operating.
b) If step (a) does not overcome the issue, you should report the fault with the equipment to our service department (phone 1300 307 289 or fax 07 3344 6166). Our service department will assist you with further trouble-shooting. If our service department is unable to resolve the fault with the equipment they will request you complete a Stoddart Warranty Request Form and fax (fax 07 3344 6166) or email (service@stoddart.com.au) it to us.
c) To complete a Stoddart Warranty Request Form you will require the following information:
   i. Proof of purchase stating model number and date of purchase;
   ii. The serial number of the equipment (this is located on the ratings plate sticker);
   iii. A description of the fault/problem;
   iv. Your company details including the exact location of the equipment; and
   v. Any restrictions on times or methods of access to the equipment.

   Stoddart will not arrange a warranty call out until it receives the above information from you in writing.
d) Upon receipt of a properly completed Stoddart Warranty Request Form, Stoddart will check its records to confirm whether the equipment is eligible for warranty repair. If warranty repair is required, Stoddart will issue an OFFICIAL AUTHORISATION NUMBER and details of work to be carried out by a Stoddart authorised service agent. This authorisation number MUST be obtained

before any work is carried out. Stoddart will not accept invoices for work carried out without an official authorisation number or by an unauthorised service agent.

e) Customer must quote the official authorisation number on all correspondence and invoices relating to a warranty claim to ensure prompt processing by Stoddart.

f) Customer must pay all costs associated with a call-out for work that is not related to warranty repairs or outside Stoddart's Terms immediately.

5. Timing of Warranty Services

5.1 Stoddart will comply with its warranty liabilities contained in these Terms in a timely manner

6. General Maintenance and Repairs

6.1 The equipment must be repaired and maintained by a qualified technician. Stoddart's authorised service agents are experienced technicians who understand the equipment and carry commonly used spare parts. Contact Stoddart's national service number listed below for details of your nearest Stoddart authorised service agent.

For Warranty, maintenance, spare parts and repairs, contact:
Tel: 1300 307 289 email: service@stoddart.com.au