ITEM NO.	PART NUMBER	DESCRIPTION	Rev	Drawing Number	QTY.
1	WCFS25SS-A002	Body	C	WCFS25SS-A002	1
2	WCFS2xSS-CH-A001	Compressor Housing	C	WCFS2xSS-CH-D001	1

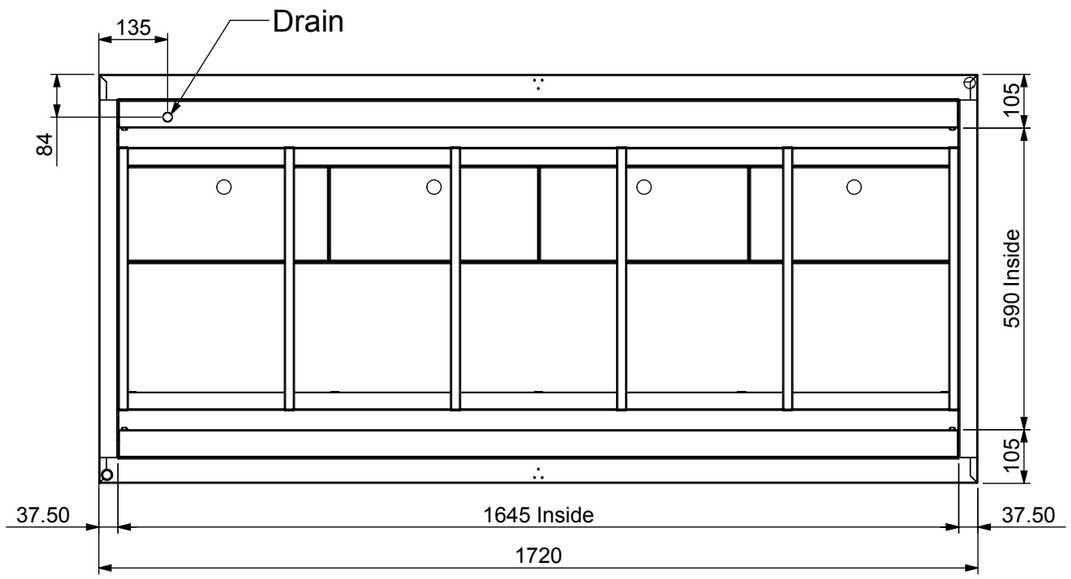

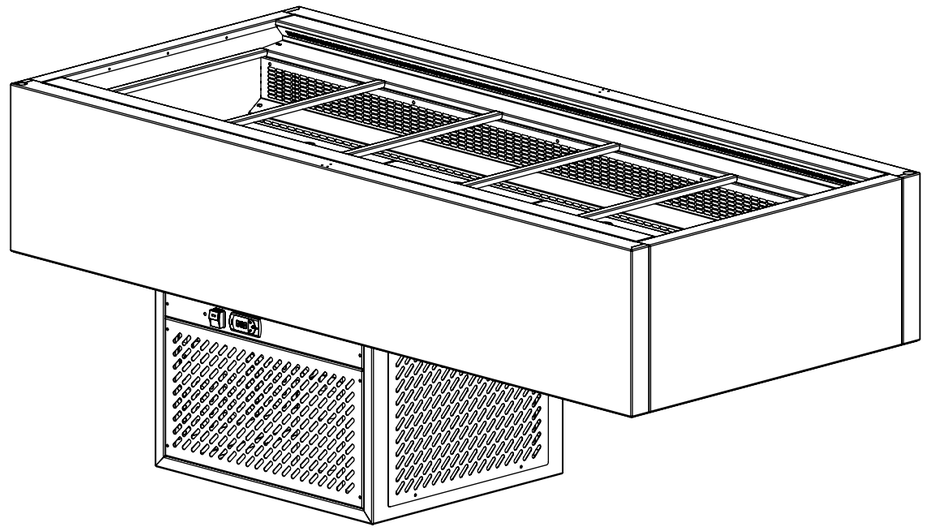

Product Details

Electrical Connection: 10A Plug & Lead (supplied)
Electrical Rating : 240V, 4.2A, 1000W
Waste : 20mm with drain hose attached
Unit Controls : Switch for main power
: Carel controller with digital readout

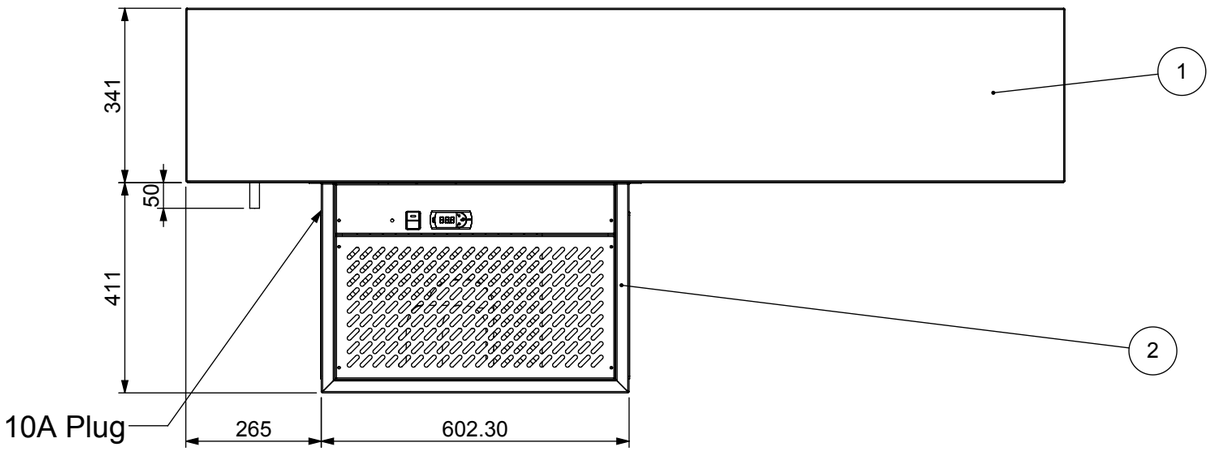

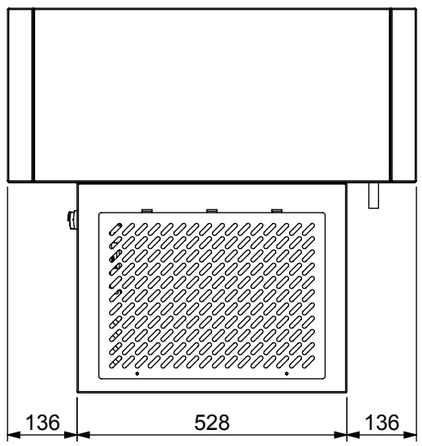

STODDART
MANUFACTURING
TOM STODDART Pty Ltd ACN 009 690 251
215 Jackson Rd Sunnybank Hills Qld 4109
PO Box 420 Sunnybank Qld 4109
Phone (617) 3344 2444 Fax (617) 3345 6403
Email sunnybank@stoddart.com.au
Quality in stainless steel

	NAME	SIGNATURE	DATE
DRAWN	C Booth		14/11/2006
APPV'D			

UNLESS OTHERWISE SPECIFIED: DIMENSIONS ARE IN MILLIMETERS

Weight:
Surface Area:

MATERIAL:
THICKNESS:
FINISH:

Woodson Self Serve Cold Food Bar

PART No: **WCFN25SS-A001**

DESCRIPTION: Cold Self Serve 5 Bay No Gantry

DWG No: WCFN25SS-D001

Dwg. Issue 3

DO NOT SCALE DRAWING

This drawing remains the property of Tom Stoddart Pty Ltd & cannot be reproduced without prior permission.

A3 Sheet 1 of 3

REV.	REVISED BY	DATE	REVISION DESCRIPTION	STATUS
C	C Booth	14/11/2006	Updated to match WCFS25SS	

F:\08_Food Service Equipment\03_Engineering - FSE\01_Stoddart Standard Products\Woodson\WCFN2xSS Cold Food Display-Self Serve-Flat Deck\01_Solidworks\WCFN25SS\