Product Details

Electrical Connection	: Supply single phase
	: 240v, 4.2amps 1000w, 10amp plug & lead supplied
	: 1 fluoro light @ 36w (240V)
Waste	: 13mm with 19mm drain
Unit Controls	: Switch for main power with electronic thermostat
	: Switch for light
Refrig. Components	: 1 cross-fin evaporator coil
	: 1 condenser unit

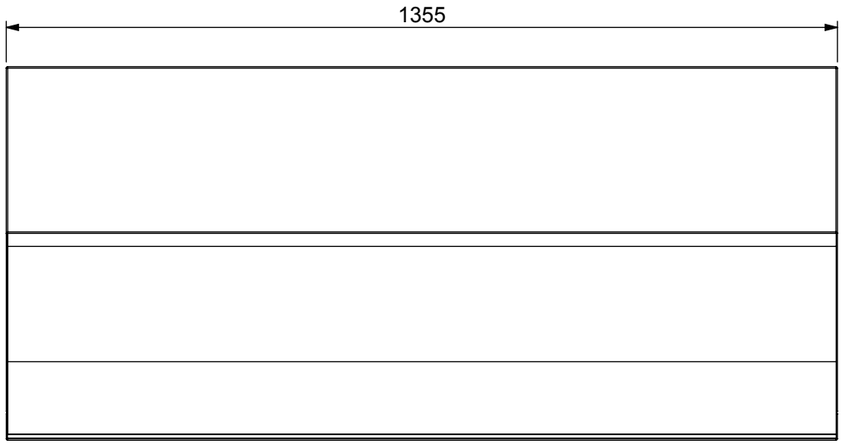

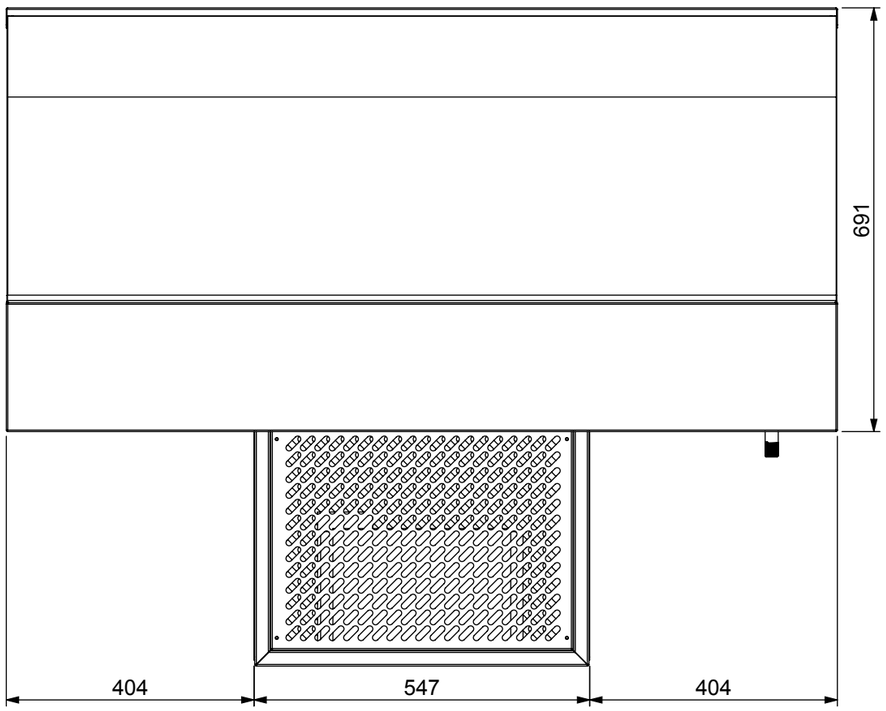

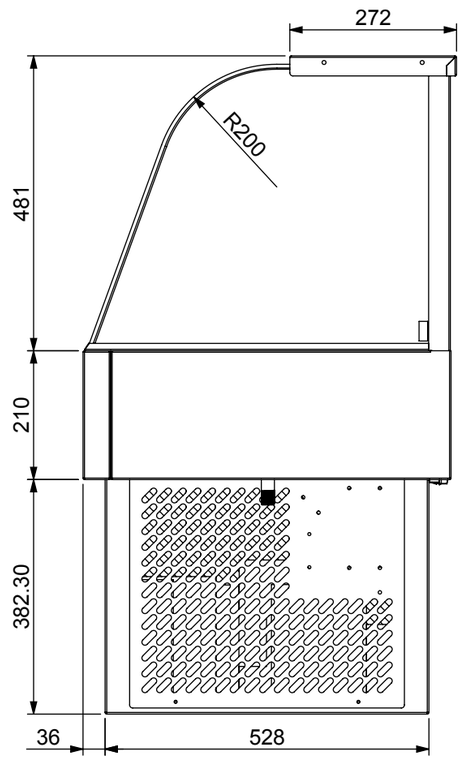

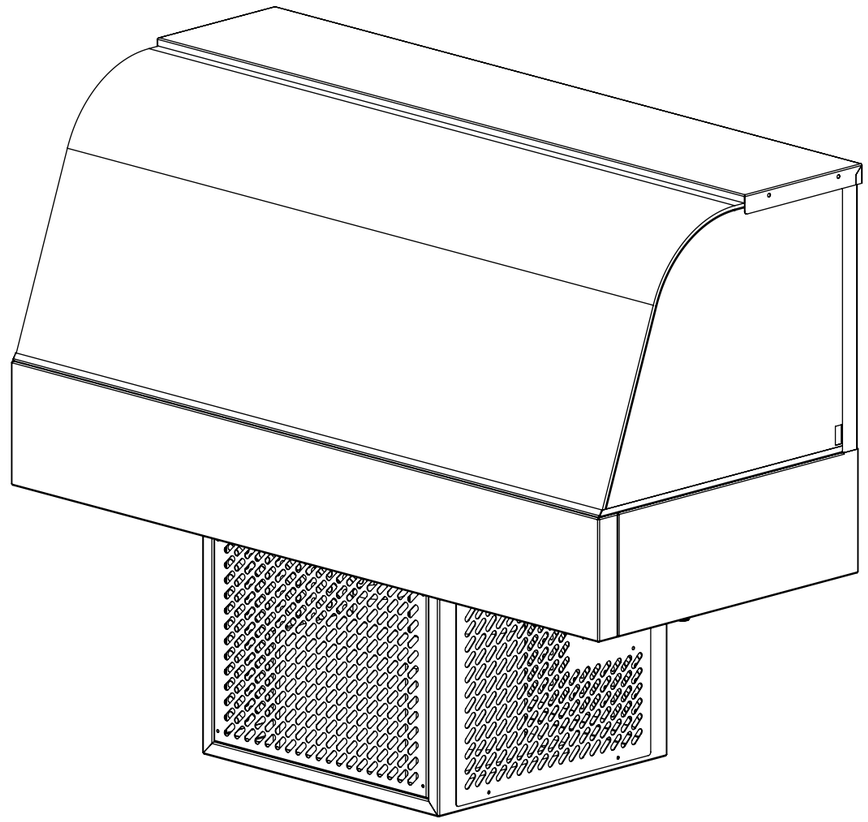

STODDART
MANUFACTURING
TOM STODDART Pty Ltd ACN 009 690 251
215 Jackson Rd Sunnybank Hills Qld 4109
PO Box 420 Sunnybank Qld 4109
Phone (617) 3344 2444 Fax (617) 3345 6403
Email sunnybank@stoddart.com.au
Quality in stainless steel

Woodson Cold Food Bar					PART No: WCFC24-A001	
	NAME	SIGNATURE	DATE	UNLESS OTHERWISE SPECIFIED: DIMENSIONS ARE IN MILLIMETERS	DESCRIPTION: 4 Bay Cold Food Bar	
DRAWN	N Wooler		23/02/2005			
APPV'D				MATERIAL:		
Weight: Surface Area:				THICKNESS: FINISH:	DWG No: WCFC24-D001	Dwg. Issue 1
DO NOT SCALE DRAWING		This drawing remains the property of Tom Stoddart Pty Ltd & cannot be reproduced without prior permission.			A3	Sheet 1 of 8

F:\08_Food Service Equipment\03_Engineering - FSE\01_Stoddart Standard Products\Woodson\WCFC2x WCFS2x Cold Food Display\01_Solidworks\WCFC24\