Product Details

Electrical Connection	: Single phase 10Amp plug & lead (supplied)
Electrical Rating	: 240V, 4.2amps 1000w
	: 1 fluorescent light @ 30W (240V)
	: 1 condenser unit @ 570W (240V)
Waste	: 13mm with 19mm drain
Unit Controls	: Switch for main power with electronic thermostat
	: Switch for fluorescent light
Refrig. Components	: 1 cross fin coil
	: 1 condenser unit

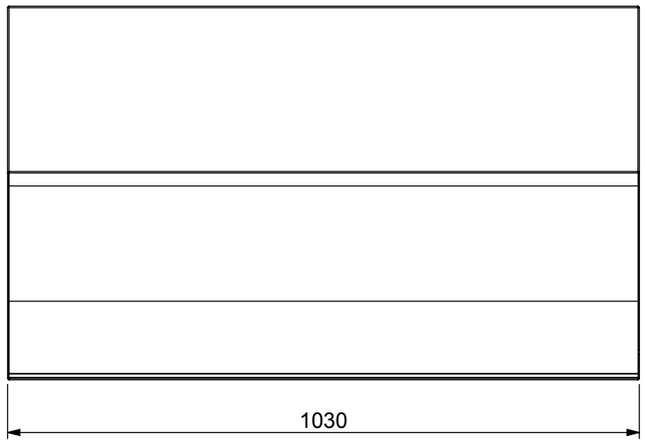

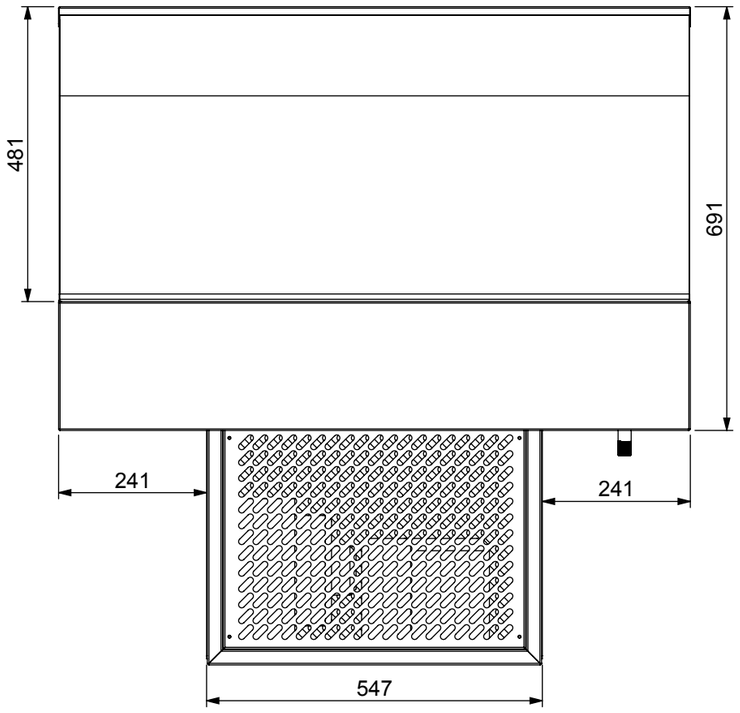

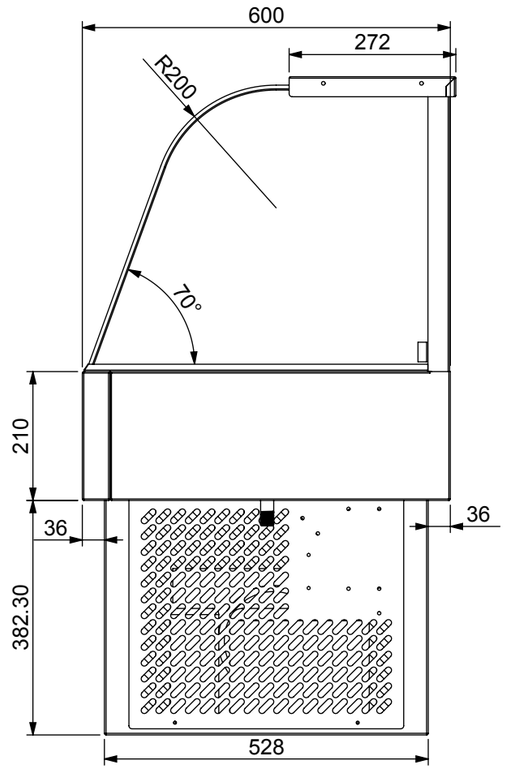

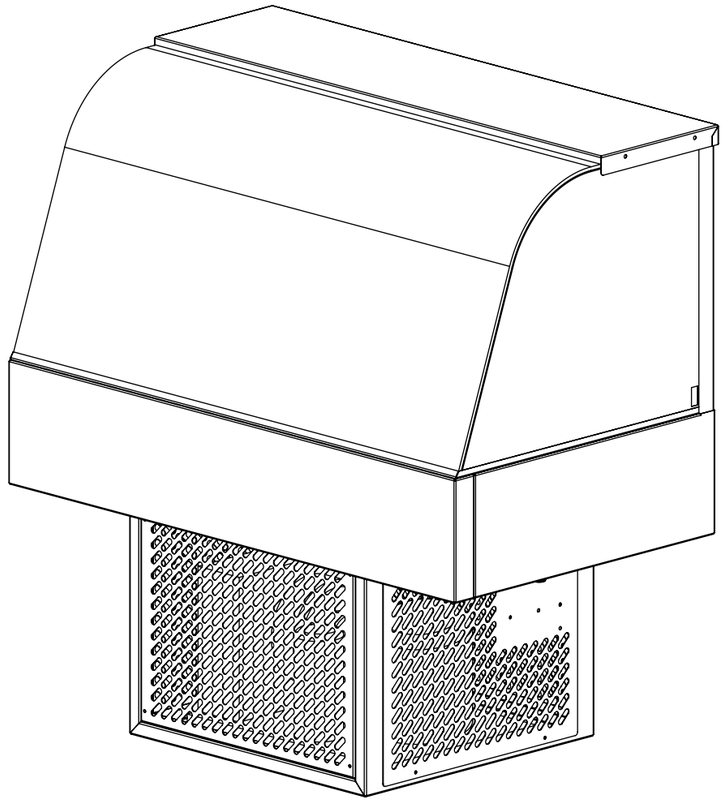

STODDART
MANUFACTURING
TOM STODDART Pty Ltd ACN 009 690 251
215 Jackson Rd Sunnybank Hills Qld 4109
PO Box 420 Sunnybank Qld 4109
Phone (617) 3344 2444 Fax (617) 3345 6403
Email sunnybank@stoddart.com.au
Quality in stainless steel

Woodson Cold Food Bar

	NAME	SIGNATURE	DATE
DRAWN	N Wooler		23/02/2005
APPV'D			

UNLESS OTHERWISE SPECIFIED: DIMENSIONS ARE IN MILLIMETERS

MATERIAL:
THICKNESS:
FINISH:

Weight:
Surface Area:

PART No: WCFC23-A001
DESCRIPTION: Curved Glass
DWG No: WCFC23-D001
Dwg. Issue 1

DO NOT SCALE DRAWING

This drawing remains the property of Tom Stoddart Pty Ltd & cannot be reproduced without prior permission.

A3 | Sheet 1 of 8

F:\08_Food Service Equipment\03_Engineering - FSE\01_Stoddart Standard Products\Woodson\WCFC2x WCFS2x Cold Food Display\01_Solidworks\WCFC23\