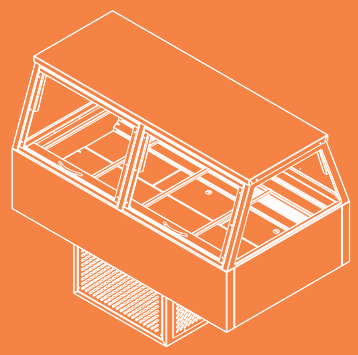

W.CFSxx.SS
self serve cold food display

woodson®
PROFESSIONAL FOOD SERVICE EQUIPMENT

FOOD DISPLAY SERIES

Cold air is blown above the produce

Removable floor panels for easy cleaning

Cold air is blown under the produce

Fluorescent lighting with diffuser

APPLICATION

A functional and attractive method to promote, prepare and store cold products for buffets, caterers and smorgasboards

FEATURES & BENEFITS

- Refrigerated ingredient well with cold air blowing over and below 100mm deep gastronorm pans
- Front and rear lexen doors can be lifted and locked into upright position to act as sneeze guards
- Unique full-length evaporator coil
- Self contained end mounted refrigeration system
- Illuminated gantry using fluorescent lights with diffuser
- Toughened glass panels at gantry ends
- All stainless steel body construction in bright annealed finish
- Adjustable micro-processor control with digital temperature display
- Easy to clean design with liftout floor panels

OPTIONS

- **Gastronorm pans to suit**

self serve cold food display

woodson®

SIDE VIEW

We reserve the right to alter specifications of products without notice

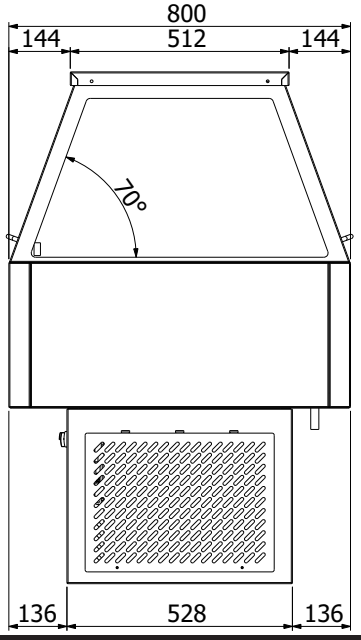

REAR VIEW

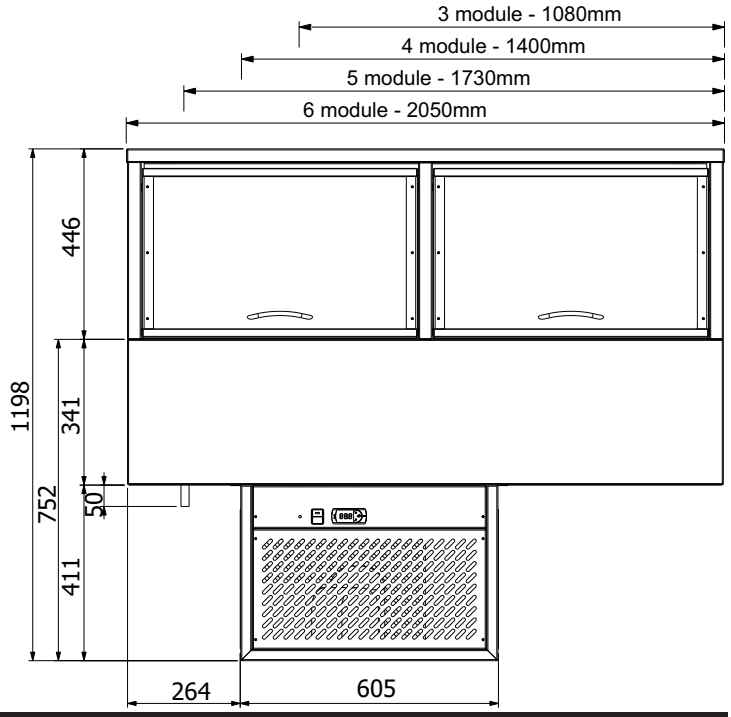

AVAILABLE MODELS

MODEL	Description	Dimensions	Power
WCFS23SS.G	3 module unit with rear sliding glass doors	1080 x 800 x 1200	1.0kW - 4.2Amp
WCFS23SS.G.65	As above, with 6 x 1/2 GN pans, 65mm deep		
WCFS24SS.G	4 module unit with rear sliding glass doors	1400 x 800 x 1200	1.0kW - 4.2Amp
WCFS24SS.G.65	As above, with 8 x 1/2 GN pans, 65mm deep		
WCFS25SS.G	5 module unit with rear sliding glass doors	1730 x 800 x 1200	1.0kW - 4.2Amp
WCFS25SS.G.65	As above, with 10 x 1/2 GN pans, 65mm deep		
WCFS26SS.G	6 module unit with rear sliding glass doors	2050 x 800 x 1200	1.0kW - 4.2Amp
WCFS26SS.G.65	As above, with 12 x 1/2 GN pans, 65mm deep		

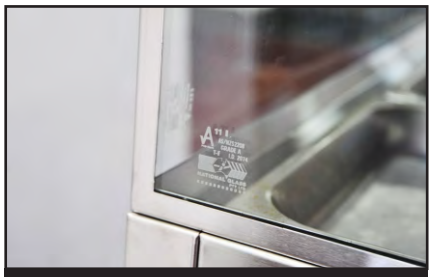

Toughened glass display case

Interchangeable runners and gastronorm pans

Micro-processor control with digital display

Dealer:

For details of your local dealer contact:

QLD
Tel: 07 3344 2444
Fax: 07 3345 6403
fse@stoddart.com.au

WA
Tel: 08 9414 1343
Fax: 08 9414 1361
perth@stoddart.com.au

NSW
Tel: 02 8832 4399
Fax: 02 8832 4355
sydney@stoddart.com.au

VIC & TAS
Tel: 03 9565 4699
Fax: 03 9565 4655
melbourne@stoddart.com.au

SA & NT
Tel: 1300 79 1954
adelaide@stoddart.com.au

Manufactured by: Tom Stoddart Pty Ltd, 215 Jackson Road Sunnybank Hills, Qld 4109 Australia

Version 0912