Heliosa 9 Waterproof Heater

9S22 - On/off control

SPECIFICATIONS

Power	2200 Watts
Heated area	20-25 m²
Net weight	2.45 kg
Gross weight	3.50 kg
Plug Supplied	10 amp, 5 metre cable
Warranty	4 Year Parts & 2 Years Labour (Asset must be registered to activate full warranty)

DIMENSIONS

External Width	465
External Height	195
External Depth	113

Main Features

- Heats up to 20-25 square metres
- IPX5 waterproof
- Silver colour
- Oven painted with epoxy powder
- Reflective aluminum reflector
- Power cable length 5 metres
- Suitable for both inside and outside areas

THE GOOD LADY

Phone: 1800 183 818 | Email: support@thegoodlady.com.au
Website: www.thegoodlady.com.au

FRONT

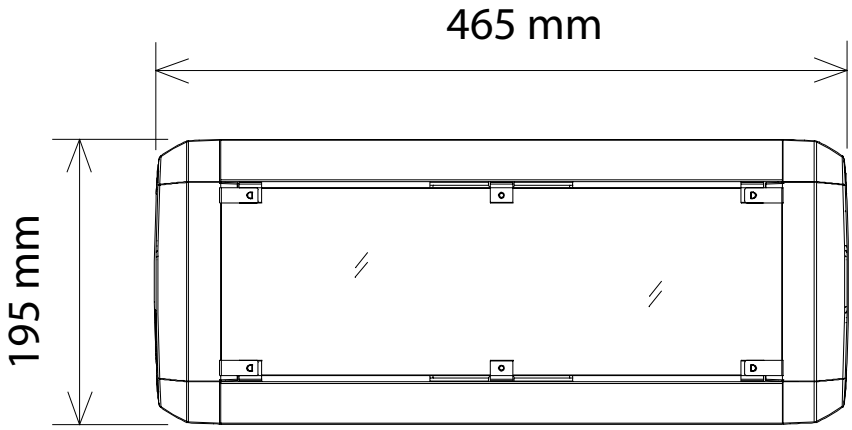

SIDE

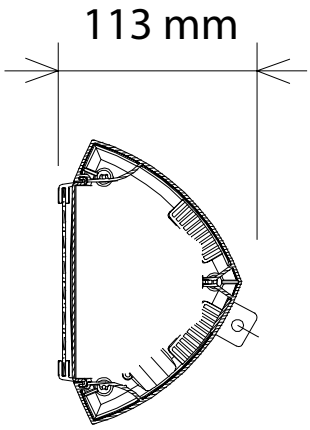

TOP

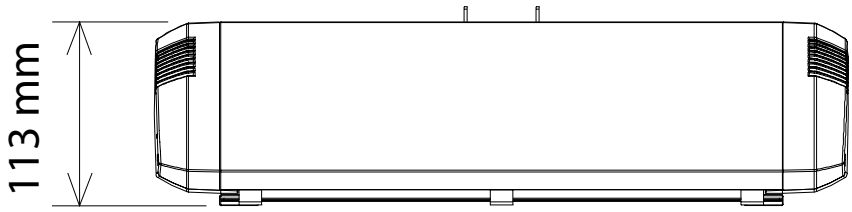

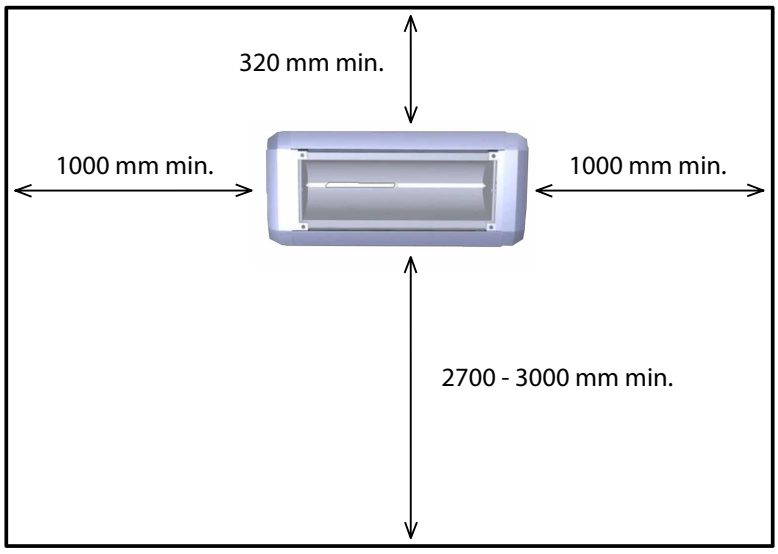

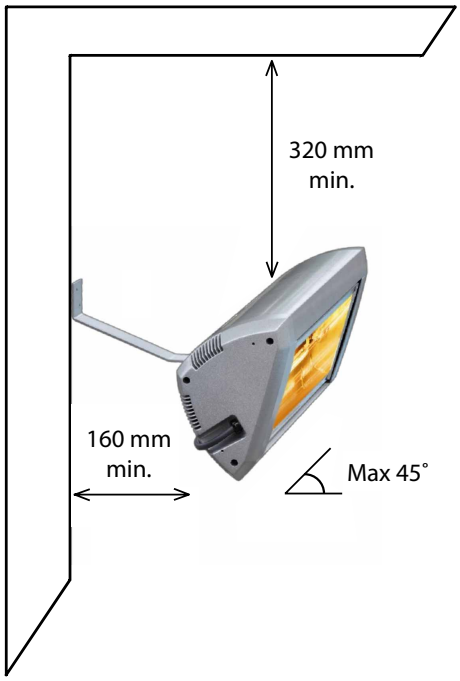

WALL INSTALLATION

Heliosa must be placed perfectly horizontal and outside distances as above.

We reserve the right to alter specifications without notice.