Heliosa 9.2 Waterproof Heater

9/2S22BT - Bluetooth control

With the APP, you can:

- Turn the heater on and off
- Gradually adjust the power from 0 to 100% on each heater or simultaneously all heaters connected to the transmitter operating area
- Manage up to 15 heaters
- Customise the heater profiles and set a password
- Set sleep timer

SPECIFICATIONS

Power	2200 Watts
Heated area	20-25 m²
Net weight	3.17 kg
Gross weight	4.22 kg
Warranty	4 Year Parts & 2 Years Labour (Asset must be registered to activate full warranty)

DIMENSIONS

External Width	540
External Height	195
External Depth	113

Main Features

- Heats up to 20-25 square metres
- IPX5 waterproof
- Silver colour
- Oven painted with epoxy powder
- Reflective aluminum reflector
- Power cable length 5 metres
- Suitable for both inside and outside areas
- Bluetooth control via smartphone app
- Remote control

THE GOOD LADY

Phone: 1800 183 818 | Email: support@thegoodlady.com.au
Website: www.thegoodlady.com.au

FRONT

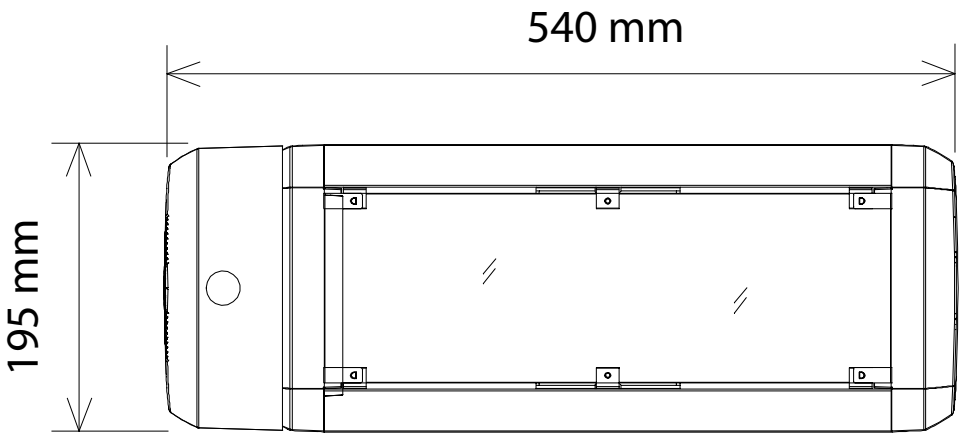

SIDE

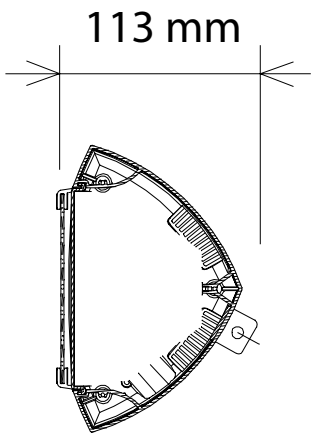

TOP

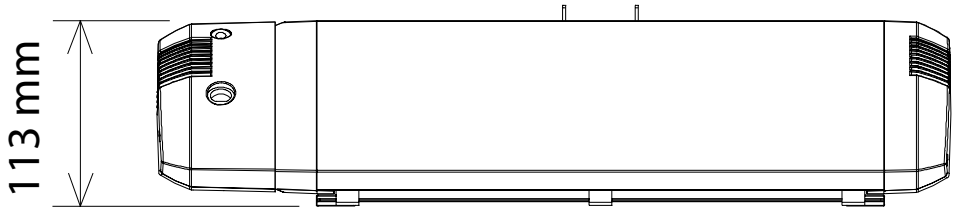

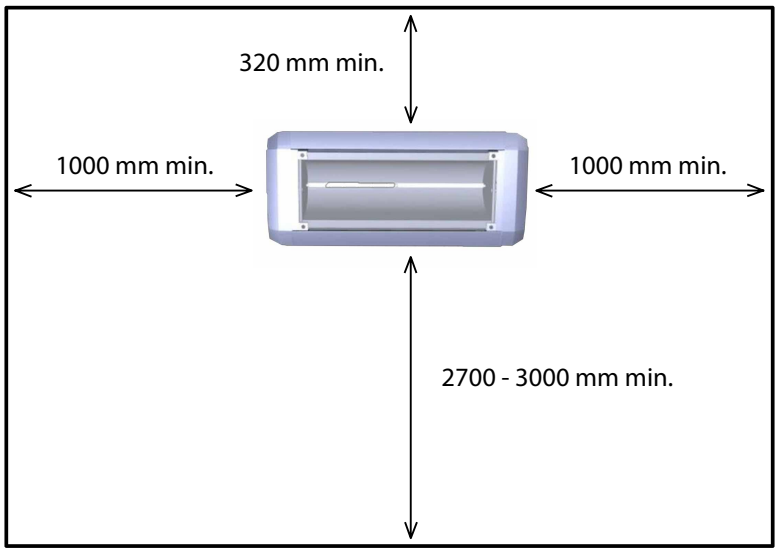

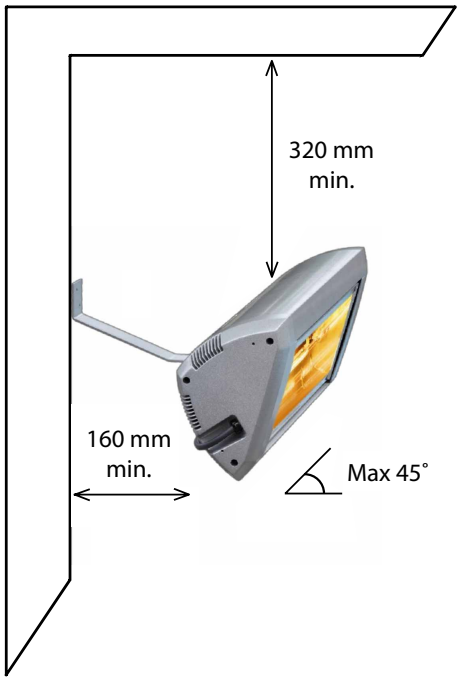

WALL INSTALLATION

Heliosa must be placed perfectly horizontal and outside distances as above.

We reserve the right to alter specifications without notice.

Phone: 1800 183 818 | Email: support@thegoodlady.com.au
Website: www.thegoodlady.com.au

THE GOOD LADY