Heliosa 99 Waterproof Heater

99S40 - On/off control

WATERPROOF

SPECIFICATIONS

Power	4000 Watts
Heated area	40-45 m²
Net weight	4.05 kg
Gross weight	5.55 kg
Warranty	4 Year Parts & 2 Years Labour (Asset must be registered to activate full warranty)

DIMENSIONS

External Width	910
External Height	195
External Depth	113

Main Features

- Heats up to 40-45 square metres
- IPX5 waterproof
- Silver colour
- Oven painted with epoxy powder
- Reflective aluminum reflector
- Power cable length 5 metres
- Suitable for both inside and outside areas
- Bluetooth control via smartphone app
- Remote control

THE GOOD LADY

Phone: 1800 183 818 | Email: support@thegoodlady.com.au
Website: www.thegoodlady.com.au

FRONT

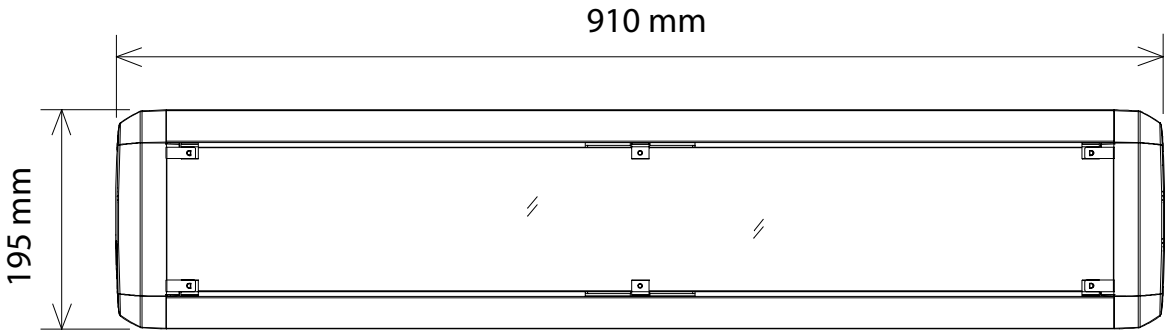

SIDE

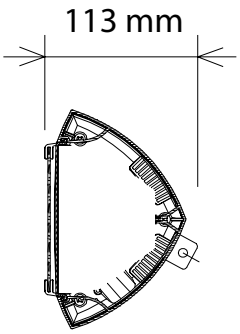

TOP

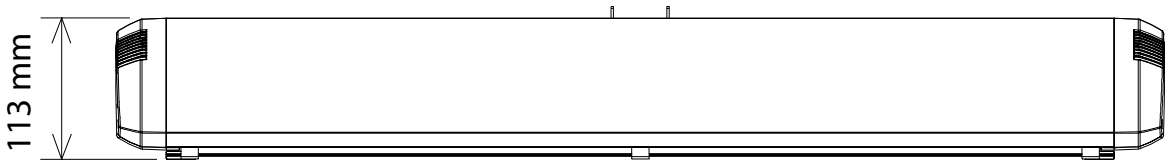

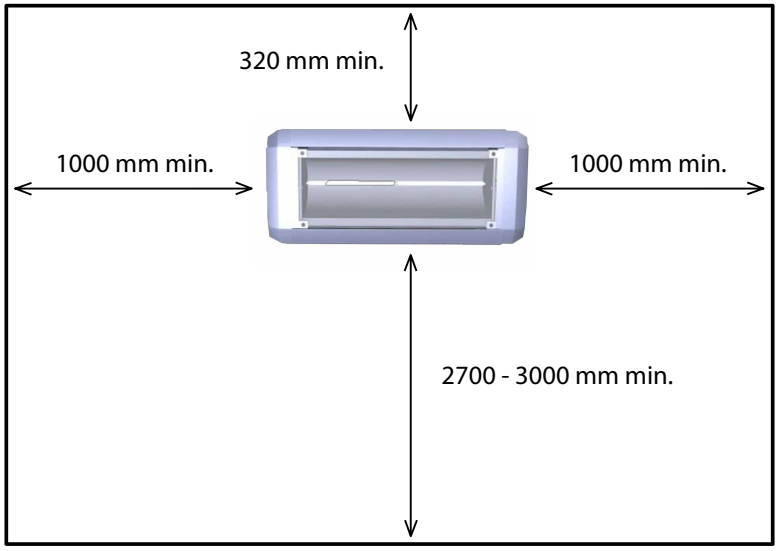

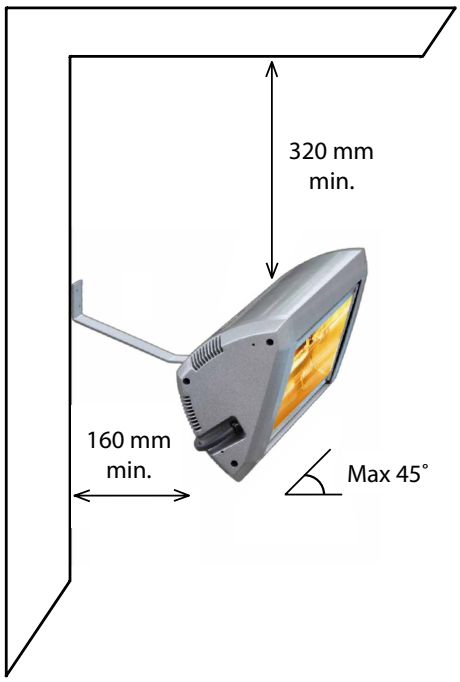

WALL INSTALLATION

Heliosa must be placed perfectly horizontal and outside distances as above.

We reserve the right to alter specifications without notice.