# Heliosa 99.2 Waterproof Heater

## 99/2S40BT - Bluetooth control

WATERPROOF

Blueapp

**With the APP, you can:**

- Turn the heater on and off
- Gradually adjust the power from 0 to 100% on each heater or simultaneously all heaters connected to the transmitter operating area
- Manage up to 15 heaters
- Customise the heater profiles and set a password
- Set sleep timer

## SPECIFICATIONS

| | |
|---|---|
| Power | 4000 Watts |
| Heated area | 40-45 m² |
| Net weight | 4.90 kg |
| Gross weight | 6.40 kg |
| Warranty | 4 Year Parts & 2 Years Labour<br>(Asset must be registered to activate full warranty) |

## DIMENSIONS

| | |
|---|---|
| External Width | 990 |
| External Height | 195 |
| External Depth | 113 |

# Main Features

- Heats up to 40-45 square metres
- IPX5 waterproof
- Silver colour
- Oven painted with epoxy powder
- Reflective aluminum reflector
- Power cable length 5 metres
- Suitable for both inside and outside areas
- Bluetooth control via smartphone app
- Remote control

THE GOOD LADY

Phone: 1800 183 818 | Email: support@thegoodlady.com.au
Website: www.thegoodlady.com.au

## FRONT

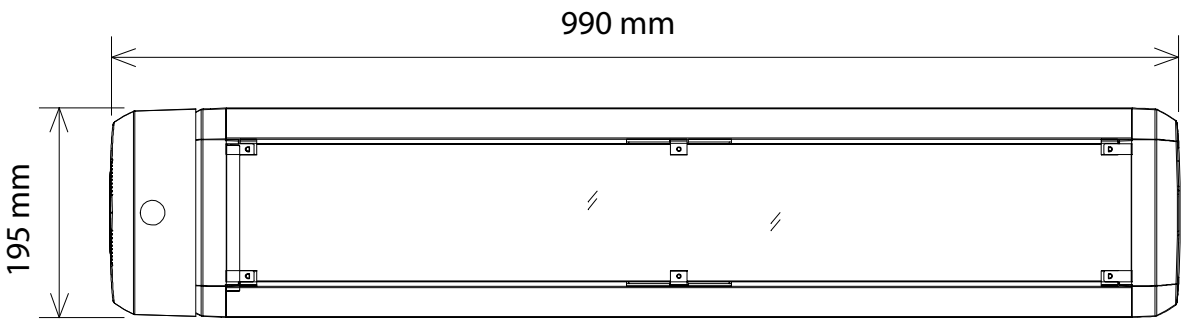


## SIDE

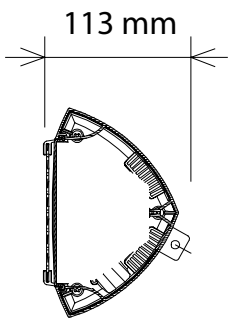


## TOP

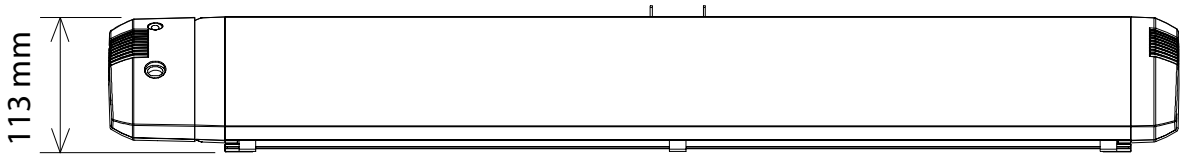


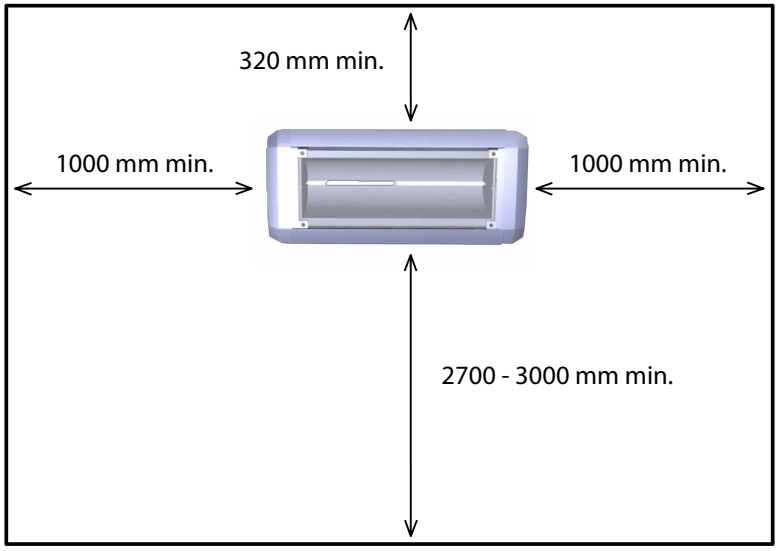


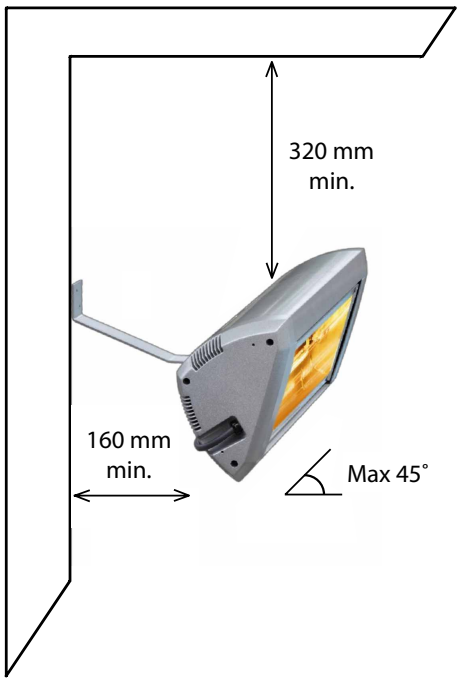


### WALL INSTALLATION

Heliosa must be placed perfectly horizontal and outside distances as above.

We reserve the right to alter specifications without notice.