OPERATOR'S MANUAL

TAYLOR

United Technologies

Model 750, 751, 754, 774, 791, & 794 Soft Serve Freezers

Original Operating Instructions

028754-M

2/01/02 (Original Publication)
Updated 8/3/15

Complete this page for quick reference when service is required:

Taylor Distributor:_____

Address:_____

Phone:_____

Service:_____

Parts:_____

Date of Installation:_____

Information found on the data label:

Model Number:_____

Serial Number:_____

Electrical Specs: Voltage_____Cycle_____

Phase_____

Maximum Fuse Size:_____A

Minimum Wire Ampacity:_____A

© 2002 Carrier Commercial Refrigeration, Inc.
028754-M
Any unauthorized reproduction, disclosure, or distribution of copies by any person of any portion of this work may be a violation of Copyright Law of the United States of America and other countries, could result in the awarding of Statutory Damages of up to $250,000 (17 USC 504) for infringement, and may result in further civil and criminal penalties. All rights reserved.

Taylor Company
a division of Carrier Commercial Refrigeration, Inc.
750 N. Blackhawk Blvd.
Rockton, IL 61072

Table of Contents

Section 1 To the Installer 1

Section 2 To the Operator 4

Section 3 Safety 5

Section 4 Operator Parts Identification 7

Model 750 7
Model 751 8
Model 754 9
Model 774 10
Model 774 Topping Pump (053794-) 11
Model 791 12
Model 794 13
Models 750 & 751 Single Spout Door and Beater Assembly 14
Models 754, 774 & 794 Three Spout Door and Beater Assembly 15
Model 791 Three Spout Door and Beater Assembly 16
Accessories 17

Section 5 Important: To the Operator 18

Symbol Definitions 18
Power Switch 19
MIX LOW Indicator Light 19
MIX REF Key 19
STANDBY Key 19
WASH Key 19
AUTO Key 19
Reset Button 20
Air Tube 20
Adjustable Draw Handle 20

Section 6 Operating Procedures 21

Prior to Set- Up (Model 774) 21
Assembly 21
Sanitizing 26
Priming 28
Closing Procedure 29

Draining Product From The Freezing Cylinder 29
Rinsing 29
Cleaning 29
Disassembly 30
Brush Cleaning 30
Section 7 Important: Operator Checklist 31
During Cleaning and Sanitizing 31
Troubleshooting Bacterial Count 31
Regular Maintenance Checks 31
Winter Storage 32
Section 8 Troubleshooting Guide 33
Section 9 Parts Replacement Schedule 36
Section 10 Limited Warranty on Equipment 37
Section 11 Limited Warranty on Parts 39

Note: Continuing research results in steady improvements; therefore, information in this manual is subject to change without notice.

Note: Only instructions originating from the factory or its authorized translation representative(s) are considered to be the original set of instructions.

© 2002 Carrier Commercial Refrigeration, Inc. (Original Publication)
(Updated August, 2015)
All rights reserved.
028754- M

Any unauthorized reproduction, disclosure, or distribution of copies by any person of any portion of this work may be a violation of Copyright Law of the United States of America and other countries, could result in the awarding of Statutory Damages of up to $250,000 (17 USC 504) for infringement, and may result in further civil and criminal penalties. All rights reserved.

Taylor Company
a division of Carrier Commercial Refrigeration, Inc.
750 N. Blackhawk Blvd.
Rockton, IL 61072

Section 1 To the Installer

The following information has been included in the manual as safety and regulatory guidelines. For complete installation instructions, please see the Installation Checklist.

Installer Safety

In all areas of the world, equipment should be installed in accordance with existing local codes. Please contact your local authorities if you have any questions.

Care should be taken to ensure that all basic safety practices are followed during the installation and servicing activities related to the installation and service of Taylor equipment.

- Only authorized Taylor service personnel should perform installation and repairs on the equipment.
- Authorized service personnel should consult OSHA Standard 29CFRI910.147 or the applicable code of the local area for the industry standards on lockout/tagout procedures before beginning any installation or repairs.
- Authorized service personnel must ensure that the proper PPE is available and worn when required during installation and service.
- Authorized service personnel must remove all metal jewelry, rings, and watches before working on electrical equipment.

The main power supply(ies) to the freezer must be disconnected prior to performing any repairs. Failure to follow this instruction may result in personal injury or death from electrical shock or hazardous moving parts as well as poor performance or damage to the equipment.

Note: All repairs must be performed by an authorized Taylor Service Technician.

This unit has many sharp edges that can cause severe injuries.

Site Preparation

Review the area the unit is to be installed in before uncrating the unit making sure that all possible hazards the user or equipment may come into have been addressed.

Air Cooled Units

DO NOT obstruct air intake and discharge openings:

Counter Model: 6” (152 mm) minimum air space on both sides and 0” on the rear.
Console Models: 3” (76 mm) minimum air space on all sides.

This will allow for adequate air flow across the condenser(s). Failure to allow adequate clearance can reduce the refrigeration capacity of the freezer and possibly cause permanent damage to the compressor.

For Indoor Use Only: This unit is designed to operate indoors, under normal ambient temperatures of 70°-75°F (21°-24°C). The freezer has successfully performed in high ambient temperatures of 104°(40°C) at reduced capacities.

This unit must **NOT** be installed in an area where a water jet or hose can be used. **NEVER** use a water jet or hose to rinse or clean the unit. Failure to follow this instruction may result in electrocution.

This unit must be installed on a level surface to avoid the hazard of tipping. Extreme care should be taken in moving this equipment for any reason. Two or more persons are required to safely move this unit. Failure to comply may result in personal injury or equipment damage.

Uncrate the unit and inspect it for damage. Report any damage to your Taylor Distributor.

This piece of equipment is made in the USA and has USA sizes of hardware. All metric conversions are approximate and vary in size.

Water Connections
(Water Cooled Units Only)

An adequate cold water supply must be provided with a hand shut- off valve. On the underside rear of the base pan, two 3/8" I.P.S. (for single- head units) or two 1/2" I.P.S. (for double- head units) water connections for inlet and outlet have been provided for easy hook- up. 1/2" inside diameter water lines should be connected to the machine. (Flexible lines are recommended, if local codes permit.) Depending on local water conditions, it may be advisable to install a water strainer to prevent foreign substances from clogging the automatic water valve. There will be only one water "in" and one water "out" connection for both single- head and double- head units. DO NOT install a hand shut- off valve on the water "out" line! Water should always flow in this order: first, through the automatic water valve; second, through the condenser; and third, through the outlet fitting to an **open trap drain.**

A back flow prevention device is required on the incoming water connection side. Please refer to the applicable National, State, and local codes for determining the proper configuration.

Electrical Connections

In the United States, this equipment is intended to be installed in accordance with the National Electrical Code (NEC), ANSI/NFPA 70-1987. The purpose of the NEC code is the practical safeguarding of persons and property from hazards arising from the use of electricity. This code contains provisions considered necessary for safety. In all other areas of the world, equipment should be installed in accordance with the existing local codes. Please contact your local authorities.

FOLLOW YOUR LOCAL ELECTRICAL CODES!

Each unit requires one power supply for each data label on the unit. Check the data label(s) on the freezer for branch circuit overcurrent protection or fuse, circuit ampacity, and other electrical specifications. Refer to the wiring diagram provided inside of the electrical box for proper power connections.

CAUTION: THIS EQUIPMENT MUST BE PROPERLY GROUNDED! FAILURE TO DO SO CAN RESULT IN SEVERE PERSONAL INJURY FROM ELECTRICAL SHOCK!

DO NOT operate this freezer with larger fuses than specified on the unit data label. Failure to follow this instruction may result in electrocution or damage to the machine.

This unit is provided with an equipotential grounding lug that is to be properly attached to the rear of the frame by the authorized installer. The installation location is marked by the equipotential bonding symbol (5021 of IEC 60417-1) on both the removable panel and the equipment's frame.

Stationary appliances which are not equipped with a power cord and a plug or another device to disconnect the appliance from the power source must have an all-pole disconnecting device with a contact gap of at least 3 mm installed in the external installation.

Appliances that are permanently connected to fixed wiring and for which leakage currents may exceed 10 mA, particularly when disconnected or not used for long periods, or during initial installation, shall have protective devices such as a GFI, to protect against the leakage of current, installed by the authorized personnel to the local codes.

Supply cords used with this unit shall be oil-resistant, sheathed flexible cable not lighter than ordinary polychloroprene or other equivalent synthetic elastomer-sheathed cord (Code designation 60245 IEC 57) installed with the proper cord anchorage to relieve conductors from strain, including twisting, at the terminals and protect the insulation of the conductors from abrasion.

If the supply cord is damaged, it must be replaced by an authorized Taylor service technician in order to avoid a hazard.

Beater Rotation

Beater rotation must be clockwise as viewed looking into the freezing cylinder.

Note: The following procedures should be performed by a trained service technician.

To correct the rotation on a three- phase unit, interchange any two incoming power supply lines at freezer main terminal block only.

To correct rotation on a single- phase unit, change the leads inside the beater motor. (Follow the diagram printed on the motor.)

Electrical connections are made directly to the terminal block provided in the main control box located under the upper left side panel on the countertop unit, or behind the service panel on the console units.

Refrigerant

In consideration of our environment, Taylor uses only earth friendly HFC refrigerants. The HFC refrigerant used in this unit is R404A. This refrigerant is generally considered non-toxic and non-flammable, with an Ozone Depleting Potential (ODP) of zero (0).

However, any gas under pressure is potentially hazardous and must be handled with caution. NEVER fill any refrigerant cylinder completely with liquid. Filling the cylinder to approximately 80% will allow for normal expansion.

Use only R404A refrigerant that conforms to the AHRI standard 700 specification. The use of any other refrigerant may expose users and operators to unexpected safety hazards.

Refrigerant liquid sprayed onto the skin may cause serious damage to tissue. Keep eyes and skin protected. If refrigerant burns should occur, flush immediately with cold water. If burns are severe, apply ice packs and contact a physician immediately.

Taylor reminds technicians to be cautious of government laws regarding refrigerant recovery, recycling, and reclaiming systems. If you have any questions regarding these laws, please contact the factory Service Department.

WARNING: R404A refrigerant used in conjunction with polyolester oils is extremely moisture absorbent. When opening a refrigeration system, the maximum time the system is open must not exceed 15 minutes. Cap all open tubing to prevent humid air or water from being absorbed by the oil.

Section 2 To the Operator

The freezer you have purchased has been carefully engineered and manufactured to give you dependable operation. The Taylor soft-serve models covered in this manual consist of the following: 750, 751, 754, 774, 791, and 794.

These units, when properly operated and cared for, will produce a consistent quality product. Like all mechanical products, they will require cleaning and maintenance. A minimum amount of care and attention is necessary if the operating procedures outlined in this manual are followed closely.

This Operator's Manual should be read before operating or performing any maintenance on your equipment.

Your freezer will NOT eventually compensate and correct for any errors during the set-up or filling operations. Thus, the initial assembly and priming procedures are of extreme importance. It is strongly recommended that all personnel responsible for the equipment's operation study these procedures together in order to be properly trained and to make sure that no misunderstandings exist.

In the event you should require technical assistance, please contact your local authorized Taylor Distributor.

Note: Your Taylor warranty is valid only if the parts are authorized Taylor parts, purchased from the local authorized Taylor Distributor, and only if all required service work is provided by an authorized Taylor service technician. Taylor reserves the right to deny warranty claims on units or parts if non-Taylor approved parts or incorrect refrigerant were installed in the unit, system modifications were performed beyond factory recommendations, or it is determined that the failure was caused by abuse, misuse, neglect, or failure to follow all operating instructions. For full details of your Taylor Warranty, please see the Limited Warranty section in this manual.

Note: Constant research results in steady improvements; therefore, information in this manual is subject to change without notice.

If the crossed out wheeled bin symbol is affixed to this product, it signifies that this product is compliant with the EU Directive as well as other similar legislation in effect after August 13, 2005. Therefore, it must be collected separately after its use is completed, and cannot be disposed as unsorted municipal waste. The user is responsible for returning the product to the appropriate collection facility, as specified by your local code.

For additional information regarding applicable local laws, please contact the municipal facility and/or local distributor.

Compressor Warranty Disclaimer

The refrigeration compressor(s) on this unit are warranted for the term stated in the Limited Warranty section in this manual. However, due to the Montreal Protocol and the U.S. Clean Air Act Amendments of 1990, many new refrigerants are being tested and developed, thus seeking their way into the service industry. Some of these new refrigerants are being advertised as drop-in replacements for numerous applications. It should be noted that in the event of ordinary service to this unit's refrigeration system, **only the refrigerant specified on the affixed data label should be used**. The unauthorized use of alternate refrigerants will void your Taylor compressor warranty. It is the unit owner's responsibility to make this fact known to any technician he employs.

It should also be noted that Taylor does not warrant the refrigerant used in its equipment. For example, if the refrigerant is lost during the course of ordinary service to this machine, Taylor has no obligation to either supply or provide its replacement either at billable or unbillable terms. Taylor does have the obligation to recommend a suitable replacement if the original refrigerant is banned, obsoleted, or no longer available during the five year warranty of the compressor.

The Taylor Company will continue to monitor the industry and test new alternates as they are being developed. Should a new alternate prove, through our testing, that it would be accepted as a drop-in replacement, then the above disclaimer would become null and void. To find out the current status of an alternate refrigerant as it relates to your compressor warranty, call the local Taylor Distributor or the Taylor Factory. Be prepared to provide the Model/Serial Number of the unit in question.

Section 3 Safety

We, at Taylor Company, are concerned about the safety of the operator when he or she comes in contact with the freezer and its parts. Taylor has gone to extreme efforts to design and manufacture built- in safety features to protect both you and the service technician. As an example, warning labels have been attached to the freezer to further point out safety precautions to the operator.

IMPORTANT - Failure to adhere to the following safety precautions may result in severe personal injury or death. Failure to comply with these warnings may damage the machine and its components. Component damage will result in part replacement expense and service repair expense.

DO NOT operate the freezer without reading this Operator Manual. Failure to follow this instruction may result in equipment damage, poor freezer performance, health hazards, or personal injury.

This appliance is to be used only by trained personnel. It is not intended for use by children or people with reduced physical, sensory, or mental capabilities, or lack of experience and knowledge, unless given supervision or instruction concerning the use of the appliance by a person responsible for their safety.

This unit is provided with an equipotential grounding lug that is to be properly attached to the rear of the frame by the authorized installer. The installation location is marked by the equipotential bonding symbol (5021 of IEC 60417-1) on both the removable panel and the equipment's frame.

DO NOT use a water jet to clean or rinse the freezer. Failure to follow these instructions may result in serious electrical shock.

- **DO NOT** operate the freezer unless it is properly grounded.
- **DO NOT** operate the freezer with larger fuses than specified on the freezer data label.
- All repairs must be performed by an authorized Taylor service technician.
- The main power supplies to the machine must be disconnected prior to performing any repairs.
- Cord Connected Units: Only Taylor authorized service technicians may install a plug on this unit.
- Stationary appliances which are not equipped with a power cord and a plug or another device to disconnect the appliance from the power source must have an all-pole disconnecting device with a contact gap of at least 3 mm installed in the external installation.
- Appliances that are permanently connected to fixed wiring and for which leakage currents may exceed 10 mA, particularly when disconnected or not used for long periods, or during initial installation, shall have protective devices such as a GFI, to protect against the leakage of current, installed by the authorized personnel to the local codes.
- Supply cords used with this unit shall be oil-resistant, sheathed flexible cable not lighter than ordinary polychloroprene or other equivalent synthetic elastomer-sheathed cord (Code designation 60245 IEC 57) installed with the proper cord anchorage to relieve conductors from strain, including twisting, at the terminals and protect the insulation of the conductors from abrasion.

  If the supply cord is damaged, it must be replaced by an authorized Taylor service technician in order to avoid a hazard.

Failure to follow these instructions may result in electrocution. Contact your local authorized Taylor Distributor for service.

130819

- **DO NOT** allow untrained personnel to operate this machine.
- **DO NOT** put objects or fingers in door spout.
- **DO NOT** operate the freezer unless all service panels and access doors are restrained with screws.
- **DO NOT** remove any internal operating parts (example: freezer door, beater, scraper blades, etc.) unless all control switches are in the OFF position.

Failure to follow these instructions may result in contaminated product or severe personal injury to fingers or hands from hazardous moving parts.

This unit has many sharp edges that can cause severe injuries.

- **DO NOT** put objects or fingers in the door spout. This may contaminate the product and cause severe personal injury from blade contact.
- **USE EXTREME CAUTION** when removing the beater asssembly. The scraper blades are very sharp.

Failure to follow these instructions may result in electrocution or damage to the machine. Contact your local authorized Taylor Distributor for service.

This freezer must be placed on a level surface. Failure to comply may result in personal injury or equipment damage.

Cleaning and sanitizing schedules are governed by your state or local regulatory agencies and must be followed accordingly. Please refer to the cleaning section of this manual for the proper procedure to clean this unit.

Access to the service area of the unit must be restricted to persons having knowledge and practical experience with the unit, in particular as far as safety and hygiene are concerned.

DO NOT run the unit without product. Failure to follow this instruction can result in damage to the unit.

DO NOT obstruct air intake and discharge openings:

Counter Model: 6” (152 mm) minimum air space on both sides and 0” on the rear.
Console Models: 3” (76 mm) minimum air space on all sides.

Failure to follow this instruction may cause poor freezer performance and damage to the machine.

These freezers are designed to operate indoors, under normal ambient temperatures of 70°-75°F (21°-24°C). The freezers have successfully performed in high ambient temperatures of 104°F (40°C) at reduced capacities.

NOISE LEVEL: Airborne noise emission does not exceed 78 dB(A) when measured at a distance of 1.0 meter from the surface of the machine and at a height of 1.6 meters from the floor.

Section 4 Operator Parts Identification

Model 750

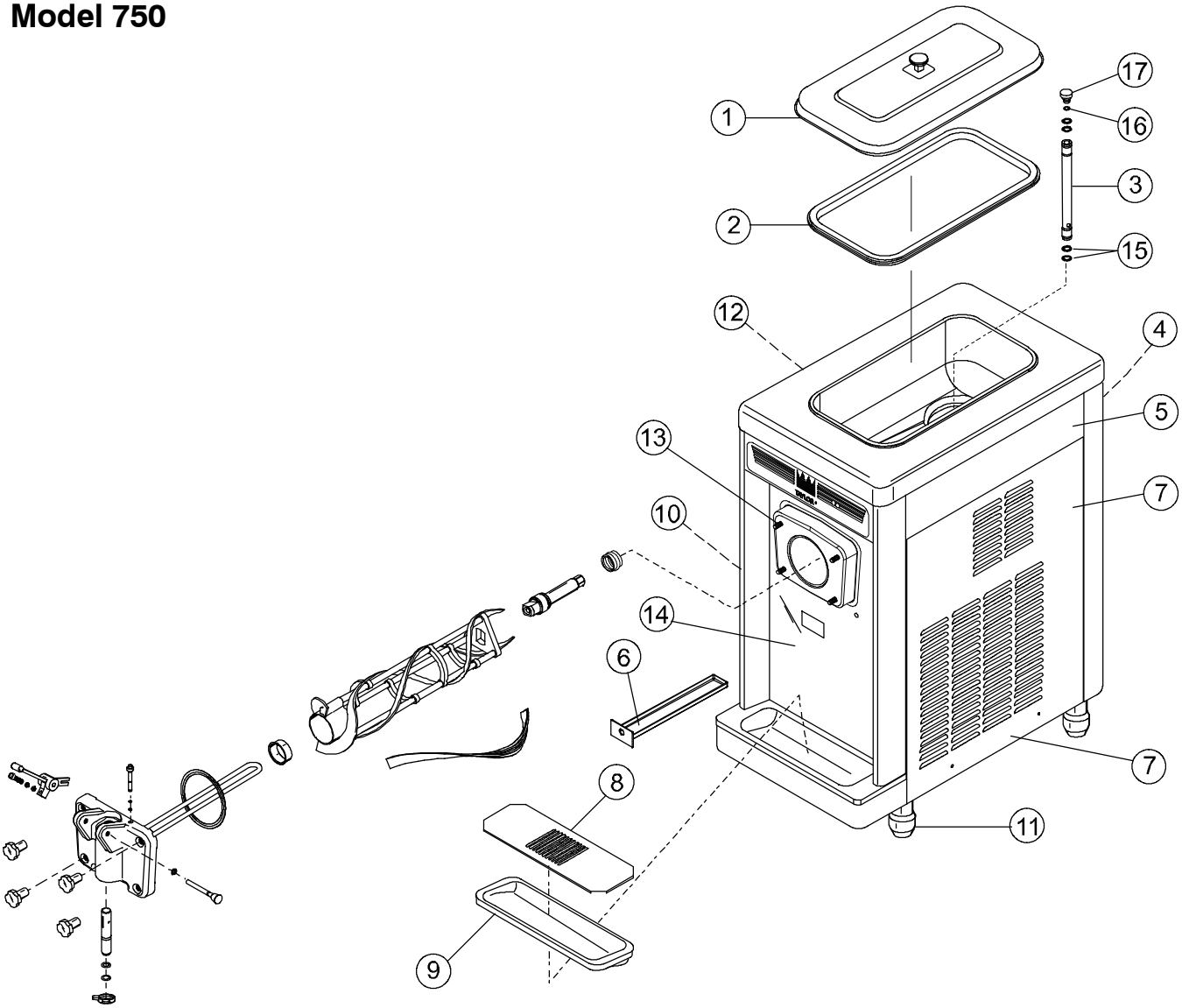

Item	Description	Part No.
1	Cover A.- Hopper	X38458- SER
2	Gasket- Hopper Cover	038375
3	Tube A.- Feed	X29429- 2
4	Panel- Rear	020891
5	Panel- Upper Side Right	042317
6	Pan- Drip	050766
7	Panel- Right Side	050742
8	Shield- Splash	022763
9	Tray- Drip	013690

Item	Description	Part No.
10	Panel- Side Left	050741
11	Leg- 4” SS w/O- Ring	013458
12	Louver- Side	051192
13	Stud- Nose Cone	022822
14	Panel A.- Front	X50754
15	O- Ring- .643 OD x .077 W	018572
16	O- Ring- 3/8 OD x .070 W	016137
17	Orifice	022465- 100

101217

Model 751

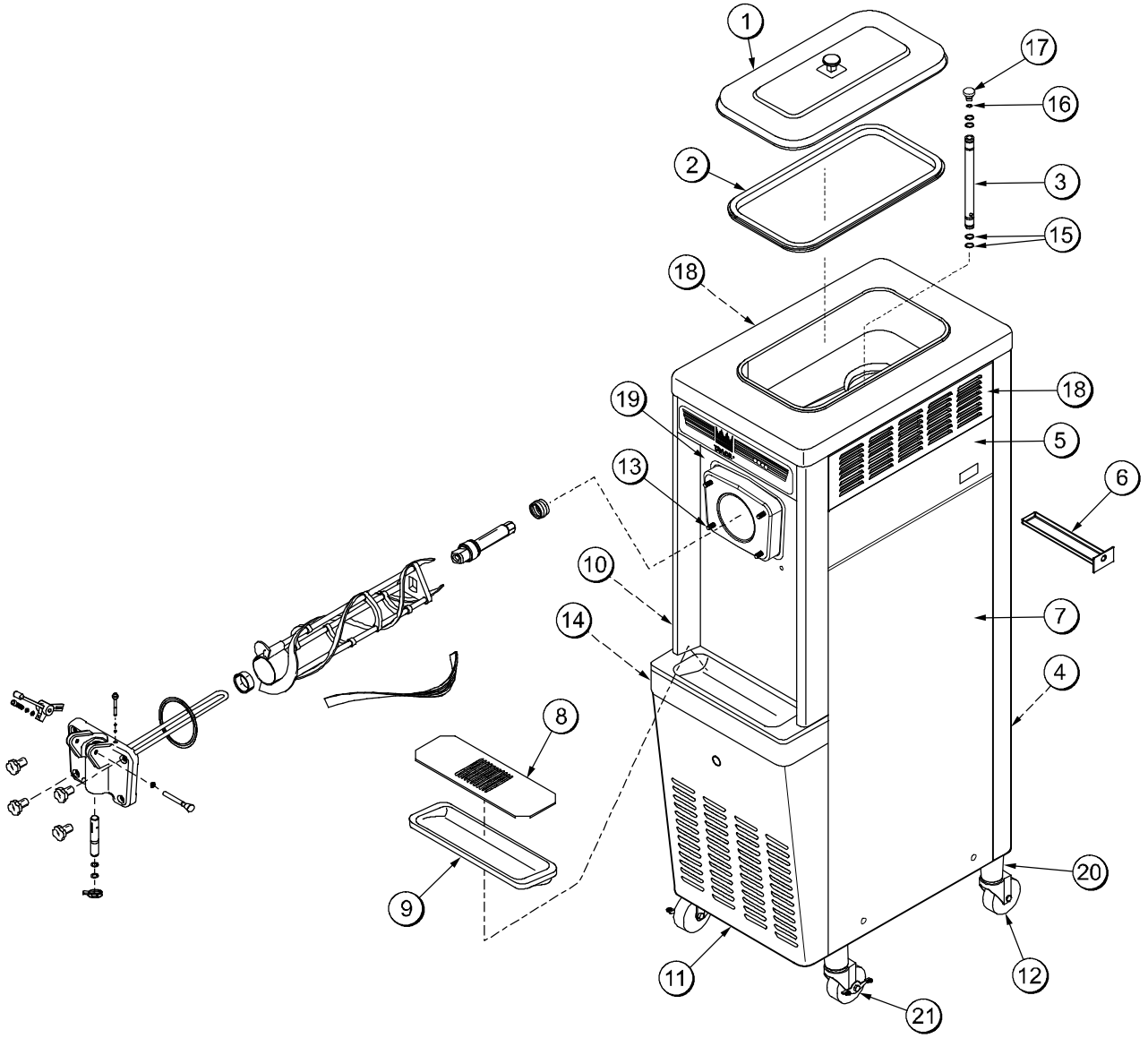

Item	Description	Part No.
1	Cover A.- Hopper	X38458- SER
2	Gasket- Hopper Cover	038375
3	Tube A.- Feed	X29429- 2
4	Panel- Rear	013637
5	Panel- Upper Side Right	028823
6	Pan- Drip 11- 5/8 Long	027503
7	Panel A.- Lower Side Right	X24424- SER
8	Shield- Splash	022763
9	Tray- Drip 14- 7/8 x 5- 1/8	013690
10	Panel- Upper Side	024426
11	Panel- Service	047170

Item	Description	Part No.
12	Caster- Swivel	018794
13	Stud- Nose Cone	022822
14	Panel A.- Side- Lower	X39075- SER
15	O- Ring- .643 OD x .077 W	018572
16	O- Ring- 3/8 OD x .070 W	016137
17	Orifice	022465- 100
18	Louver- Side- Top	051191
19	Panel A.- Front	X33237
20	Adaptor A.- Caster	X18915
21	Caster- 4” Swivel 5/8” Stem w/Brake	034081

111101

Model 754

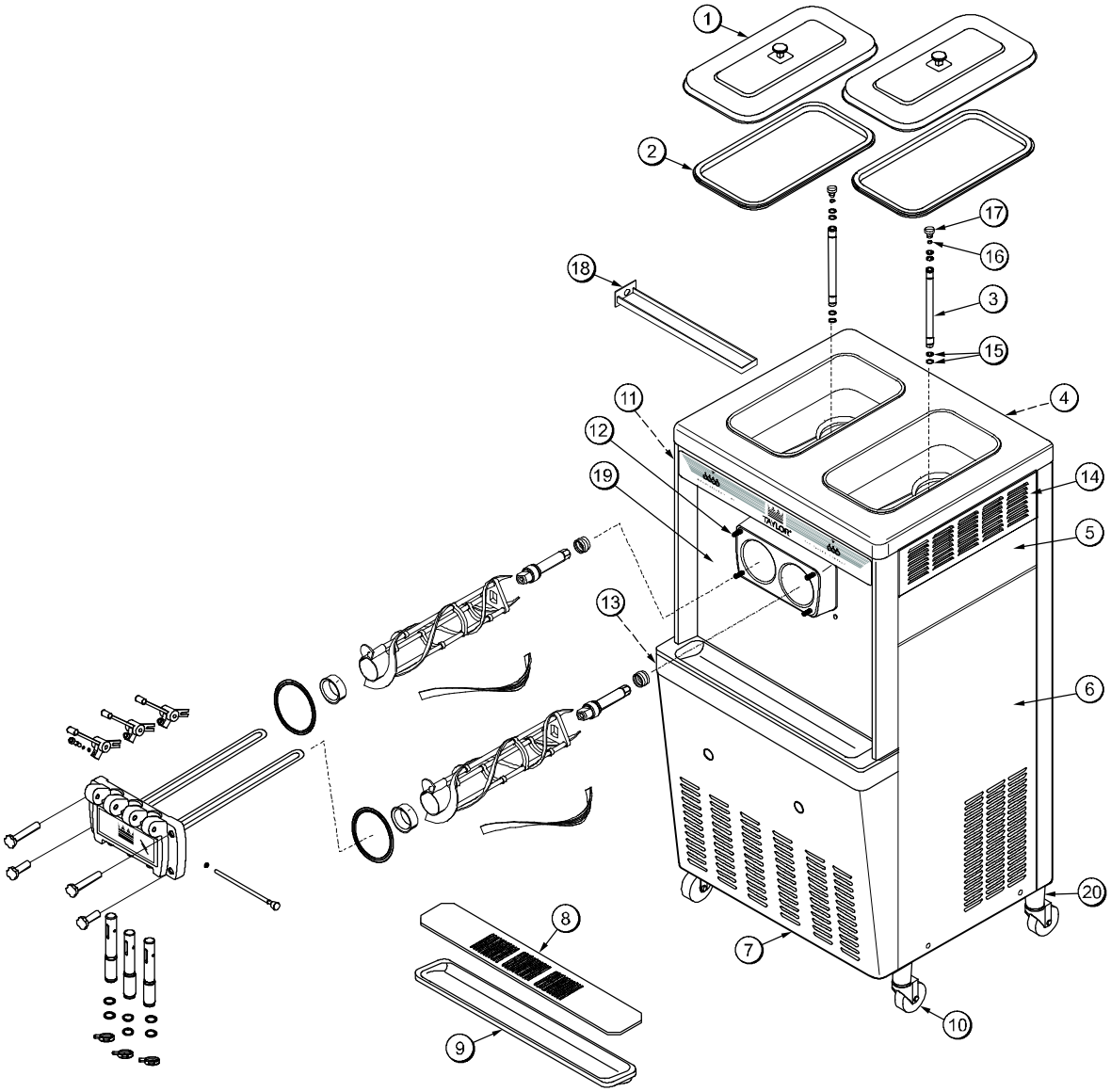

Item	Description	Part No.
1	Cover A.- Hopper	X38458- SER
2	Gasket- Hopper Cover	038474
3	Tube A.- Feed	X29429- 2
4	Panel- Rear	053782
5	Panel- Upper Side Right	028823
6	Panel A.- Side Lower Right	X46448- SER
7	Panel- Service	046584
8	Shield- Splash	022766
9	Tray- Drip	014533
10	Caster- Swivel	018794

Item	Description	Part No.
11	Panel- Upper Side Left	028822
12	Stud- Nose Cone	022822
13	Panel A.- Side Lower Left	X46447- SER
14	Louver- Side- Top	051191
15	O- Ring- .643 OD x .077 W	018572
16	O- Ring- 3/8 OD x .070 W	016137
17	Orifice	022465- 100
18	Pan- Drip 17- 1/4” Long	027504
19	Panel A.- Front	X32956
20	Adaptor A.- Caster	X18915

Model 774

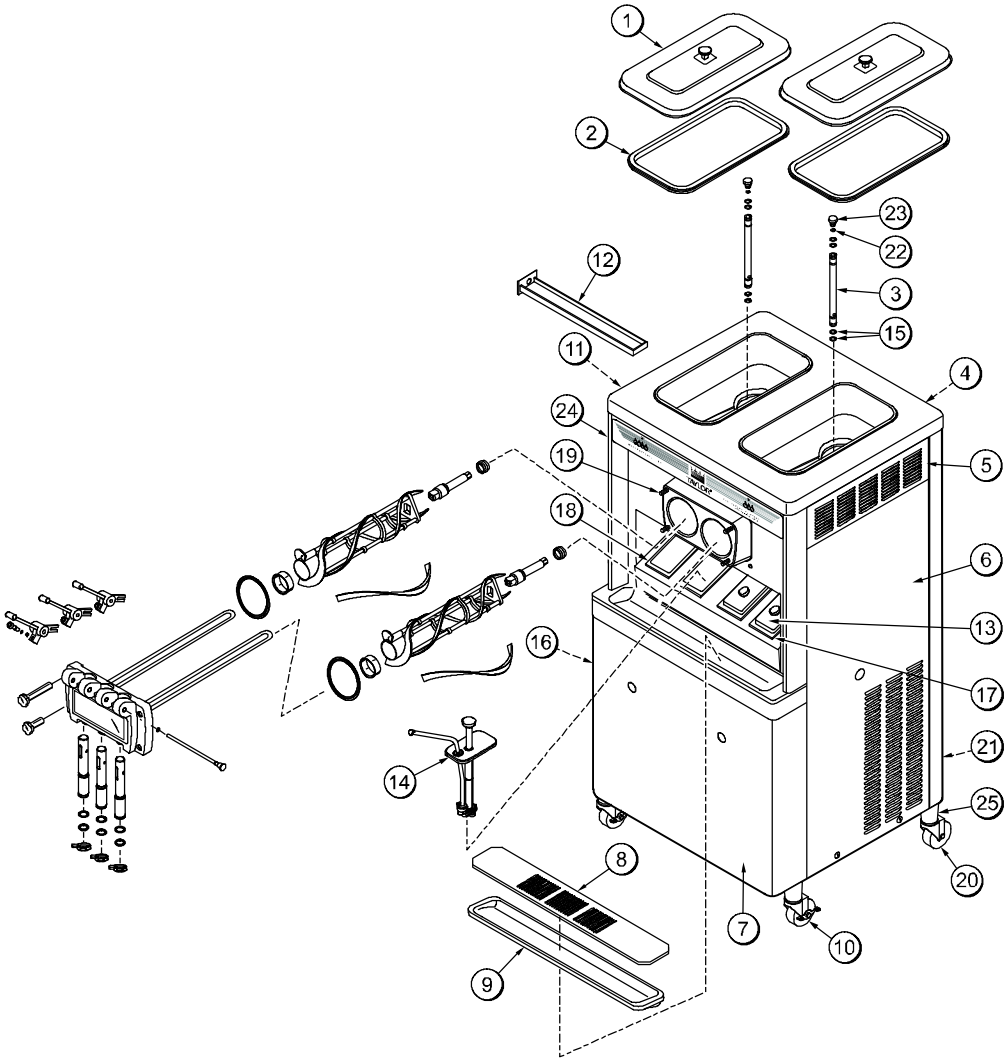

Item	Description	Part No.
1	Cover A.- Hopper	X38458- SER
2	Gasket- Hopper Cover 20 Qt.	038474
3	Tube A.- Feed	X29429- 2
4	Panel- Upper Rear Inactive	X42574
5	Louver- Side- Top	051191
6	Panel A.- Side Lower- Right	X46448- SER
7	Panel- Service	047077
8	Shield- Splash	022766
9	Tray- Drip	014533
10	Caster- 4” Swivel 5/8 Stem/Brake	034081
11	Panel- Upper Side Left	028822
12	Pan- Drip 17- 1/4” Long	027504
13	Lid with Ladle 1 oz.	036575

Item	Description	Part No.
14	Pump A.- Syrup- Tan	053794- TAN
15	O- Ring- .643 OD x .077 W	018572
16	Panel A.- Side Lower- Left	X46447- SER
17	Jar- Syrup- Plastic Shallow	036573
18	Jar- Syrup- Stainless- Shallow	036574
19	Stud- Nose Cone	022822
20	Caster- 4” Swivel 5/8” Stem	018794
21	Panel- Lower Rear Inactive	053837
22	O- Ring- 3/8 OD x .070 W	016137
23	Orifice	022465- 100
24	Panel A.- Front- Syrup Inactive	X42539
25	Adaptor A.- Caster	X18915

Model 774 Topping Pump (053794-)

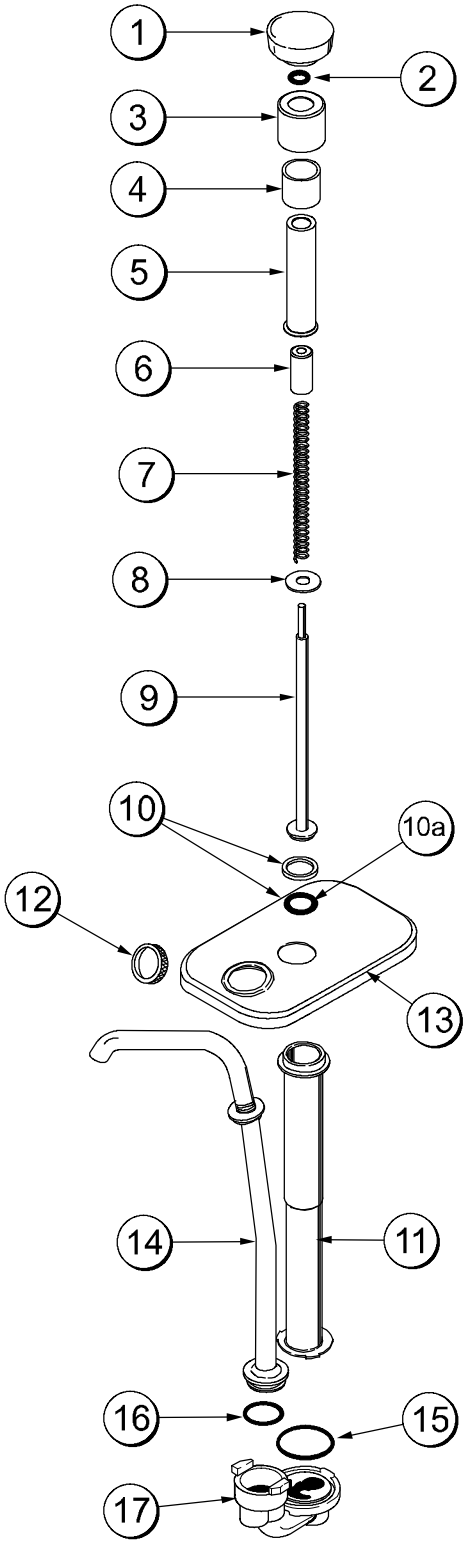

ITEM	DESCRIPTION	PART NO.
1	Knob-Plunger-Tan	032762-TAN
1	Knob-Plunger-Brown	032762-BRN
1	Knob-Plunger-Red	032762-RED
2	O-Ring-9/16 OD x .103 W	016369
3	Nut-Plunger	036577
4	Collar-Gaging 1/2 Ounce	035514
5	Tube-Plunger	032757
6	Insert-Plunger	032758
7	Spring-Plunger	032761
8	Washer-Nylon	032760
9	Plunger	036578
10	Seal Assembly	X33057
10a	O-Ring-13/16 OD x .103 W	019330
11	Body-Syrup Pump	047934
12	Nut-Spout	036821
13	Lid-Pump	036822
14	Tube-Discharge	050912
15	O-Ring-1-5/16 OD x .103 W	048149
16	O-Ring-1 OD x .103 W	048148
17	Kit-Valve-Captured Ball Shallow	048166-001
	Includes:	
	1 - Body A.-Pump Valve	
	1 - O-Ring-1-5/16 OD x .103W (048149)	
	1 - Brush-cleaning (054068)	
	1 - Instruction Sheet-Installation/Cleaning	

Model 791

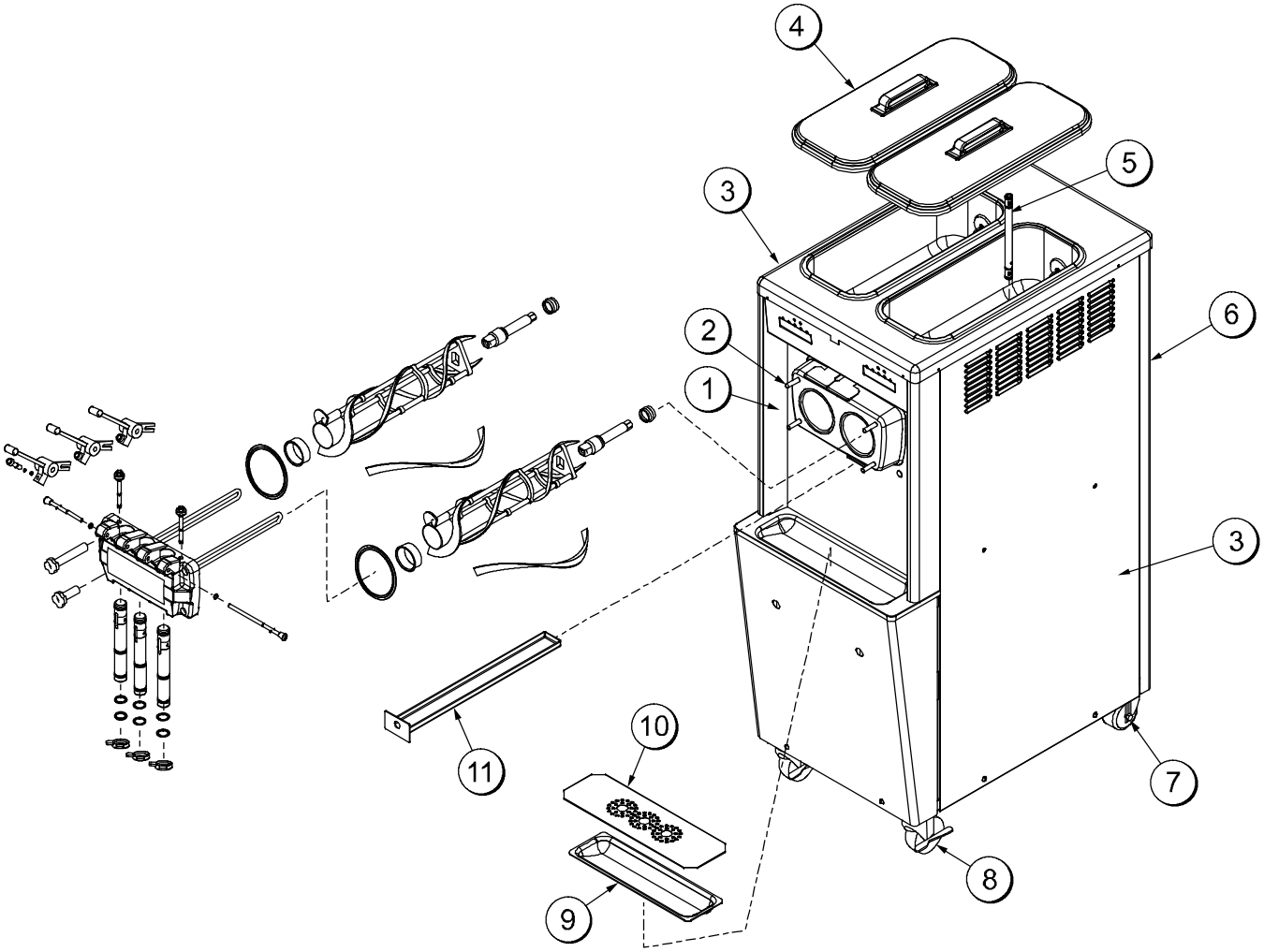

ITEM	DESCRIPTION	PART NO.
1	PANEL A.- FRONT	X41820- SP3
2	STUD- NOSE CONE	068410
3	PANEL- SIDE	069038
4	KIT A.- COVER- HOPPER	X68150
5	TUBE A.- FEED- SS- 5/32	X29429- 2
6	PANEL- REAR	041855

ITEM	DESCRIPTION	PART NO.
7	CASTER- 4” SWV 5/8 STEM	018794
8	CASTER- 4” SWV 5/8 STEM W/BRAKE	034081
9	TRAY- DRIP 16- 7/8L X 5- 1/8	020157
10	SHIELD- SPLASH	022765
11	PAN- DRIP 19- 1/2 LONG	035034

Model 794

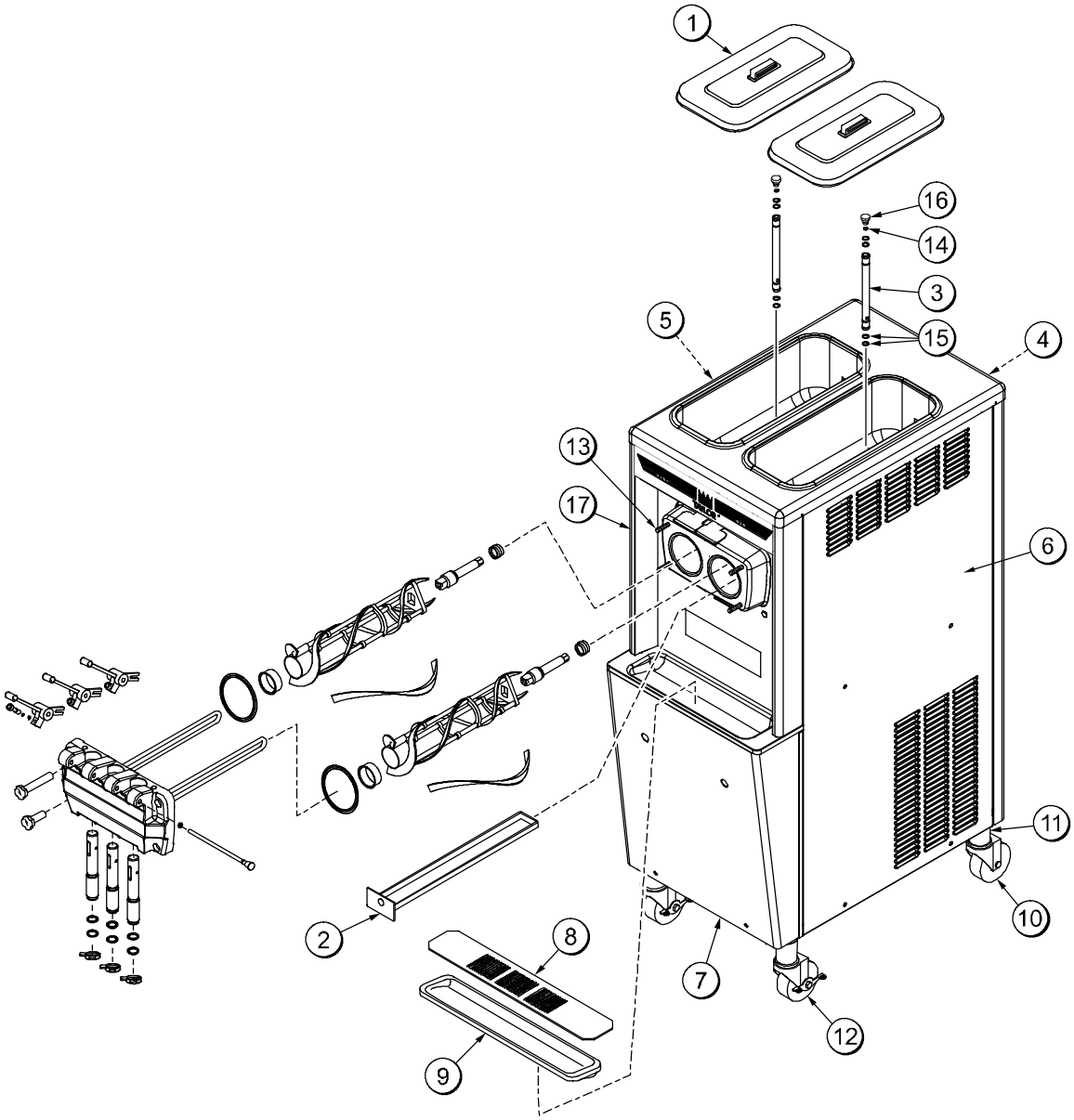

ITEM	DESCRIPTION	PART NO.
1	COVER- HOPPER- 14 QT	041682- GRY
2	PAN- DRIP 19 1/2 LONG	035034
3	TUBE A.- FEED	X29429- 2
4	PANEL- REAR	041855
5	PANEL- SIDE *LEFT	068691
6	PANEL- SIDE *RIGHT	068692
7	PANEL- SERVICE	064000
8	SHIELD- SPLASH	022765
9	TRAY- DRIP	021057

ITEM	DESCRIPTION	PART NO.
10	CASTER- 4” SWV 5/8 STEM	018794
11	ADAPTOR A.- CASTER	X18915
12	CASTER- 4” SWV 5/8 STEM W/BRAKE	034081
13	STUD- NOSE CONE	022822
14	O- RING- 3/8 OD X .070W	016137
15	O- RING- .643 OD X .077W	018572
16	ORIFICE	022465- 100
17	PANEL A.- FRONT	X41820- SP3

130508

Models 750 & 751 Single Spout Door and Beater Assembly

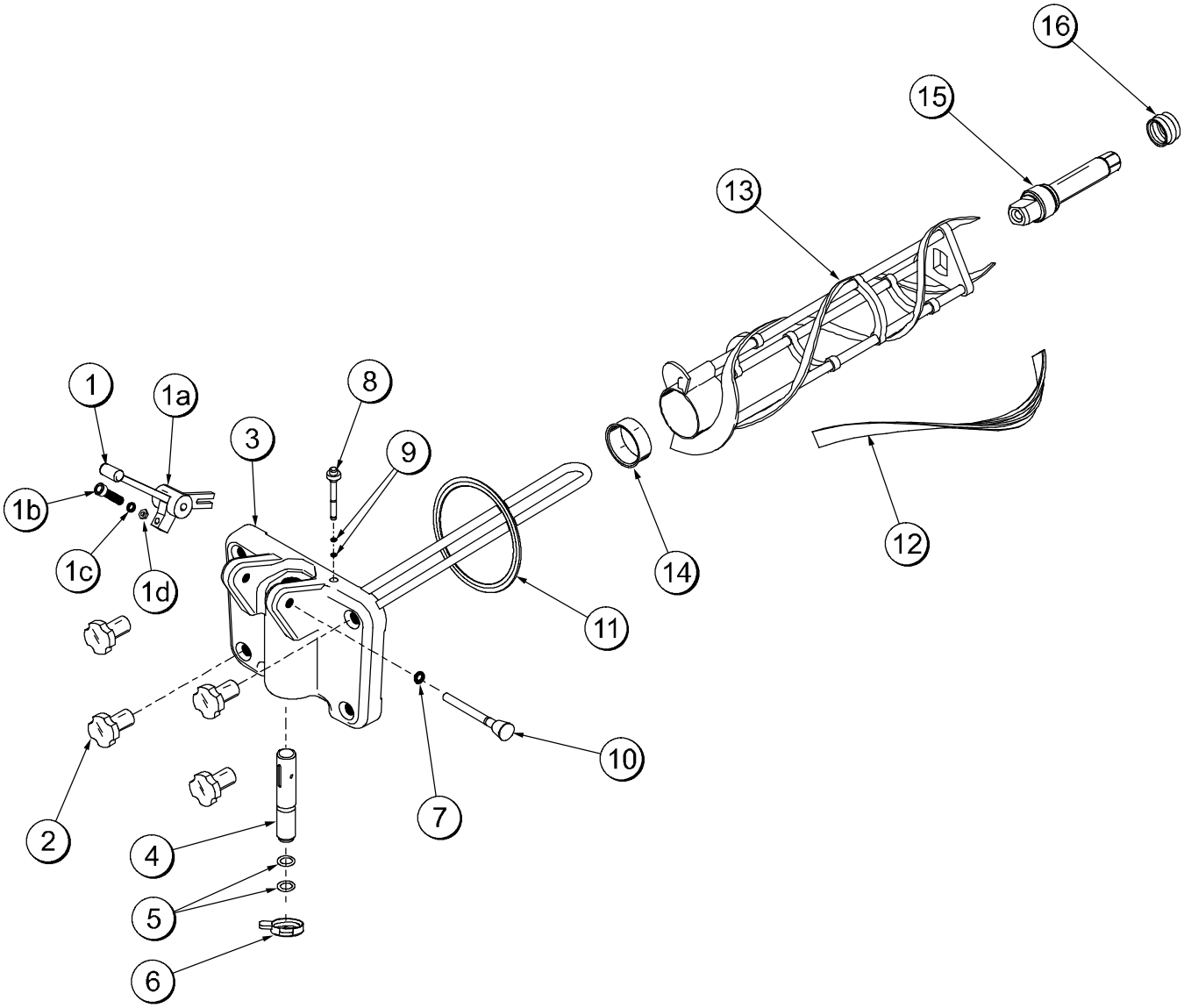

ITEM	DESCRIPTION	PART NO.
1	HANDLE A.- DRAW	X55096
1a	DRAW HANDLE	028804
1b	SCREW-ADJUST	055092
1c	O-RING 1/4OD X .070W	015872
1d	NUT-JAM	029639-BLK
2	NUT-STUD FLAT LONG	021508
3	DOOR A.- 1-SPOUT	X51531-10
4	VALVE A.- DRAW	X18303
5	O-RING 7/8OD X .070W	014402
6	CAP-DESIGN	014218

ITEM	DESCRIPTION	PART NO.
7	O-RING 5/16OD X .070W	016272
8	PLUG-PRIME	028805
9	O-RING-PRIME PLUG	016137
10	PIN A.- PIVOT	X22820
11	GASKET-DOOR HT 4”	048926
12	BLADE- SCRAPER	035174
13	BEATER A.- HELICORE	X31761
14	BEARING-FRONT	050216
15	SHAFT-BEATER	032564
16	SEAL-DRIVE SHAFT	032560

Models 754, 774 & 794 Three Spout Door and Beater Assembly

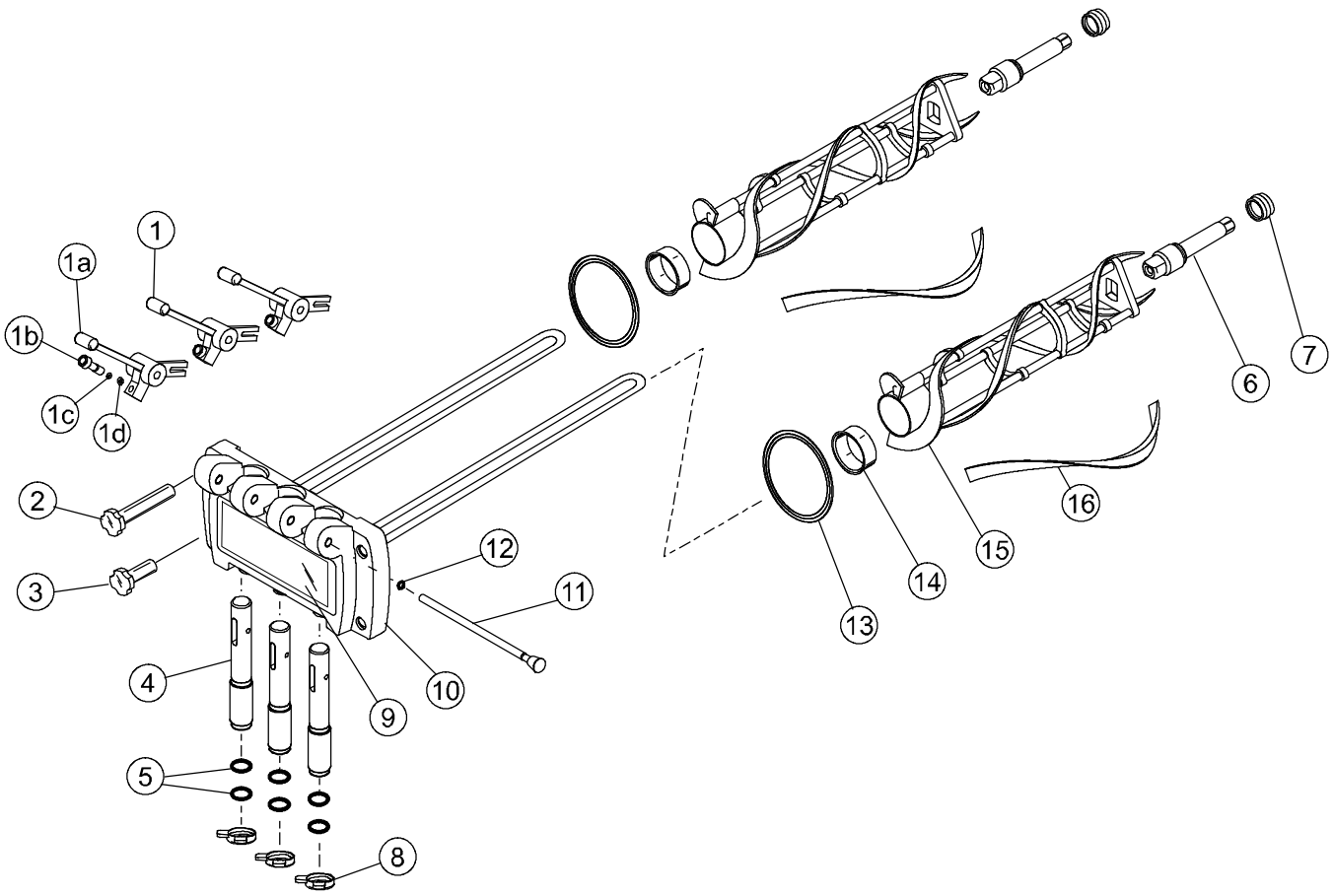

Item	Description	Part No.
1	Handle A.- Draw	X55096
1a	Draw Handle	028804
1b	Screw- Adjustment	055092
1c	O- Ring 1/4 OD x .070 W	015872
1d	Nut- Jam	029639- BLK
2	Nut- Stud Long	034382
3	Nut- Stud Short	034383
4	Valve A.- Draw	X18303
5	O- Ring 7/8 OD x .070 W	014402
6	Shaft- Beater	032564

Item	Description	Part No.
7	Seal- Drive Shaft	032560
8	Cap- Design	014218
9	Decal- Door	021521
10	Door A.- 3 Spout	X51532- 12
11	Rod A.- Pivot	X20683
12	O- Ring 5/16 OD x .070 W	016272
13	Gasket- Door HT 4”	048926
14	Bearing- Front	050216
15	Beater A.- Helicore	X31761
16	Blade- Scraper	035174

Model 791 Three Spout Door and Beater Assembly

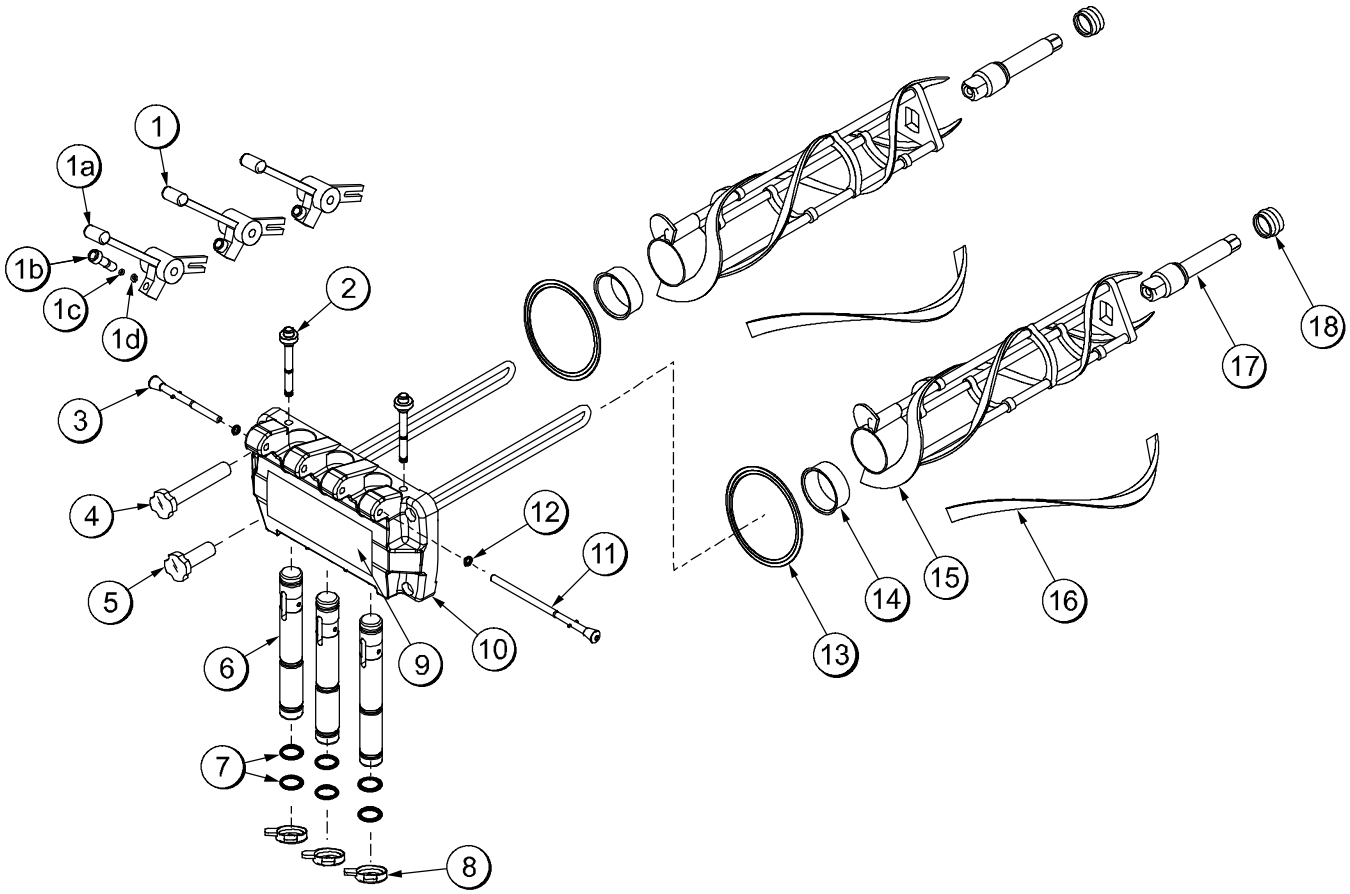

ITEM	DESCRIPTION	PART NO.
1	HANDLE A.- DRAW	X55096
1a	DRAW HANDLE	028804
1b	SCREW- ADJUST	055092
1c	O- RING 1/4OD X .070W	015872
1d	NUT- JAM	029639- BLK
2	PLUG- PRIME	028805
3	ROD A.- PIVOT	X22388
4	NUT- STUD LONG	034382
5	NUT- STUD SHORT	034383
6	VALVE A.- DRAW	X69539
7	O- RING 7/8OD X .070W	014402

ITEM	DESCRIPTION	PART NO.
8	CAP- DESIGN	014218
9	DECAL- DOOR	021521
10	DOOR A.- 3- SPOUT	X49461- 4
11	ROD A.- PIVOT	X22387
12	O- RING 5/16OD X .070W	016272
13	GASKET- DOOR HT 4”	048926
14	BEARING- FRONT	050216
15	BEATER A.- HELICORE	X31761
16	BLADE- SCRAPER	035174
17	SHAFT- BEATER	032564
18	SEAL- DRIVE SHAFT	032560

120124

Accessories

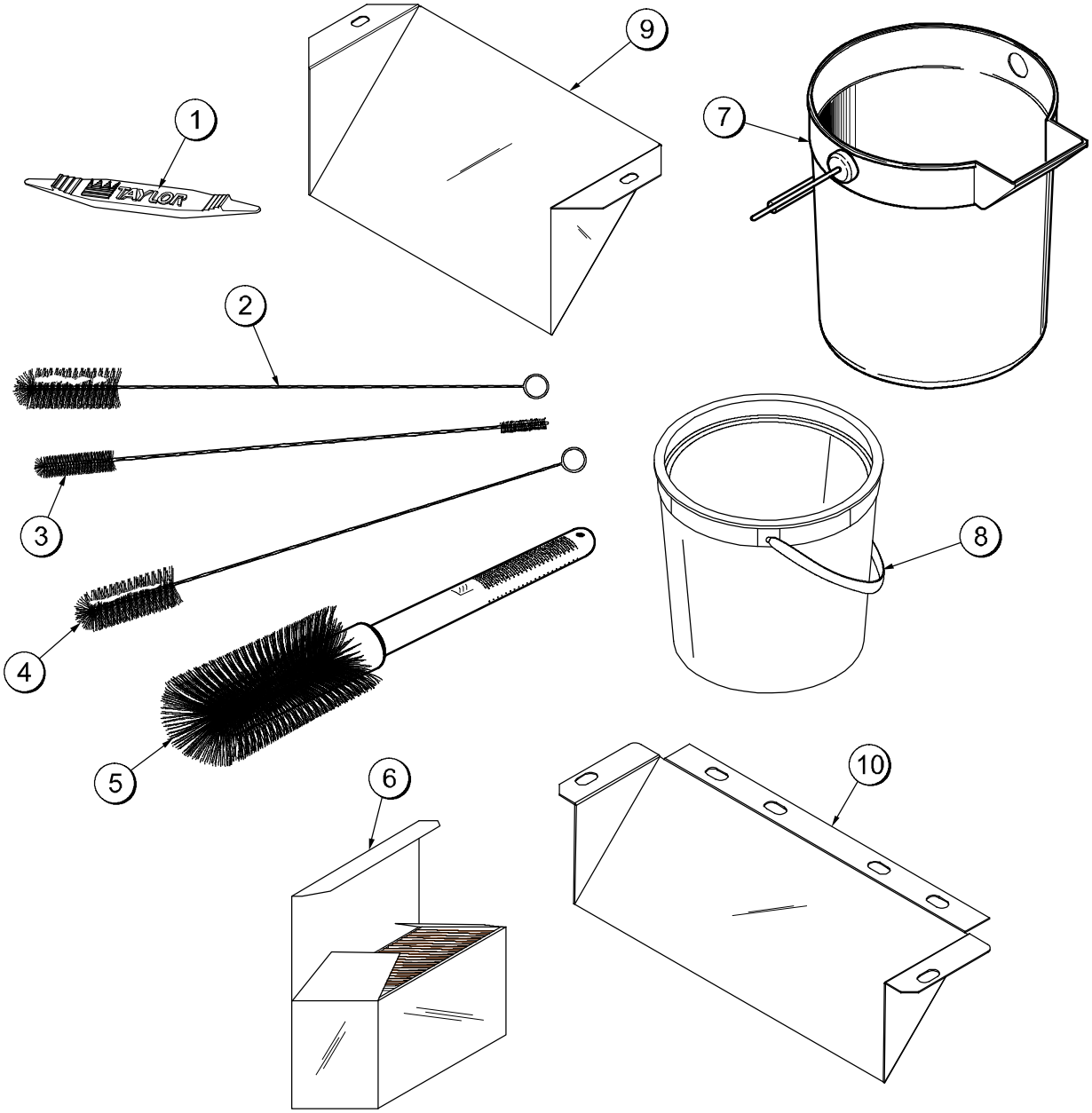

Item	Description	Part No.
1	Tool- O- Ring Removal	048260- WHT
2	Brush- Rear Bearing 1” D x 2”L	013071
3	Brush- Double Ended	013072
4	Brush- Draw Valve 1” x 2” x 17”	013073
5	Brush- Mix Pump Body 3” x 7” White	023316
*6	Sanitizer- Stera Sheen Green	See note

Item	Description	Part No.
7	Pail- 10 Qt. (751, 754, 774, 791, 794)	013163
8	Pail- 6 Qt. (750)	023348
9	Deflector- Blower Exhaust (794)	047912
10	Deflector- Blower Exhaust (751, 754, 774)	046586

****Note:** A sample container of sanitizer is sent with the unit. For reorders, order Stera Sheen part no. 055492 (100 2 oz. packs) or Kay- 5 part no. 041082 (200 packs).

Section 5 Important: To the Operator

750/751

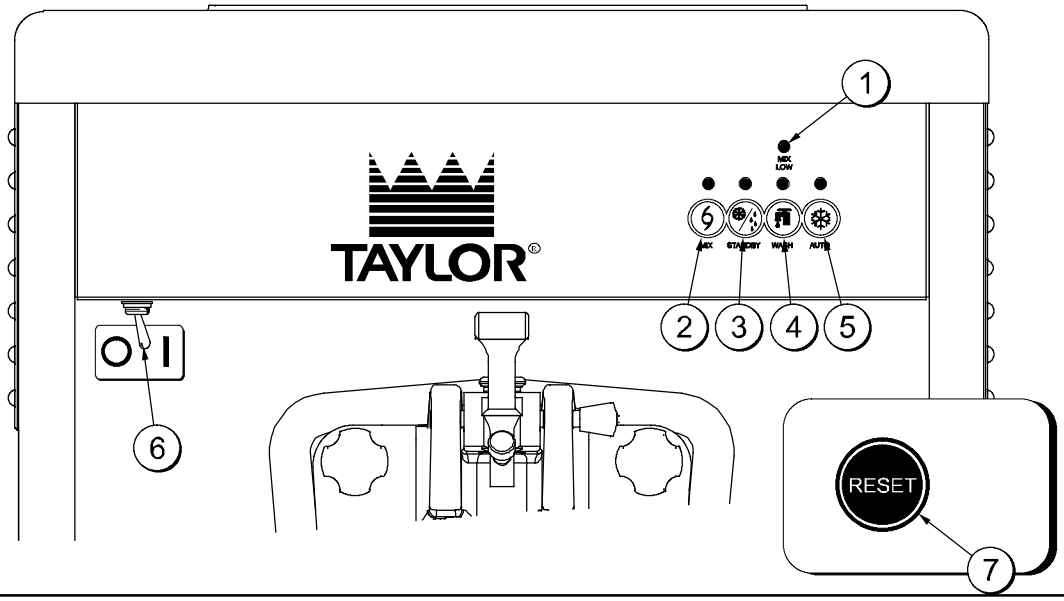

754/774/791/794

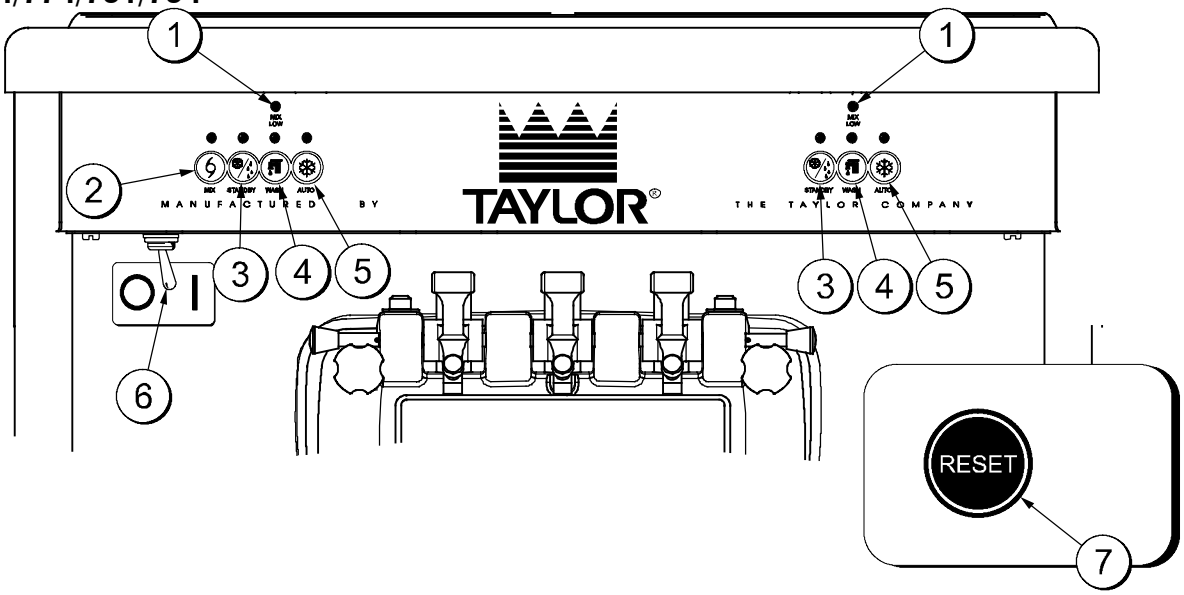

ITEM	DESCRIPTION
1	MIX LOW INDICATOR LIGHT
2	MIX REFRIGERATION KEY
3	STANDBY KEY
4	WASH KEY
5	AUTO KEY
6	POWER ON/OFF (TOGGLE)
7	RESET BUTTON

Symbol Definitions

To better communicate in the International arena, the words on many of our operator switches and keys have been replaced with symbols to indicate their functions. Your Taylor equipment is designed with these International symbols.

The following chart identifies the symbol definitions.

= OFF

= ON

= MIX

= STANDBY

= WASH

= AUTO

Power Switch

When placed in the ON position, the power switch allows SOFTECH control panel operation.

MIX LOW Indicator Light

Located on the front of the machine is a mix level indicating light. When the light is flashing, it indicates that the mix hopper has a low supply of mix and should be refilled as soon as possible. Always maintain at least 3” (7.6 cm) of mix in the hopper. If you neglect to add mix, a freeze-up may occur. This will cause eventual damage to the beater, blades, drive shaft, and freezer door.

MIX REF Key

When the MIX REF key is pressed, the light comes on indicating the mix hopper refrigeration system is operating. For the Models 754, 774, 791, and 794 the MIX REF is controlled by the left side of the freezer as viewed from the operator end. The MIX REF function cannot be cancelled unless the AUTO or STANDBY modes are cancelled first.

STANDBY Key

The Separate Hopper Refrigeration System (SHR) and the Cylinder Temperature Retention System (CTR) are standard features on these machines. The SHR incorporates the use of a separate small refrigeration system to maintain the mix in the hopper below 40°(4.4°C) to assure bacteria control. The CTR works with the SHR to maintain a good quality product.

During long “No Sale” periods, it is necessary to warm the product in the freezing cylinder to approximately 35°F to 40°F (1.7°C to 4.4°C) to prevent overbeating and product breakdown.

To activate the SHR and CTR, press the STANDBY key. Remove the air orifice and place the air tube (**end without the hole**) into the mix inlet hole.

IMPORTANT: Make sure the level of mix in the hopper is below the mix delivery hole in the feed tube. Failure to follow this instruction may result in lower product quality when normal operation is resumed.

When the STANDBY key is pressed, the light comes on, indicating the CTR (Cylinder Temperature Retention System) has been activated. In the STANDBY mode, the WASH and AUTO functions are automatically cancelled. The MIX REF function is automatically locked in to maintain the mix in the hopper.

To resume normal operation, press the AUTO key. When the unit cycles off, the product in the freezing cylinder will be at serving viscosity. At this time, place the air tube (**end with the hole**) into the mix inlet hole and install the air orifice.

WASH Key

When the WASH key is pressed, the light comes on. This indicates beater motor operation. The STANDBY or AUTO modes must be cancelled first to activate the WASH mode.

AUTO Key

When the AUTO key is pressed, the light comes on. This indicates that the main refrigeration system has been activated. In the AUTO mode, the WASH or STANDBY functions are automatically cancelled. The MIX REF function is automatically locked in to maintain the mix in the mix hopper.

Note: An indicating light and an audible tone will sound whenever a mode of operation has been pressed. To cancel any function, press the key again. The light and mode of operation will shut off.

Reset Button

On counter models, the reset button is located on the side of the unit. On console models, the reset button is located in the service panel. The reset protects the beater motor from an overload condition. If an overload occurs, the reset mechanism will trip. To properly reset the freezer, press the AUTO key to cancel the cycle. Turn the power switch to the OFF position. Press the reset button firmly.

Do not use metal objects to press the reset button. Failure to follow this instruction may result in electrocution.

Turn the power switch to the ON position. Press the WASH key and observe the freezer's performance. Open the side access panel. Make sure the beater motor is turning the drive shaft in a clockwise direction (from the operator end) without binding.

If the beater motor is turning properly, press the WASH key to cancel the cycle. Press the AUTO key to resume normal operation. If the freezer shuts down again, contact a service technician. (For Models 754, 774, 791, and 794 press the AUTO key on both sides of the unit to resume normal operation.)

Air Tube

The air tube serves two purposes. One end of the tube has a hole and the other end does not.

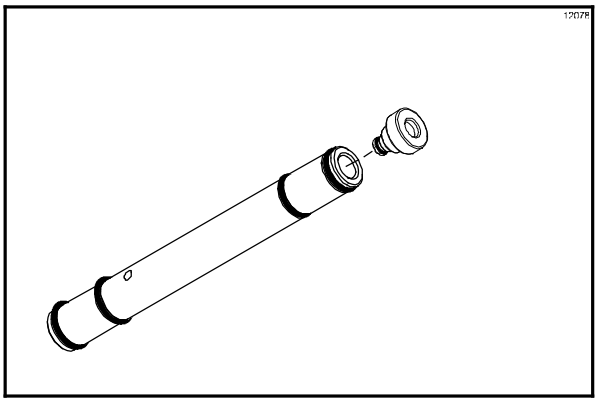

Figure 1

1. After priming the machine, lubricate the o- rings on the air tube (**the end with the hole**) and place it into the mix inlet hole. Every time the draw handle is raised, new mix and air from the hopper will flow down into the freezing cylinder. This will keep the freezing cylinder properly loaded and will maintain overrun.
2. During long "No Sale" periods, remove the air orifice. Lubricate the o- rings on the air tube (**the end without the hole**), and place it into the mix inlet hole. This will prevent any mix from entering the freezing cylinder.

   IMPORTANT: Make sure the level of mix in the hopper is below the mix delivery hole in the feed tube. Failure to follow this instruction may result in lower product quality when normal operation is resumed.

   The air orifice is used to meter a certain amount of air into the freezing cylinder. The air orifice maintains overrun and allows enough mix to enter the freezing cylinder after a draw.

Adjustable Draw Handle

These units feature an adjustable draw handle to provide the best portion control. The draw handle should be adjusted to provide a flow rate of 5 to 7- 1/2 oz. (148 to 222 ml) of product per 10 seconds. To INCREASE the flow rate, turn the screw COUNTERCLOCKWISE. Turn the screw CLOCKWISE to DECREASE the flow rate. During "Sanitizing" and "Rinsing", the flow rate can be increased by removing the pivot pin and placing the restrictive bar on the TOP. When drawing product, **always** place the restrictive bar on the bottom.

IMPORTANT! When dispensing product, pull only one draw handle at a time.

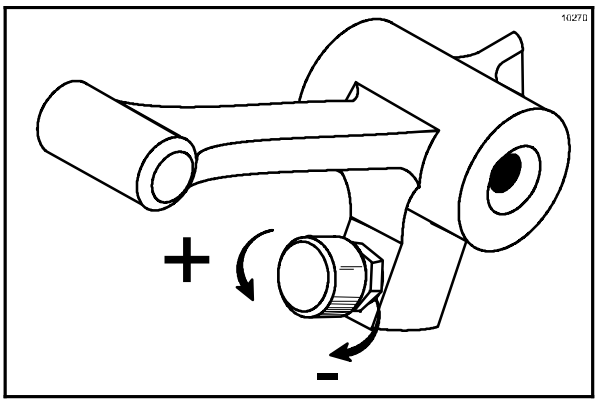

Figure 2

Note: Once the draw rate is set, tighten the lock nut with a wrench.

Section 6 Operating Procedures

The Model 751 has been selected to illustrate the step- by- step operating procedures for all models contained in this manual. These models, for all practical purposes of operation, are the same.

Each unit stores mix in a hopper. The mix then flows by **gravity** through an air tube down into the freezing cylinder. They all have 3.4 quart (3.2 liter) capacity freezing cylinders. The Models 750, 751, 754, and 774 have 20 quart (18.9 liter) mix hoppers. The Models 791 and 794 have 14 quart (13.2 liter) mix hoppers.

Duplicate the following procedures, where they apply, for the second freezing cylinder on Models 754, 774, 791, and 794.

We begin our instructions at the point where we enter the store in the morning and find the parts disassembled and laid out to air dry from the previous night's cleaning.

These opening procedures will show you how to assemble these parts into the freezer, sanitize them, and prime the freezer with fresh mix in preparation to serve your first portion.

If you are disassembling the machine for the first time or need information to get to this starting point in our instructions, turn to page 30, "Disassembly", and start there.

Prior to Set- Up (Model 774)

Step 1
Remove the two stainless syrup jars with topping pumps from the syrup rail. Check the water level in the heated syrup topping well. Make sure the water is filled to the indicating mark on the bottom of the well. The heated rail should have 32 oz. (946.2 ml) of water.

Step 2
Place the heater switch in the ON position.

Note: This heating process will take approximately 2- 1/2 hours to reach temperature. The water level in the topping wells must be checked at least once daily.

Step 3
Prepare a pail of an approved 100 PPM sanitizing solution (examples: 2- 1/2 gal. [9.5 liters] of Kay- 5® or 2 gal. [7.6 liters] of Stera- Sheen®). USE WARM WATER AND FOLLOW THE MANUFACTURER'S SPECIFICATIONS. Sanitize the topping pumps by placing the entire pump assembly in the pail of sanitizing solution. Pump the solution through the assembly to thoroughly sanitize the pump.

Step 4
Remove the two topping pumps. Fill each stainless syrup jar with topping. Replace the topping pumps in the syrup jars.

Assembly

Note: When lubricating parts, use an approved food grade lubricant (example: Taylor Lube).

MAKE SURE POWER SWITCH IS IN THE "OFF" POSITION! Failure to follow this instruction may result in severe personal injury from hazardous moving parts.

Step 1
Lubricate the groove and shaft portion that comes in contact with the bearing on the beater drive shaft. Slide the seal over the shaft and groove until it snaps into place. **DO NOT** lubricate the hex end of the drive shaft. Fill the inside portion of the seal with 1/4" more lubricant and lubricate the flat side of the seal that fits onto the rear shell bearing.

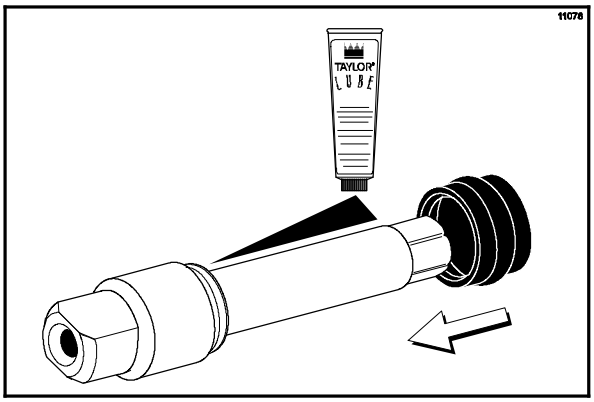

Figure 3

Insert the drive shaft into the freezing cylinder, hex end first, and into the rear shell bearing until the seal fits securely over the rear shell bearing. Engage the hex end firmly into the drive coupling. Be sure the drive shaft fits into the drive coupling without binding.

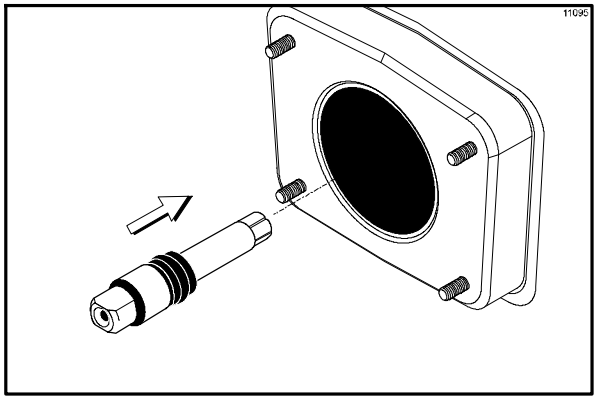

Figure 4

Step 2
Take one of the scraper blades and slip it under the hook at the front of the beater. Wrap the blade around the beater following the helix and pushing the blade down onto the helix as you wrap. At the back end of the beater, slip the blade under the hook. **Repeat this step** for the second scraper blade.

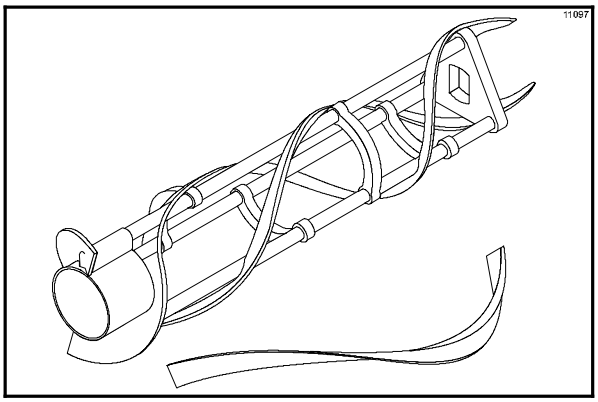

Figure 5

Holding the beater securely, slide the beater one third of the way into the freezing cylinder. Looking into the freezing cylinder, align the hole at the rear of the beater with the flats on the end of the drive shaft.

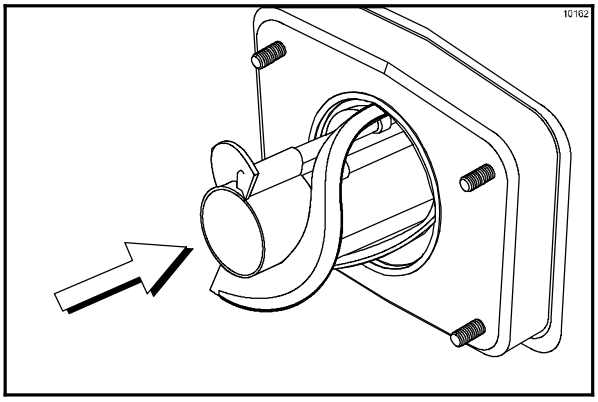

Figure 6

Slide the beater the remainder of the way into the freezing cylinder and over the end of the drive shaft. The beater should fit snugly, but not so tightly that the beater cannot be turned slightly to engage the drive shaft. If the beater slides in too easily with little or no resistance, there will not be enough force against the beater to hold the blades in place. If this is the case, contact your authorized Taylor service technician.

Repeat steps 1 and 2 for the other side of the freezer on Models 754, 774, 791, and 794.

Step 3
Place the large rubber gasket(s) into the groove(s) on the back side of the freezer door.

Slide the white plastic front bearing(s) over the baffle rod(s) onto the bearing hub(s) making certain that the flanged end of the bearing is resting against the freezer door.

Note: Do not lubricate the gasket(s) or the front bearing(s).

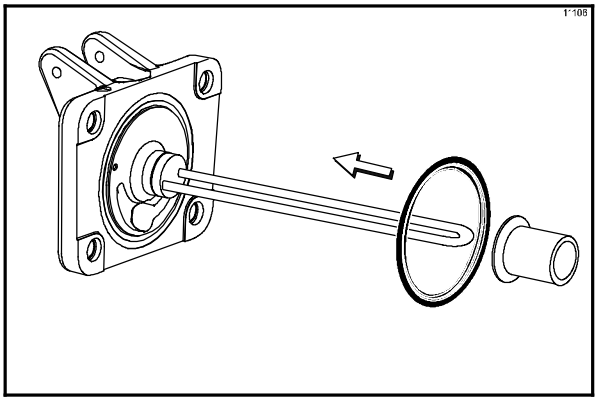

Figure 7

Note: There are two gaskets and two front bearings for the Models 754, 774, 791, and 794 door, one for each freezing cylinder.

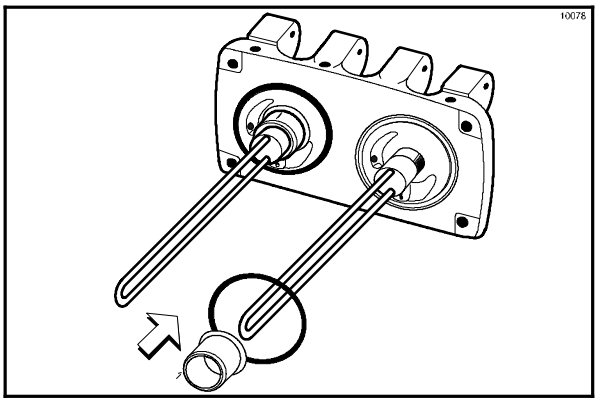

Figure 8

Slide the two o- rings into the grooves on the prime plug(s). Apply an even coat of Taylor Lube to the o- rings and shaft(s).

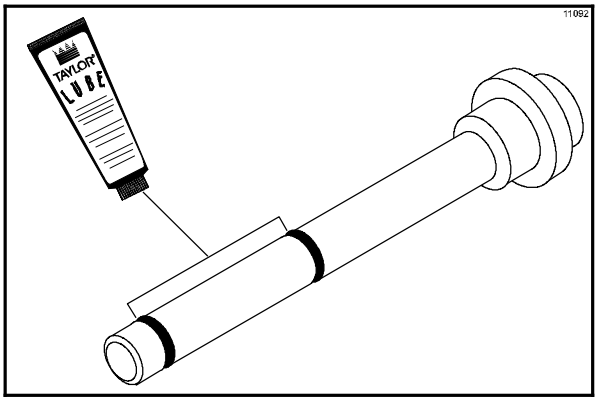

Figure 9

Note: There are two prime plugs for the Models 754, 774, 791, and 794 door, one for each freezing cylinder.

Insert the prime plug(s) into the hole(s) in the top of the freezer door, and push down.

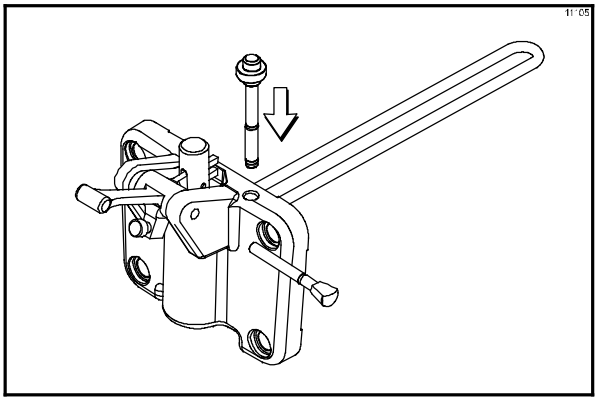

Figure 10

Step 4
Insert the baffle rod(s) through the opening in the beater(s) and seat the door flush with the freezing cylinder. With the door seated on the freezer studs, install the handscrews. Tighten equally in a crisscross pattern to insure the door is snug.

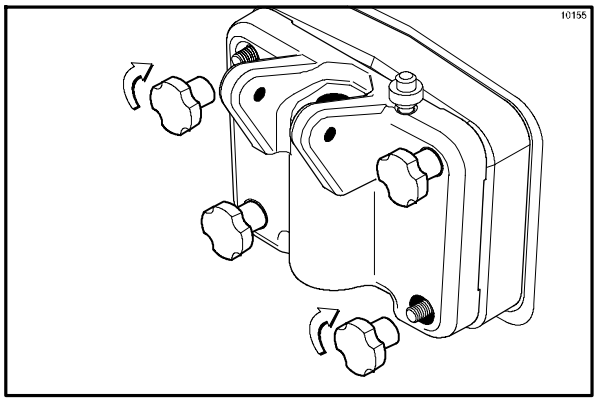

Figure 11

Note: On the Models 754, 774, 791, and 794, the short handscrews go on the bottom and the long handscrews go on the top.

Step 5
Install the draw valve(s). Slide the two o- rings into the grooves on the draw valve(s), and lubricate.

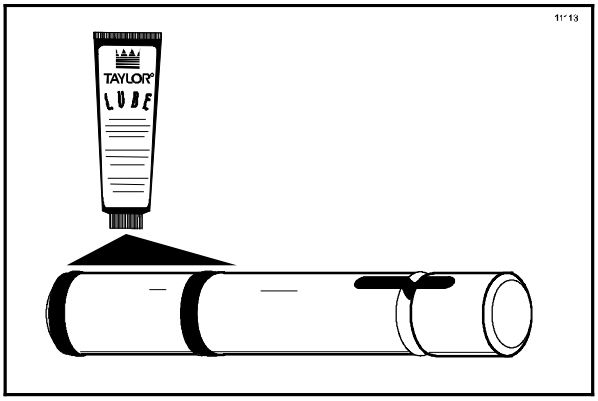

Figure 12

Note: Models 754, 774, 791, and 794 have three draw valves.

Lubricate the inside of the freezer door spout(s), top and bottom, and insert the draw valve(s) from the **bottom** until the slot in the draw valve(s) comes into view.

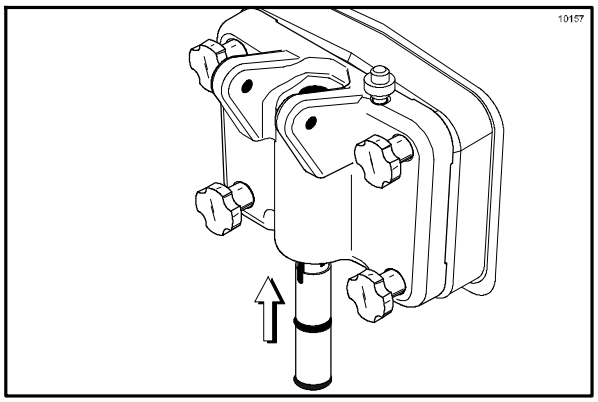

Figure 13

Step 6
Install the adjustable draw handle(s). Slide the o- ring into the groove on the pivot pin, and lubricate.

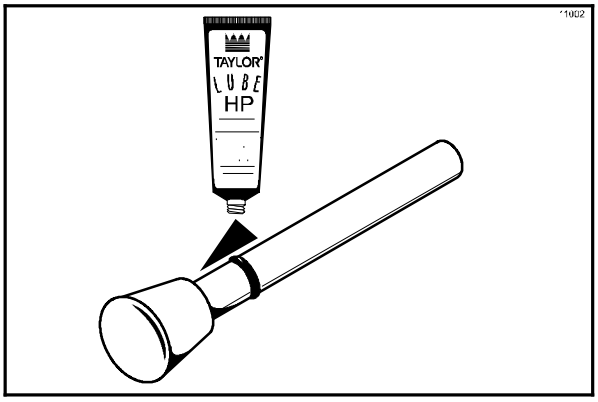

Figure 14

Slide the fork over the bar in the slot of the draw valve. Secure with pivot pin.

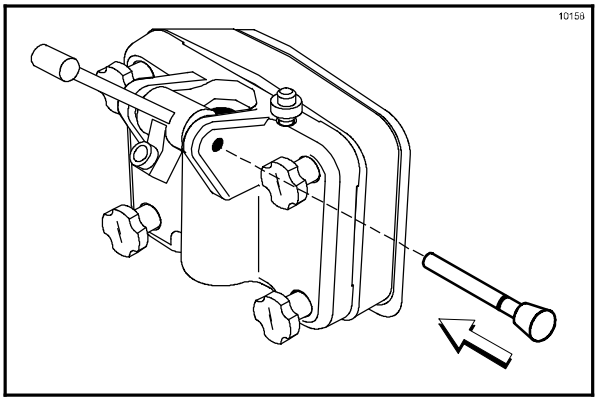

Figure 15

Note: Models 754, 774, 791, and 794 have three draw handles. Slide the fork of the draw handle in the slot of the draw valve, starting from the right. Slide the pivot pin through each draw handle as you insert them into the draw valves.

Note: These units feature adjustable draw handles to provide the best portion control. The draw handles can be adjusted for different flow rates. See page 20 for more information on adjusting these handles.

Step 7
Snap the design cap(s) over the end of the door spout(s).

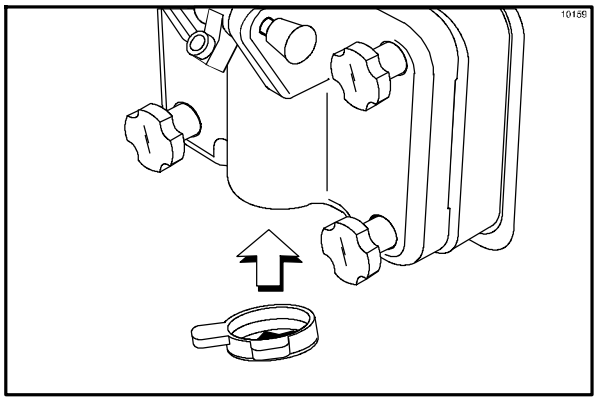

Figure 16

Step 8
Install the front drip tray and the splash shield under the door spout(s).

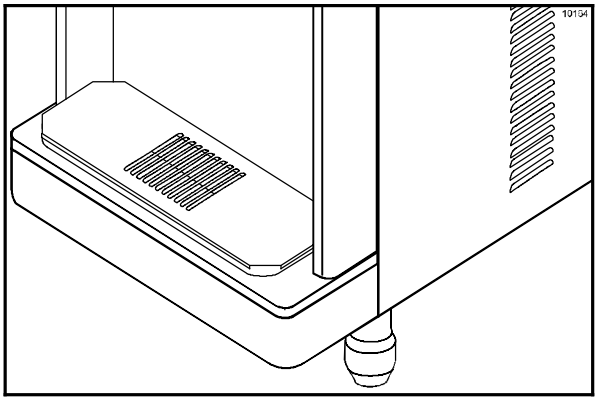

Figure 17

Step 9
Slide the rear drip pan(s) into the hole in the side panel.

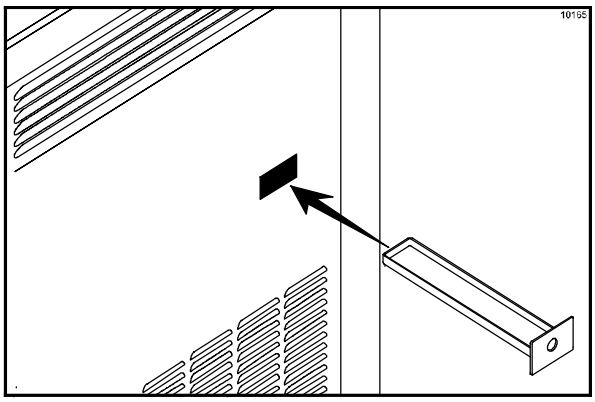

Figure 18

Models 791 & 794: Slide the rear drip pan into the hole in the front panel.

Step 10
Slide two o- rings on one end of the air tube. Slide two o- rings on the other end of the air tube.

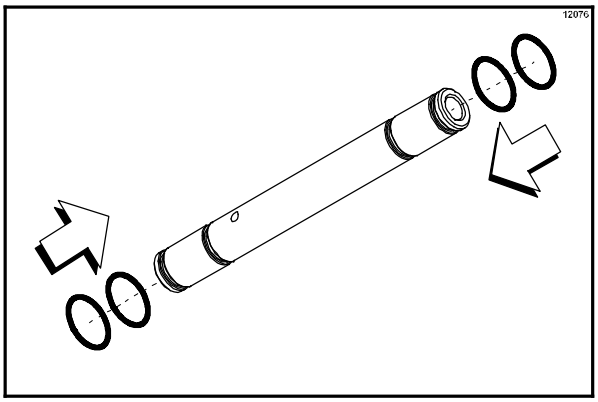

Figure 19

Slide the small o- ring into the groove of the air orifice. Do not lubricate the o- ring.

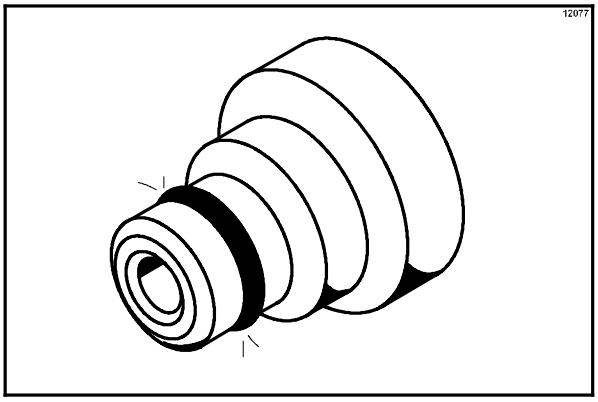

Figure 20

Note: Make sure the hole in the air orifice is clean and is not clogged. If the hole in the air orifice should become clogged, use soap and hot water to clear the hole. **Do not enlarge the hole in the air orifice.**

Install the air orifice into the hole in the top of the air tube (in the end without the small hole on the side).

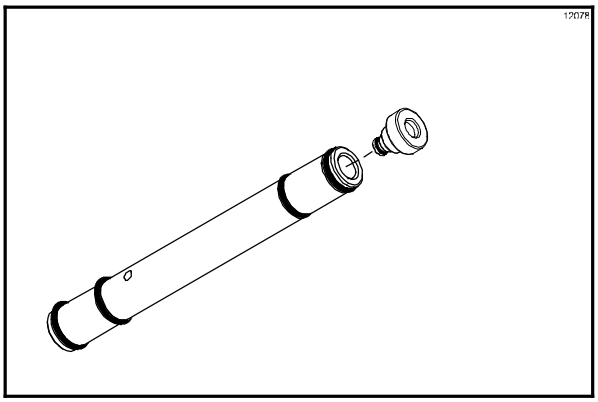

Figure 21

Step 11
Lay the air tube (with the air orifice installed) and the hopper gasket in the bottom of the mix hopper for sanitizing.

Note: The Models 754 and 774 have one hopper gasket for each mix hopper. The Models 791 and 794 do not require a hopper gasket.

Repeat steps 10 and 11 for the other side of the freezer on Models 754, 774, 791, and 794.

CAUTION: Do not run the machine without product. Failure to follow this instruction can result in damage to the machine.

Sanitizing

Step 1
Prepare an approved 100 PPM sanitizing solution (examples: 2- 1/2 gal. [9.5 liters] of Kay- 5® or 2 gal. [7.6 liters] of Stera- Sheen®). USE WARM WATER AND FOLLOW THE MANUFACTURER'S SPECIFICATIONS.

Step 2
Pour the sanitizing solution into the hopper and allow it to flow into the freezing cylinder.

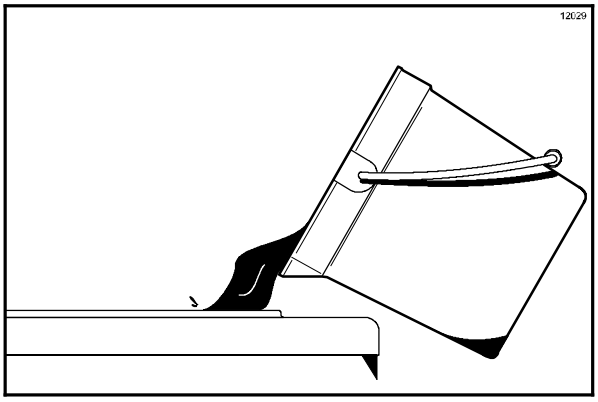

Figure 22

Step 3
While the solution is flowing into the freezing cylinder, brush clean the mix hopper. When cleaning the hopper, take particular care in brushing the mix level sensing probe on the rear wall of the hopper, the mix inlet hole, the air tube, and the hopper gasket.

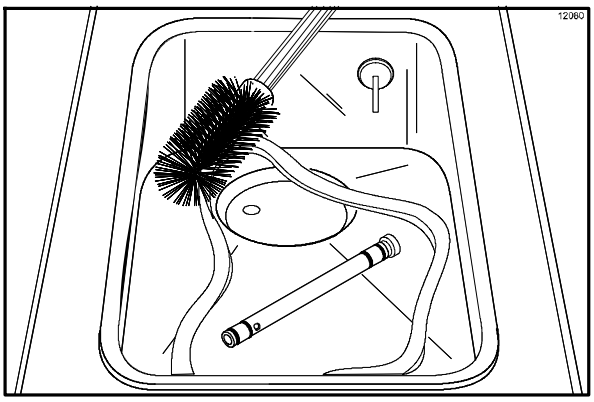

Figure 23

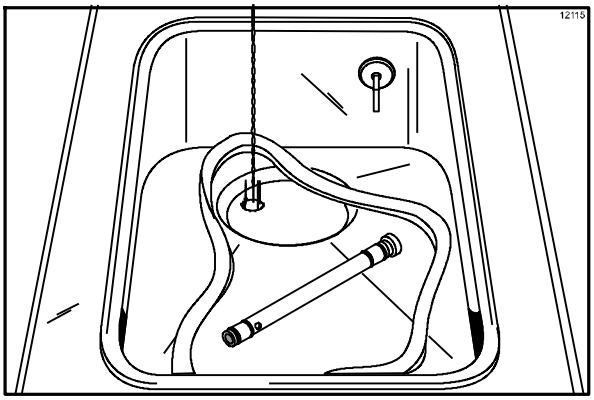

Figure 24

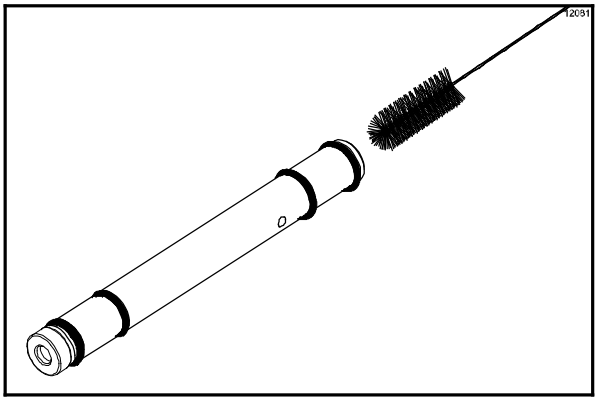

Figure 25

Step 4
Place the power switch in the ON position.

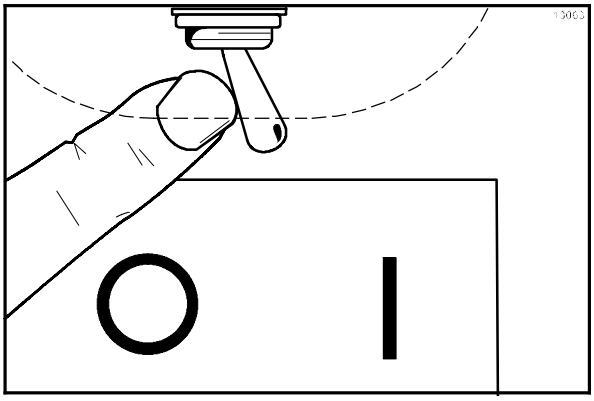

Figure 26

Step 5
Press the WASH key. This will cause the sanitizing solution in the freezing cylinder to agitate. Allow it to agitate for five minutes.

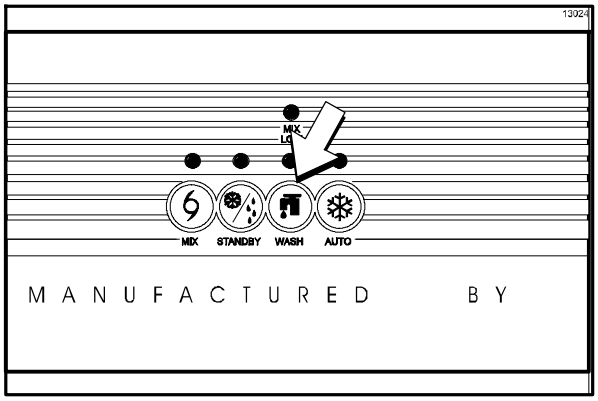

Figure 27

Step 6
Place an empty pail beneath the door spout and raise the prime plug.

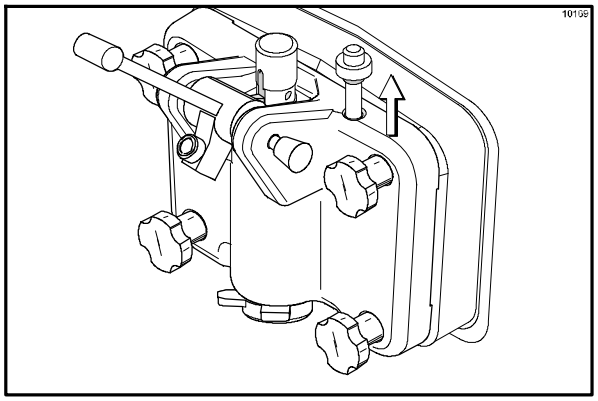

Figure 28

Step 7
When a **steady** stream of sanitizing solution is flowing from the prime plug opening in the bottom of the freezer door, lower the draw handle. Draw off all the sanitizing solution.

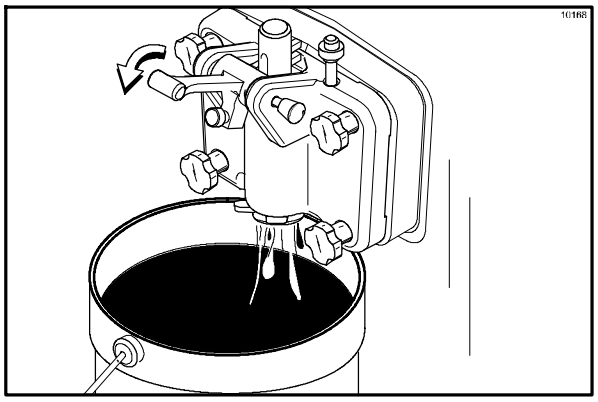

Figure 29

Note: On the Models 754, 774, 791, and 794, momentarily pull the center draw handle down to sanitize the center door spout.

Step 8
Once the sanitizer stops flowing from the door spout, raise the draw handle and press the WASH key, cancelling the beater motor operation.

Note: You have just sanitized the freezer. **Be sure your hands are sanitized** before continuing these instructions.

Step 9
Assemble the hopper gasket around the top edge of the mix hopper. Stand the air tube in the corner of the hopper.

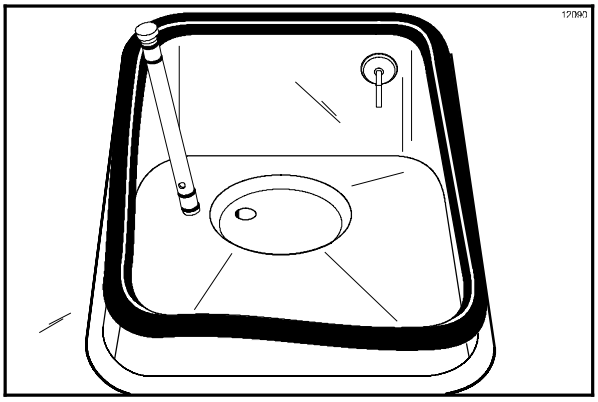

Figure 30

Repeat steps 1 through 9 for the other side of the freezer on Models 754, 774, 791, and 794.

Priming

Step 1
With a pail beneath the door spout, lower the draw handle. Be sure the prime plug is still in the UP position. Pour two gallons (7.6 liters) of fresh mix into the mix hopper and allow it to flow into the freezing cylinder. This will force out any remaining sanitizing solution. When full strength mix is flowing from the door spout, raise the draw handle.

Note: Use only **fresh** mix when priming the freezing cylinder.

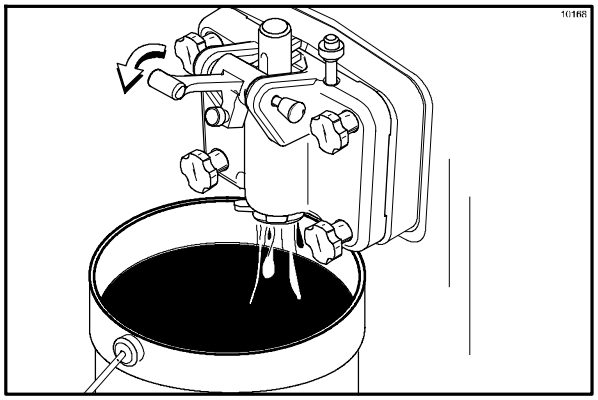

Figure 31

Step 2
Once a **steady** stream of mix starts to flow from the prime plug opening in the bottom of the freezer door, push down the prime plug.

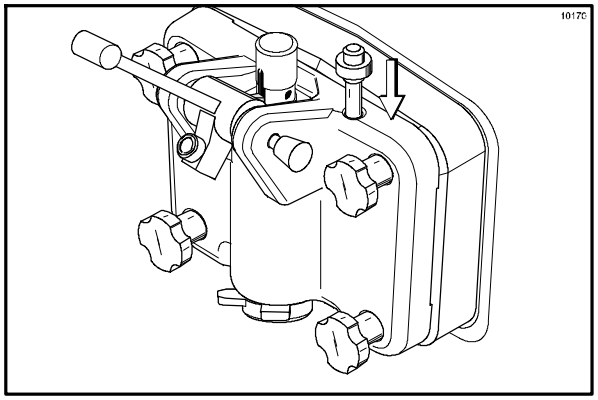

Figure 32

Step 3
Lubricate the o- rings on the air tube on the end with the small hole on the side.

Step 4
Install the air tube (the end with the hole) with the air orifice installed into the mix inlet hole in the mix hopper.

Step 5
Press the AUTO key. The AUTO light will come on indicating the main refrigeration system is operating. When the unit cycles off, the product will be at serving viscosity.

Note: On Models 751, 754, 774, 791, and 794 the MIX REF light will come on, indicating the mix refrigeration system is operating to maintain the mix in the mix hopper.

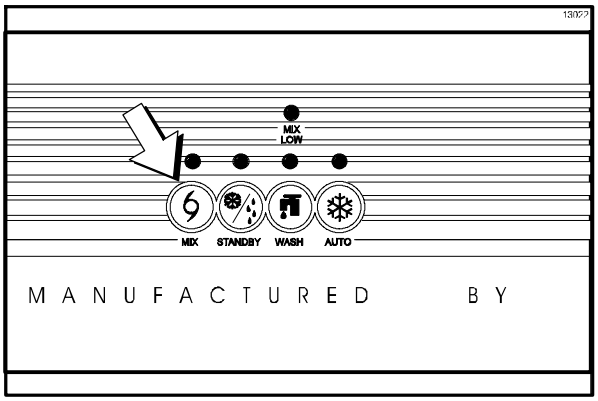

Figure 33

Step 6
Fill the hopper with mix. As the mix level comes in contact with the mix level sensing probe on the rear wall of the hopper, the MIX LOW light will shut off.

Step 7
Place the mix hopper cover in position over the mix hopper.

Repeat steps 1 through 7 for the other side of the freezer on Models 754, 774, 791, and 794.

Closing Procedure

To disassemble your unit, the following items will be needed:

- Two cleaning pails
- Sanitized stainless steel rerun can with lid
- Necessary brushes (provided with freezer)
- Cleaner
- Single service towels

Draining Product From The Freezing Cylinder

Step 1
Press the AUTO key, cancelling compressor and beater motor operation.

Press the MIX REF key, cancelling the mix hopper refrigeration system.

Step 2
Remove the hopper cover, hopper gasket and air tube. Take these parts to the sink for cleaning.

Step 3
If local health codes permit the use of rerun, place a sanitized, NSF approved stainless steel rerun container beneath the door spout. Press the WASH key and lower the draw handle. Drain the remaining product from the freezing cylinder and mix hopper. When the flow of product stops, press the WASH key and raise the draw handle. Place the sanitized lid on the rerun container and place it in the walk- in cooler.

Note: If local health codes DO NOT permit the use of rerun, the product must be discarded. Drain the product into a pail and properly discard it.

Repeat steps 1 through 3 for the other side of the freezer on Models 754, 774, 791, and 794.

ALWAYS FOLLOW LOCAL HEALTH CODES.

Rinsing

Step 1
Pour two gallons (7.6 liters) of **cool** clean water into the mix hopper. With the brushes provided, scrub the mix hopper, mix inlet hole and mix level sensing probe.

Step 2
With a pail beneath the door spout, raise the prime plug and press the WASH key.

Step 3
When a steady stream of rinse water is flowing from the prime plug opening in the bottom of the freezer door, lower the draw handle. Drain all the rinse water from the freezing cylinder, raise the draw handle and press the WASH key cancelling the WASH mode.

Repeat steps 1 through 3 for the other side of the freezer on Models 754, 774, 791, and 794.

Cleaning

Step 1
Prepare an approved 100 PPM cleaning solution (examples: 2- 1/2 gal. [9.5 liters] of Kay- 5® or 2 gal. [7.6 liters] of Stera- Sheen®). USE WARM WATER AND FOLLOW THE MANUFACTURER'S SPECIFICATIONS.

Step 2
Push down the prime plug. Pour the cleaning solution into the mix hopper.

Step 3
While the solution is flowing into the freezing cylinder, brush clean the mix hopper, mix level sensing probe, and the mix inlet hole.

Step 4
Press the WASH key. This will cause the cleaning solution in the freezing cylinder to agitate.

Step 5
Place an empty pail beneath the door spout and raise the prime plug.

Step 6
When a steady stream of cleaning solution is flowing from the prime plug opening in the bottom of the freezer door, lower the draw handle. Draw off all of the solution.

Step 7
Once the cleaner stops flowing from the door spout, raise the draw handle and press the WASH key cancelling the WASH mode.

Repeat steps 1 through 7 for the other side of the freezer on Models 754, 774, 791, and 794.

Disassembly

MAKE SURE POWER SWITCH IS IN THE "OFF" POSITION! Failure to follow this instruction may result in severe personal injury from hazardous moving parts.

Step 1
Remove the handscrews, freezer door(s), beater(s), scraper blades, and drive shaft(s) from the freezing cylinder(s). Take these parts to the sink for cleaning.

Step 2
Remove the front drip tray and the splash shield.

Brush Cleaning

Step 1
Prepare a sink with an approved cleaning solution (examples: Kay- 5® or Stera- Sheen®). USE WARM WATER AND FOLLOW THE MANUFACTURER'S SPECIFICATIONS. If another approved cleaner is used, dilute it according to the label instructions. (**IMPORTANT**: Follow the label directions. Too STRONG of a solution can cause parts damage, while too MILD of a solution will not provide adequate cleaning.) Make sure all brushes provided with the freezer are available for brush cleaning.

Step 2
Remove the seal(s) from the drive shaft(s).

Step 3
From the freezer door(s) remove:

- gasket(s)
- front bearing(s)
- pivot pin(s)
- adjustable draw handle(s)
- design cap(s)
- draw valve(s)
- prime plug(s)
- all o- rings

Note: To remove o- rings, use a single service towel to grasp the o- ring. Apply pressure in an upward direction until the o- ring pops out of its groove. With the other hand, push the top of the o- ring forward and it will roll out of the groove and can be easily removed. If there is more than one o- ring to be removed, always remove the rear o- ring first. This will allow the o- ring to slide over the forward rings without falling into the open grooves.

Step 4
Remove the o- rings from the air tube(s) and air orifice(s).

Step 5
Return to the freezer with a small amount of cleaning solution. Brush clean the rear shell bearing(s) at the back of the freezing cylinder(s) with the black bristle brush.

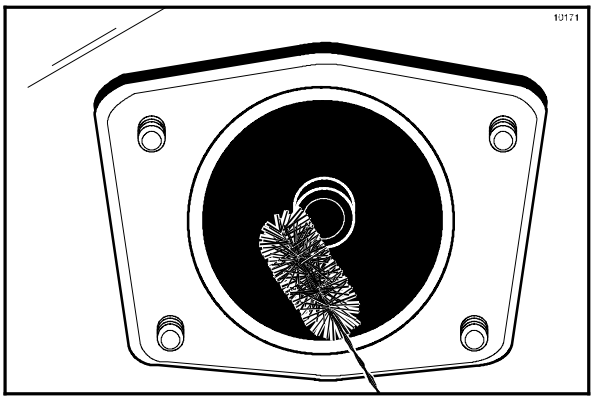

Figure 34

Step 6
Remove the rear drip pan(s) and take to the sink for cleaning.

Note: If the drip pan is filled with an excessive amount of mix, refer to the Troubleshooting Guide.

Step 7
Thoroughly brush clean all disassembled parts in the cleaning solution making sure all lubricant and mix film is removed. Take particular care to brush clean the draw valve core(s) in the freezer door. Place all the cleaned parts on a clean, dry surface to air dry overnight.

Step 8
Wipe clean all exterior surfaces of the freezer.

Section 7 Important: Operator Checklist

During Cleaning and Sanitizing

Cleaning and sanitizing schedules are governed by federal, state, or local regulatory agencies, and must be followed accordingly. If the unit has a "Standby mode", it must not be used in lieu of proper cleaning and sanitizing procedures and frequencies set forth by the ruling health authority. The following check points should be stressed during the cleaning and sanitizing operations.

CLEANING AND SANITIZING MUST BE PERFORMED DAILY.

ALWAYS FOLLOW LOCAL HEALTH CODES.

Troubleshooting Bacterial Count

☐ 1. Thoroughly clean and sanitize machine regularly, including complete disassembly and brush cleaning.

☐ 2. Use all brushes supplied for thorough cleaning. The brushes are specially designed to reach all mix passageways.

☐ 3. Use the white bristle brush to clean the mix inlet hole which extends from the mix hopper down to the rear of the freezing cylinder.

☐ 4. Use the black bristle brush to thoroughly clean the rear shell bearing located at the rear of the freezing cylinder. Be sure to have a generous amount of cleaning solution on the brush.

☐ 5. IF LOCAL HEALTH CODES PERMIT THE USE OF RERUN, make sure the mix rerun is stored in a sanitized, covered stainless steel container and used the following day. **DO NOT prime the machine with rerun.** When using rerun, skim off the foam and discard. Mix the rerun with fresh mix in a ratio of 50/50 during the days operation.

☐ 6. On a designated day of the week, run the mix as low as feasible and discard it after closing. This will break the rerun cycle and reduce the possibility of high bacteria and coliform counts.

☐ 7. Properly prepare the cleaning and sanitizing solutions. Read and follow label directions carefully. Too strong of a solution may damage the parts and too weak of a solution will not do an adequate job of cleaning or sanitizing.

☐ 8. The temperature of the mix in the mix hopper and walk- in cooler should be below 40°F. (4.4°C.).

Regular Maintenance Checks

☐ 1. Replace scraper blades that are nicked or damaged. Before installing the beater assembly, be certain that scraper blades are properly attached to the helix.

☐ 2. Check the rear shell bearing for signs of wear (excessive mix leakage in rear drip pan) and be certain it is properly cleaned.

☐ 3. Using a screwdriver and cloth towel, keep the rear shell bearing and the 3/4 hex drive coupling clean and free of lubricant and mix deposits.

☐ 4. Dispose of o- rings and seals if they are worn, torn, or fit too loosely, and replace with new ones.

☐ 5. Follow all lubricating procedures as outlined in "Assembly".

☐ 6. If your machine is air cooled, check the condensers for accumulation of dirt and lint. Dirty condensers will reduce the efficiency and capacity of the machine. Condensers should be cleaned monthly with a soft brush. **Never use screwdrivers or other metal probes to clean between the fins.**
Note: For machines equipped with an air filter, it will be necessary to vacuum clean the filters on a monthly schedule.

Caution: Always disconnect electrical power prior to cleaning the condenser. Failure to follow this instruction may result in electrocution.

☐ 7. If your machine is equipped with an auxiliary refrigeration system, check the auxiliary condenser for accumulation of dirt and lint. Dirty condensers will reduce the refrigeration capacity of the mix hopper. Condensers must be cleaned monthly with a soft brush. Never **use screwdrivers or other metal probes to clean between the fins.** Failure to follow this instruction may result in electrocution.

Caution: Always disconnect electrical power prior to cleaning the condenser. Failure to follow this instruction may result in electrocution.

☐ 8. If your machine is water cooled, check the water lines for kinks or leaks. Kinks can occur when the machine is moved back and forth for cleaning or maintenance purposes. Deteriorated or cracked water lines should be replaced only by an authorized Taylor distributor.

Winter Storage

If the place of business is to be closed during the winter months, it is important to protect the freezer by following certain precautions, particularly if the building is subject to freezing conditions.

Disconnect the freezer from the main power source to prevent possible electrical damage.

On water cooled freezers, disconnect the water supply. Relieve pressure on the spring in the water valve. Use air pressure on the outlet side to blow out any water remaining in the condenser. **This is extremely important.** Failure to follow this procedure may cause severe and costly damage to the refrigeration system.

Your local Taylor Distributor can perform this winter storage service for you.

Wrap detachable parts of the freezer such as beater, blades, drive shaft, and freezer door, and place them in a protected dry place. Rubber trim parts and gaskets can be protected by wrapping them with moisture- proof paper. All parts should be thoroughly cleaned of dried mix or lubrication which attract mice and other vermin.

Section 8 Troubleshooting Guide

PROBLEM	PROBABLE CAUSE	REMEDY	PAGE REF.
1. No product is being dispensed with draw valve open and the machine in the AUTO mode.	a. Freeze- up in mix inlet hole.	a. Call service technician to adjust the mix hopper temperature.	- - -
	b. Beater motor out on reset.	b. Reset the freezer.	20
	c. The beater is rotating counterclockwise from the operator end.	c. Contact service technician to correct rotation to clockwise from operator end.	- - -
	d. The circuit breaker is off or the fuse is blown.	d. Turn the breaker on, or replace the fuse.	- - -
	e. There is inadequate mix in the mix hopper.	e. Fill the mix hopper with mix.	28
	f. The air orifice is not installed.	f. Install air orifice in air tube.	28
2. The product is too stiff.	a. The viscosity needs adjustment.	a. Contact service technician.	- - -
	b. The air orifice is not installed.	b. Install air orifice in air tube.	28
3. The product is too soft.	a. Viscosity needs adjustment.	a. Contact service technician.	- - -
	b. Not enough air space around unit. (Air cooled units)	b. Allow for adequate air flow across the condenser.	6
	c. Worn scraper blades.	c. Replace regularly.	36
	d. Dirty condenser (A/C)	d. Clean monthly.	32
	e. Mix is out of date.	e. Use only fresh mix.	- - -
	f. Loss of water. (W/C)	f. Locate cause of water loss and correct.	32
4. The mix in the mix hopper is too cold.	a. The temperature is out of adjustment.	a. Call service technician to adjust the mix hopper temperature.	- - -

PROBLEM	PROBABLE CAUSE	REMEDY	PAGE REF.
5. The mix in the mix hopper is too warm.	a. The temperature is out of adjustment.	a. Call service technician to adjust the mix hopper temperature.	- - -
	b. Missing or defective mix hopper gasket.	b. Replace/install the gasket around the mix hopper.	28
	c. The mix hopper cover is not in position.	c. Place the cover in position.	29
	d. The MIX REF light is not lit.	d. Press the MIX REF key.	19
6. The drive shaft is stuck in the drive coupling.	a. Rounded corners of drive shaft, coupling, or both.	a. Call service technician to correct cause, and to replace the necessary components. Do not lubricate the hex end of the drive shaft.	- - -
	b. Mix and lubricant collected in the drive coupling.	b. Brush clean the rear shell bearing area regularly.	30
7. The freezing cylinder walls are scored.	a. The beater assembly is bent.	a. Call service technician to repair or replace the beater and to correct the cause of insufficient mix in the freezing cylinder.	- - -
	b. The front bearing is missing or worn on the freezer door.	b. Install or replace the front bearing.	22
8. Excessive mix leakage into the rear drip pan.	a. Missing or worn drive shaft seal on drive shaft.	a. Install or replace regularly.	21 / 36
	b. The rear shell bearing is worn.	b. Call service technician to replace rear shell bearing.	- - -
9. Excessive mix leakage from door spout.	a. Missing or worn draw valve o- rings.	a. Install or replace regularly.	24 / 36
	b. Inadequate lubrication of draw valve o- rings.	b. Lubricate properly.	24
	c. Wrong type of lubricant is being used (example: petroleum base lubricant).	c. Use the proper lubricant (example: Taylor Lube).	21
10. No freezer operation after pressing the AUTO key.	a. Unit is unplugged.	a. Plug into wall receptacle.	- - -
	b. The circuit breaker is off or the fuse is blown.	b. Turn the breaker on, or replace the fuse.	- - -
	c. The beater motor is out on reset.	c. Reset the freezer.	20

PROBLEM	PROBABLE CAUSE	REMEDY	PAGE REF.
11. Product is not feeding into the freezing cylinder.	a. Inadequate level of mix in the mix hopper.	a. Fill the mix hopper with mix.	28
	b. The mix inlet hole is frozen up.	b. The mix hopper temperature needs adjustment. Call service technician.	- - -
	c. The air tube is installed incorrectly.	c. Install the air tube in the mix inlet hole, using the end with the small hole in the side.	28
	d. The air orifice is not installed.	d. Install the air orifice in the air tube.	28

Section 9 Parts Replacement Schedule

PART DESCRIPTION	EVERY 3 MONTHS	EVERY 6 MONTHS	ANNUALLY
Drive Shaft Seal	X		
Scraper Blade	X		
Freezer Door Gasket	X		
Front Bearing	X		
Draw Valve O- Ring	X		
Pivot Pin O- Ring	X		
Prime Plug O- Ring	X		
Air Tube O- Ring	X		
Air Orifice O- Ring	X		
White Bristle Brush, 3” x 7”		Inspect & Replace if Necessary	Minimum
White Bristle Brush, 1” x 2”		Inspect & Replace if Necessary	Minimum
Black Bristle Brush, 1” x 2”		Inspect & Replace if Necessary	Minimum
Double- Ended Brush		Inspect & Replace if Necessary	Minimum

Section 10 Limited Warranty on Equipment

TAYLOR COMPANY LIMITED WARRANTY ON FREEZERS

Taylor Company, a division of Carrier Commercial Refrigeration, Inc. ("Taylor") is pleased to provide this limited warranty on new Taylor-branded freezer equipment available from Taylor to the market generally (the "Product") to the original purchaser only.

LIMITED WARRANTY

Taylor warrants the Product against failure due to defect in materials or workmanship under normal use and service as follows. All warranty periods begin on the date of original Product installation. If a part fails due to defect during the applicable warranty period, Taylor, through an authorized Taylor distributor or service agency, will provide a new or re- manufactured part, at Taylor's option, to replace the failed defective part at no charge for the part. Except as otherwise stated herein, these are Taylor's exclusive obligations under this limited warranty for a Product failure. This limited warranty is subject to all provisions, conditions, limitations and exclusions listed below and on the reverse (if any) of this document.

Product	Part	Limited Warranty Period
Soft Serve	Insulated shell assembly	Five (5) years
Frozen Yogurt **Shakes**	Refrigeration compressor (except service valve)	Five (5) years
Smoothies	Beater motors	Two (2) years
Frozen Beverage	Beater drive gear	Two (2) years
Batch Desserts	Printed circuit boards and Softech controls beginning with serial number H8024200	Two (2) years
	Parts not otherwise listed in this table or excluded below	One (1) year

LIMITED WARRANTY CONDITIONS

1. If the date of original installation of the Product cannot be verified, then the limited warranty period begins ninety (90) days from the date of Product manufacture (as indicated by the Product serial number). Proof of purchase may be required at time of service.
2. This limited warranty is valid only if the Product is installed and all required service work on the Product is performed by an authorized Taylor distributor or service agency, and only if genuine, new Taylor parts are used.
3. Installation, use, care, and maintenance must be normal and in accordance with all instructions contained in the Taylor Operator's Manual.
4. Defective parts must be returned to the authorized Taylor distributor or service agency for credit.
5. The use of any refrigerant other than that specified on the Product's data label will void this limited warranty.

LIMITED WARRANTY EXCEPTIONS

This limited warranty does **not** cover:

1. Labor or other costs incurred for diagnosing, repairing, removing, installing, shipping, servicing or handling of defective parts, replacement parts, or new Products.
2. Normal maintenance, cleaning and lubrication as outlined in the Taylor Operator's Manual, including cleaning of condensers.

131206

3. Replacement of wear items designated as Class “000” parts in the Taylor Operator’s Manual.
4. External hoses, electrical power supplies, and machine grounding.
5. Parts not supplied or designated by Taylor, or damages resulting from their use.
6. Return trips or waiting time required because a service technician is prevented from beginning warranty service work promptly upon arrival.
7. Failure, damage or repairs due to faulty installation, misapplication, abuse, no or improper servicing, unauthorized alteration or improper operation or use as indicated in the Taylor Operator’s Manual, including but not limited to the failure to use proper assembly and cleaning techniques, tools, or approved cleaning supplies.
8. Failure, damage or repairs due to theft, vandalism, wind, rain, flood, high water, water, lightning, earthquake or any other natural disaster, fire, corrosive environments, insect or rodent infestation, or other casualty, accident or condition beyond the reasonable control of Taylor; operation above or below the electrical or water supply specification of the Product; or components repaired or altered in any way so as, in the judgment of the Manufacturer, to adversely affect performance, or normal wear or deterioration.
9. Any Product purchased over the Internet.
10. Failure to start due to voltage conditions, blown fuses, open circuit breakers, or damages due to the inadequacy or interruption of electrical service.
11. Electricity or fuel costs, or increases in electricity or fuel costs from any reason whatsoever.
12. Damages resulting from the use of any refrigerant other than that specified on the Product’s data label will void this limited warranty.
13. Any cost to replace, refill or dispose of refrigerant, including the cost of refrigerant.
14. **ANY SPECIAL, INDIRECT OR CONSEQUENTIAL PROPERTY OR COMMERCIAL DAMAGE OF ANY NATURE WHATSOEVER.** Some jurisdictions do not allow the exclusion of incidental or consequential damages, so this limitation may not apply to you.

This limited warranty gives you specific legal rights, and you may also have other rights which vary from jurisdiction to jurisdiction.

LIMITATION OF WARRANTY

THIS LIMITED WARRANTY IS EXCLUSIVE AND IS IN LIEU OF ALL OTHER WARRANTIES, CONDITIONS AND/OR REMEDIES UNDER THE LAW, INCLUDING ANY IMPLIED WARRANTIES OR CONDITIONS OF MERCHANTABILITY OR FITNESS FOR A PARTICULAR PURPOSE. THE ORIGINAL OWNER’S SOLE REMEDY WITH RESPECT TO ANY PRODUCTS SHALL BE REPAIR OR REPLACEMENT OF DEFECTIVE COMPONENTS UNDER THE TERMS OF THIS LIMITED WARRANTY. ALL RIGHTS TO CONSEQUENTIAL OR INCIDENTAL DAMAGES (INCLUDING CLAIMS FOR LOST SALES, LOST PROFITS, PRODUCT LOSS, PROPERTY DAMAGES OR SERVICE EXPENSES) ARE EXPRESSLY EXCLUDED. THE EXPRESS WARRANTIES MADE IN THIS LIMITED WARRANTY MAY NOT BE ALTERED, ENLARGED, OR CHANGED BY ANY DISTRIBUTOR, DEALER, OR OTHER PERSON, WHATSOEVER.

LEGAL REMEDIES

The owner **must** notify Taylor in writing, by certified or registered letter to the following address, of any defect or complaint with the Product, stating the defect or complaint and a specific request for repair, replacement, or other correction of the Product under warranty, mailed at least thirty (30) days before pursuing any legal rights or remedies.

Taylor Company
a division of Carrier Commercial Refrigeration, Inc.
750 N. Blackhawk Blvd.
Rockton, IL 61072, U.S.A.

Section 11 Limited Warranty on Parts

TAYLOR COMPANY LIMITED WARRANTY ON TAYLOR GENUINE PARTS

Taylor Company, a division of Carrier Commercial Refrigeration, Inc. ("Taylor") is pleased to provide this limited warranty on new Taylor genuine replacement components and parts available from Taylor to the market generally (the "Parts") to the original purchaser only.

LIMITED WARRANTY

Taylor warrants the Parts against failure due to defect in materials or workmanship under normal use and service as follows. All warranty periods begin on the date of original installation of the Part in the Taylor unit. If a Part fails due to defect during the applicable warranty period, Taylor, through an authorized Taylor distributor or service agency, will provide a new or re- manufactured Part, at Taylor's option, to replace the failed defective Part at no charge for the Part. Except as otherwise stated herein, these are Taylor's exclusive obligations under this limited warranty for a Part failure. This limited warranty is subject to all provisions, conditions, limitations and exclusions listed below and on the reverse (if any) of this document.

Part's Warranty Class Code or Part	Limited Warranty Period
Class 103 Parts[1]	Three (3) months
Class 212 Parts[2]	Twelve (12) months
Class 512 Parts	Twelve (12) months
Class 000 Parts	No warranty
Taylor Part #072454 (Motor- 24VDC *C832/C842*)	Four (4) years

LIMITED WARRANTY CONDITIONS

1. If the date of original installation of the Part cannot be otherwise verified, proof of purchase may be required at time of service.
2. This limited warranty is valid only if the Part is installed and all required service work in connection with the Part is performed by an authorized Taylor distributor or service agency.
3. The limited warranty applies only to Parts remaining in use by their original owner at their original installation location in the unit of original installation.
4. Installation, use, care, and maintenance must be normal and in accordance with all instructions contained in the Taylor Operator's Manual.
5. Defective Parts must be returned to the authorized Taylor distributor or service agency for credit.
6. This warranty is not intended to shorten the length of any warranty coverage provided pursuant to a separate Taylor Limited Warranty on freezer or grill equipment.
7. The use of any refrigerant other than that specified for the unit in which the Part is installed will void this limited warranty.

[1, 2] Except that Taylor Part #032129SER2 (Compressor-Air-230V SERV) and Taylor Part #075506SER1 (Compressor-Air-115V 60HZ) shall have a limited warranty period of twelve (12) months when used in Taylor freezer equipment and a limited warranty period of two (2) years when used in Taylor grill equipment.

131206

LIMITED WARRANTY EXCEPTIONS

This limited warranty does **not** cover:

1. Labor or other costs incurred for diagnosing, repairing, removing, installing, shipping, servicing or handling of defective Parts, replacement Parts, or new Parts.
2. Normal maintenance, cleaning and lubrication as outlined in the Taylor Operator's Manual, including cleaning of condensers or carbon and grease buildup.
3. Required service, whether cleaning or general repairs, to return the cooking surface assemblies, including the upper platen and lower plate, to an operational condition to achieve proper cooking or allow proper assembly of release sheets and clips as a result of grease build-up on the cooking surfaces, including but not limited to the platen and plate, sides of the shroud or top of the shroud.
4. Replacement of cooking surfaces, including the upper platen and lower plate, due to pitting or corrosion (or in the case of the upper platen, due to loss of plating) as a result of damage due to the impact of spatulas or other small wares used during the cooking process or as a result of the use of cleaners, cleaning materials or cleaning processes not approved for use by Taylor.
5. Replacement of wear items designated as Class "000" Parts in the Taylor Operator's Manual, as well as any release sheets and clips for the Product's upper platen assembly.
6. External hoses, electrical power supplies, and machine grounding.
7. Parts not supplied or designated by Taylor, or damages resulting from their use.
8. Return trips or waiting time required because a service technician is prevented from beginning warranty service work promptly upon arrival.
9. Failure, damage or repairs due to faulty installation, misapplication, abuse, no or improper servicing, unauthorized alteration or improper operation or use as indicated in the Taylor Operator's Manual, including but not limited to the failure to use proper assembly and cleaning techniques, tools, or approved cleaning supplies.
10. Failure, damage or repairs due to theft, vandalism, wind, rain, flood, high water, water, lightning, earthquake or any other natural disaster, fire, corrosive environments, insect or rodent infestation, or other casualty, accident or condition beyond the reasonable control of Taylor; operation above or below the gas, electrical or water supply specification of the unit in which a part is installed; or Parts or the units in which they are installed repaired or altered in any way so as, in the judgment of Taylor, to adversely affect performance, or normal wear or deterioration.
11. Any Part purchased over the Internet.
12. Failure to start due to voltage conditions, blown fuses, open circuit breakers, or damages due to the inadequacy or interruption of electrical service.
13. Electricity, gas or other fuel costs, or increases in electricity or fuel costs from any reason whatsoever.
14. Damages resulting from the use of any refrigerant other than that specified for the unit in which the Part is installed will void this limited warranty.
15. Any cost to replace, refill or dispose of refrigerant, including the cost of refrigerant.
16. **ANY SPECIAL, INDIRECT OR CONSEQUENTIAL PROPERTY OR COMMERCIAL DAMAGE OF ANY NATURE WHATSOEVER.** Some jurisdictions do not allow the exclusion of incidental or consequential damages, so this limitation may not apply to you.

This limited warranty gives you specific legal rights, and you may also have other rights which vary from jurisdiction to jurisdiction.

LIMITATION OF WARRANTY

THIS LIMITED WARRANTY IS EXCLUSIVE AND IS IN LIEU OF ALL OTHER WARRANTIES, CONDITIONS AND/OR REMEDIES UNDER THE LAW, INCLUDING ANY IMPLIED WARRANTIES OR CONDITIONS OF MERCHANTABILITY OR FITNESS FOR A PARTICULAR PURPOSE. THE ORIGINAL OWNER'S SOLE REMEDY WITH RESPECT TO ANY PRODUCTS SHALL BE REPAIR OR REPLACEMENT OF DEFECTIVE PARTS UNDER THE TERMS OF THIS LIMITED WARRANTY. ALL RIGHTS TO CONSEQUENTIAL OR INCIDENTAL DAMAGES (INCLUDING CLAIMS FOR LOST SALES, LOST PROFITS, PRODUCT LOSS, PROPERTY DAMAGES OR SERVICE EXPENSES) ARE EXPRESSLY EXCLUDED. THE EXPRESS WARRANTIES MADE IN THIS LIMITED WARRANTY MAY NOT BE ALTERED, ENLARGED, OR CHANGED BY ANY DISTRIBUTOR, DEALER, OR OTHER PERSON, WHATSOEVER.

LEGAL REMEDIES

The owner **must** notify Taylor in writing, by certified or registered letter to the following address, of any defect or complaint with the Part, stating the defect or complaint and a specific request for repair, replacement, or other correction of the Part under warranty, mailed at least thirty (30) days before pursuing any legal rights or remedies.

Taylor Company
a division of Carrier Commercial Refrigeration, Inc.
750 N. Blackhawk Blvd.
Rockton, IL 61072, U.S.A.