TAYLOR®

Item No. _____

C706

CROWN® SERIES

TOTALLY DIFFERENT.

C706

Soft Serve Freezer

Single Flavor, Pump

Features

Offer all the popular soft serve variations from low or non-fat ice creams to custards, yogurt and sorbet.

Freezing Cylinder

One, 3.4 quart (3.2 liter).

Mix Hopper

One, 20 quart (18.9 liter). Simplified air/mix pump delivers the precise amount of mix and air to the freezing cylinder for consistent overrun. Separate hopper refrigeration (SHR) maintains mix below 41ºF (5ºC) during Auto and Standby modes.

Indicator Lights

Mix Low light alerts operator to add mix. When the Mix Out light flashes, the unit shuts down automatically to prevent damage.

Electronic Controls

Softech™ is our exclusive microprocessor based master control that regulates refrigeration by measuring product viscosity to maintain consistent quality.

Standby

During long no-use periods, the standby feature maintains safe product temperatures in the mix hopper and freezing cylinder.

Digital Temperature Indicator

Hopper temperature is displayed to assure safe product temperatures. Indicator may be switched from Fahrenheit to Celsius temperature display.

Door Interlock System

Protects the operator from injury as the beater will not operate without the dispensing door in place.

Optional Cart with front opening door

Optional Cart with rear door for front mount syrup rail

Optional Top Air Discharge Chute

NSF — Standard 6

c UL us LISTED — SA2650

CE — Selected 50 Hz. Models

Continuing research results in steady improvements; therefore, these specifications are subject to change without notice.

Rockton, Illinois 61072
800-255-0626
Phone 815-624-8333 Fax 815-624-8000
www.taylor-company.com
e-mail: info@taylor-company.com

International Office
Taylor Company S.r.l.
Roma, Italy
Tel: **+39-06-420-12002** Fax: +39-06-420-12034
e-mail: romeoff@taylor-company.com

ISO 9001:2008 Registered Firm

C706 Soft Serve Freezer

Shown with optional Air Discharge Chute and Cart

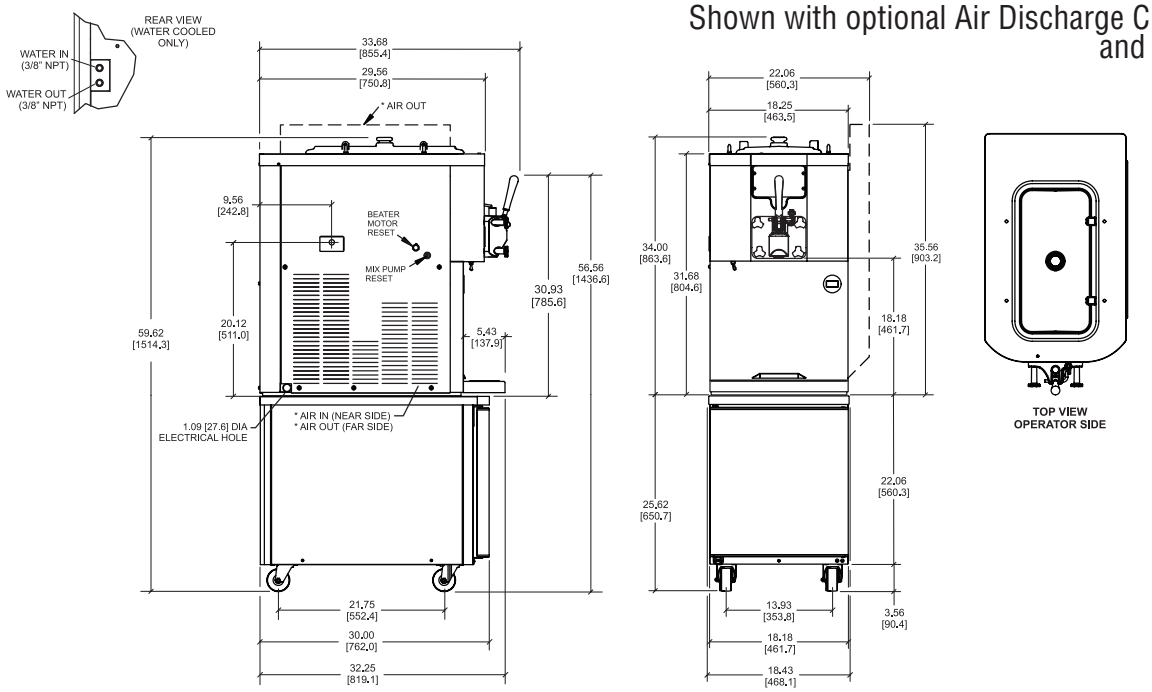

NOTE: * (AIR COOLED ONLY) FIGURES IN BRACKETS INDICATE MILLIMETERS / DECIMAL AND FRACTIONAL DIMENSIONS EQUAL TO (PLUS OR MINUS 1/16 INCH [1.5mm]).

Weights	lbs.	kgs.
Net	430	195.1
Crated	437	198.2
	cu. ft.	**cu. m.**
Volume	35.8	1.02

Dimensions	in.	mm.
Width	18-1/4	464
Depth	32-1/4	820
Height	34	864
Counter Clearance	---	---

**Designed to rest on a plastic pad directly on the counter top or optional cart.*

Electrical	Maximum Fuse Size	Minimum Circuit Ampacity	Poles (P) Wires (W)
208-230/60/1 Air	35	26	2P 3W
208-230/60/1 Water	35	26	2P 3W
208-230/60/3 Air	25	18	3P 4W
208-230/60/3 Water	25	18	3P 4W
220-240/50/1 Air	30	22	2P 3W
380-415/50/3N~ Air	12	9	4P 5W

This unit may be manufactured in other electrical characteristics. Refer to the local Taylor Distributor for availability.

(For exact electrical information, always refer to the data label of the unit.)

Bidding Specs

Electrical: Volt _____ Hz _____ ph _____

Neutral: ☐Yes ☐No | **Cooling**: ☐Air ☐Water ☐NA

Options: _____

Specifications

Electrical

One dedicated electrical connection is required. See the Electrical chart for the proper electrical requirements. Manufactured to be permanently connected. Consult your local Taylor distributor for cord & receptacle specifications as local codes allow.

Beater Motor

One, 1.5 HP.

Refrigeration System

One, 9,500 BTU/hr. R404A. Separate Hopper Refrigeration (SHR), One, 400 BTU/hr. R134a. (BTUs may vary depending on compressor used.)

Air Cooled

Minimum 6" (152 mm) on both sides and place the back of the unit against a wall to prevent recirculation of warm air. Minimum air clearances must be met to assure adequate air flow for optimum performance.

Optional air discharge chute directs heated air exhaust upwards. No clearance required on right side if air discharge chute is used.

Water Cooled

Water inlet and drain connections out rear panel 3/8" FPT.

Options

- Cart with casters-height to top of hopper cover: 59-5/8" (1515 mm)
- Cone Dispenser
- Decals - Vanilla or Flavor Burst Cone
- Hopper Locks
- Legs - [increase height of unit by 4-1/4" (108 mm)]
- Syrup Rail (front mount requires special cart with rear door)Syrup Rail Kit (side mount)
- Top Air Discharge Chute (air cooled only)

C201 Cart Weights:

Net: 150 lbs. (68.0 kg) Crated: 171 lbs. (77.6 kg) 14.5 cu. ft. (0.41 cu. m.)

TAYLOR®

Taylor Company,
Rockton, Illinois 61072
815-624-8333 **800-255-0626** Fax 815-624-8000
www.taylor-company.com

© 2012 Taylor Company, a division of Carrier Commercial Refrigeration, Inc.