OPERATOR'S MANUAL

TAYLOR

United Technologies

Model C706
Soft Serve Freezer

Original Operating Instructions

056436-M

February, 2003 (Original Publication)
(Updated 6/19/15)

Complete this page for quick reference when service is required:

Taylor Distributor: _____

Address: _____

Phone: _____

Service: _____

Parts: _____

Date of Installation: _____

Information found on the data label:

Model Number: _____

Serial Number: _____

Electrical Specs: Voltage _____ Cycle _____

Phase _____

Maximum Fuse Size: _____ A

Minimum Wire Ampacity: _____ A

© 2003 Carrier Commercial Refrigeration, Inc.
056436- M
Any unauthorized reproduction, disclosure, or distribution of copies by any person of any portion of this work may be a violation of Copyright Law of the United States of America and other countries, could result in the awarding of Statutory Damages of up to $250,000 (17 USC 504) for infringement, and may result in further civil and criminal penalties.
All rights reserved.

TAYLOR
United Technologies

Taylor Company
a division of Carrier Commercial Refrigeration, Inc.
750 N. Blackhawk Blvd.
Rockton, IL 61072

Table of Contents

Section 1 To the Installer 1

Section 2 To the Operator 4

Section 3 Safety 5

Section 4 Operator Parts Identification 7

Model C706 Single Spout Door and Beater Assembly 8

X57029- XX Pump A. - Mix Simplified 9

Accessories 10

Section 5 Important: To the Operator 11

Symbol Definitions 12

Power Switch 12

Indicator Lights 12

MIX REF Key 12

STANDBY Key 12

WASH Key 13

AUTO Key 13

Pump Key 13

Beater Motor Reset Button 13

Air/Mix Pump Reset Button 13

Adjustable Draw Handle 13

Feed Tube (Back- up Option) 14

Section 6 Operating Procedures 15

Prior to Set- Up (Freezers With Topping Pumps Only) 15

Assembly 15

Mix Hopper Assembly 18

Sanitizing 21

Priming 23

Closing Procedure 24

Draining Product From the Freezing Cylinder 25

Rinsing 25

Cleaning 25

Disassembly 26
Brush Cleaning 26

Section 7 Important: Operator Checklist 28

During Cleaning and Sanitizing 28
Troubleshooting Bacterial Count 28
Regular Maintenance Checks 28
The Air/Mix Pump Checklist 29
Winter Storage 29

Section 8 Troubleshooting Guide 30

Section 9 Parts Replacement Schedule 34

Section 10 Limited Warranty on Equipment 35

Section 11 Limited Warranty on Parts 37

Note: Continuing research results in steady improvements; therefore, information in this manual is subject to change without notice.

Note: Only instructions originating from the factory or its authorized translation representative(s) are considered to be the original set of instructions.

© 2003 Carrier Commercial Refrigeration, Inc. (Original Publication)
(Updated June, 2015)
056436- M
Any unauthorized reproduction, disclosure, or distribution of copies by any person of any portion of this work may be a violation of Copyright Law of the United States of America and other countries, could result in the awarding of Statutory Damages of up to $250,000 (17 USC 504) for infringement, and may result in further civil and criminal penalties.
All rights reserved.

Taylor Company
a division of Carrier Commercial Refrigeration, Inc.
750 N. Blackhawk Blvd.
Rockton, IL 61072

Section 1 To the Installer

The following information has been included in the manual as safety and regulatory guidelines. For complete installation instructions, please see the Installation Checklist.

Installer Safety

In all areas of the world, equipment should be installed in accordance with existing local codes. Please contact your local authorities if you have any questions.

Care should be taken to ensure that all basic safety practices are followed during the installation and servicing activities related to the installation and service of Taylor equipment.

- Only authorized Taylor service personnel should perform installation and repairs on the equipment.
- Authorized service personnel should consult OSHA Standard 29CFRI910.147 or the applicable code of the local area for the industry standards on lockout/tagout procedures before beginning any installation or repairs.
- Authorized service personnel must ensure that the proper PPE is available and worn when required during installation and service.
- Authorized service personnel must remove all metal jewelry, rings, and watches before working on electrical equipment.

The main power supply(s) to the freezer must be disconnected prior to performing any repairs. Failure to follow this instruction may result in personal injury or death from electrical shock or hazardous moving parts as well as poor performance or damage to the equipment.

Note: All repairs must be performed by an authorized Taylor Service Technician.

This unit has many sharp edges that can cause severe injuries.

Site Preparation

Review the area where the unit will be installed before uncrating the unit. Make sure that all possible hazards to the user and the equipment have been addressed.

Air Cooled Units

DO NOT obstruct air intake and discharge openings:

The model C706 air cooled unit requires a minimum of 6” (152 mm) of clearance on both sides and 0” in the rear of the unit. This will allow for adequate air flow across the condenser(s). Failure to allow adequate clearance can reduce the refrigeration capacity of the freezer and possibly cause permanent damage to the compressor.

For Indoor Use Only: This unit is designed to operate indoors, under normal ambient temperatures of 70°-75°F (21°-24°C). The freezer has successfully performed in high ambient temperatures of 104°(40°C) at reduced capacities.

This unit must **NOT** be installed in an area where a water jet or hose can be used. **NEVER** use a water jet or hose to rinse or clean the unit. Failure to follow this instruction may result in electrocution.

This unit must be installed on a level surface to avoid the hazard of tipping. Extreme care should be taken in moving this equipment for any reason. Two or more persons are required to safely move this unit. Failure to comply may result in personal injury or equipment damage.

Uncrate the unit and inspect it for damage. Report any damage to your Taylor Distributor.

This piece of equipment is made in the USA and has USA sizes of hardware. All metric conversions are approximate and vary in size.

Water Connections
(Water Cooled Units Only)

An adequate cold water supply must be provided with a hand shut- off valve. On the underside rear of the base pan, two 3/8" I.P.S. water connections for inlet and outlet have been provided for easy hook- up. 1/2" inside diameter water lines should be connected to the machine. (Flexible lines are recommended, if local codes permit.) Depending on local water conditions, it may be advisable to install a water strainer to prevent foreign substances from clogging the automatic water valve. There will be only one water "in" and one water "out" connection. DO NOT install a hand shut- off valve on the water "out" line! Water should always flow in this order: first, through the automatic water valve; second, through the condenser; and third, through the outlet fitting to an **open trap drain.**

A back flow prevention device is required on the incoming water connection side. Please refer to the applicable National, State, and local codes for determining the proper configuration.

Electrical Connections

In the United States, this equipment is intended to be installed in accordance with the National Electrical Code (NEC), ANSI/NFPA 70-1987. The purpose of the NEC code is the practical safeguarding of persons and property from hazards arising from the use of electricity. This code contains provisions considered necessary for safety. In all other areas of the world, equipment should be installed in accordance with the existing local codes. Please contact your local authorities.

FOLLOW YOUR LOCAL ELECTRICAL CODES!

Each unit requires one power supply for each data label on the unit. Check the data label(s) on the freezer for branch circuit overcurrent protection or fuse, circuit ampacity, and other electrical specifications. Refer to the wiring diagram provided inside of the electrical box for proper power connections.

CAUTION: THIS EQUIPMENT MUST BE PROPERLY GROUNDED! FAILURE TO DO SO CAN RESULT IN SEVERE PERSONAL INJURY FROM ELECTRICAL SHOCK!

DO NOT operate this freezer with larger fuses than specified on the unit data label. Failure to follow this instruction may result in electrocution or damage to the machine.

This unit is provided with an equipotential grounding lug that is to be properly attached to the rear of the frame by the authorized installer. The installation location is marked by the equipotential bonding symbol (5021 of IEC 60417-1) on both the removable panel and the equipment's frame.

Stationary appliances which are not equipped with a power cord and a plug or another device to disconnect the appliance from the power source must have an all-pole disconnecting device with a contact gap of at least 3 mm installed in the external installation.

Appliances that are permanently connected to fixed wiring and for which leakage currents may exceed 10 mA, particularly when disconnected or not used for long periods, or during initial installation, shall have protective devices such as a GFI, to protect against the leakage of current, installed by the authorized personnel to the local codes.

Supply cords used with this unit shall be oil-resistant, sheathed flexible cable not lighter than ordinary polychloroprene or other equivalent synthetic elastomer-sheathed cord (Code designation 60245 IEC 57) installed with the proper cord anchorage to relieve conductors from strain, including twisting, at the terminals and protect the insulation of the conductors from abrasion.

If the supply cord is damaged, it must be replaced by the manufacturer, its service agent, or similarly qualified person, in order to avoid a hazard.

Beater Rotation

Beater rotation must be clockwise as viewed looking into the freezing cylinder.

Note: The following procedures should be performed by a trained service technician.

To correct the rotation on a three-phase unit, interchange any two incoming power supply lines at freezer main terminal block only.

To correct rotation on a single-phase unit, change the leads inside the beater motor. (Follow the diagram printed on the motor.)

Electrical connections are made directly to the terminal block provided in the main control box.

Refrigerant

In consideration of our environment, Taylor uses only earth friendly HFC refrigerants. The HFC refrigerant used in this unit is R404A. This refrigerant is generally considered non-toxic and non-flammable, with an Ozone Depleting Potential (ODP) of zero (0).

However, any gas under pressure is potentially hazardous and must be handled with caution. NEVER fill any refrigerant cylinder completely with liquid. Filling the cylinder to approximately 80% will allow for normal expansion.

Use only R404A refrigerant that conforms to the AHRI standard 700 specification. The use of any other refrigerant may expose users and operators to unexpected safety hazards.

Refrigerant liquid sprayed onto the skin may cause serious damage to tissue. Keep eyes and skin protected. If refrigerant burns should occur, flush immediately with cold water. If burns are severe, apply ice packs and contact a physician immediately.

Taylor reminds technicians to be cautious of government laws regarding refrigerant recovery, recycling, and reclaiming systems. If you have any questions regarding these laws, please contact the factory Service Department.

WARNING: R404A refrigerant used in conjunction with polyolester oils is extremely moisture absorbent. When opening a refrigeration system, the maximum time the system is open must not exceed 15 minutes. Cap all open tubing to prevent humid air or water from being absorbed by the oil.

Section 2 To the Operator

The Model C706 has been carefully engineered and manufactured to give you dependable operation.

This unit, when properly operated and cared for, will produce a consistent quality product. Like all mechanical products, it will require cleaning and maintenance. A minimum amount of care and attention is necessary if the operating procedures outlined in this manual are followed closely.

This Operator's Manual should be read before operating or performing any maintenance on your equipment.

Your Taylor freezer will NOT eventually compensate for and correct any errors during the set- up or filling operations. Thus, the initial assembly and priming procedures are of extreme importance. It is strongly recommended that personnel responsible for the equipment's operation, both assembly and disassembly, go through these procedures together in order to be properly trained and to make sure that no confusion exists.

In the event you should require technical assistance, please contact your local authorized Taylor Distributor.

Note: Your Taylor warranty is valid only if the parts are authorized Taylor parts, purchased from the local authorized Taylor Distributor, and only if all required service work is provided by an authorized Taylor service technician. Taylor reserves the right to deny warranty claims on units or parts if non- Taylor approved parts or incorrect refrigerant were installed in the unit, system modifications were performed beyond factory recommendations, or it is determined that the failure was caused by abuse, misuse, neglect, or failure to follow all operating instructions. For full details of your Taylor Warranty, please see the Limited Warranty section in this manual.

If the crossed out wheeled bin symbol is affixed to this product, it signifies that this product is compliant with the EU Directive as well as other similar legislation in effect after August 13, 2005. Therefore, it must be collected separately after its use is completed, and cannot be disposed as unsorted municipal waste.

The user is responsible for returning the product to the appropriate collection facility, as specified by your local code. For additional information regarding applicable local laws, please contact the municipal facility and/or local distributor.

Compressor Warranty Disclaimer

The refrigeration compressor(s) on this unit are warranted for the term stated in the Limited Warranty section in this manual. However, due to the Montreal Protocol and the U.S. Clean Air Act Amendments of 1990, many new refrigerants are being tested and developed, thus seeking their way into the service industry. Some of these new refrigerants are being advertised as drop- in replacements for numerous applications. It should be noted that in the event of ordinary service to this unit's refrigeration system, **only the refrigerant specified on the affixed data label should be used**. The unauthorized use of alternate refrigerants will void your Taylor compressor warranty. It is the unit owner's responsibility to make this fact known to any technician he employs.

It should also be noted that Taylor does not warrant the refrigerant used in its equipment. For example, if the refrigerant is lost during the course of ordinary service to this machine, Taylor has no obligation to either supply or provide its replacement either at billable or unbillable terms. Taylor does have the obligation to recommend a suitable replacement if the original refrigerant is banned, obsoleted, or no longer available during the five year warranty of the compressor.

Taylor will continue to monitor the industry and test new alternates as they are being developed. Should a new alternate prove, through our testing, that it would be accepted as a drop- in replacement, then the above disclaimer would become null and void. To find out the current status of an alternate refrigerant as it relates to your compressor warranty, call the local Taylor Distributor or the Taylor Factory. Be prepared to provide the Model/Serial Number of the unit in question.

Section 3 Safety

We, at Taylor Company, are concerned about the safety of the operator when he or she comes in contact with the freezer and its parts. Taylor has gone to extreme efforts to design and manufacture built- in safety features to protect both the operator and the service technician. As an example, warning labels have been attached to the freezer to further point out safety precautions.

IMPORTANT - Failure to adhere to the following safety precautions may result in severe personal injury or death. Failure to comply with these warnings may damage the machine and its components. Component damage will result in part replacement expense and service repair expense.

DO NOT operate the freezer without reading this Operator Manual. Failure to follow this instruction may result in equipment damage, poor freezer performance, health hazards, or personal injury.

This appliance is to be used only by trained personnel. It is not intended for use by children or people with reduced physical, sensory, or mental capabilities, or lack of experience and knowledge, unless given supervision or instruction concerning the use of the appliance by a person responsible for their safety. Children should be supervised to ensure that they do not play with the appliance.

This unit is provided with an equipotential grounding lug that is to be properly attached to the rear of the frame by the authorized installer. The installation location is marked by the equipotential bonding symbol (5021 of IEC 60417-1) on both the removable panel and the equipment's frame.

DO NOT use a water jet to clean or rinse the freezer. Failure to follow these instructions may result in serious electrical shock.

- **DO NOT** operate the freezer unless it is properly grounded.
- **DO NOT** operate the freezer with larger fuses than specified on the freezer data label.
- All repairs must be performed by an authorized Taylor service technician.
- The main power supplies to the machine must be disconnected prior to performing any repairs.
- For Cord Connected Units: Only Taylor authorized service technicians or licensed electricians may install a plug or replacement cord on these units.
- Stationary appliances which are not equipped with a power cord and a plug or another device to disconnect the appliance from the power source must have an all-pole disconnecting device with a contact gap of at least 3 mm installed in the external installation.
- Appliances that are permanently connected to fixed wiring and for which leakage currents may exceed 10 mA, particularly when disconnected or not used for long periods, or during initial installation, shall have protective devices such as a GFI, to protect against the leakage of current, installed by the authorized personnel to the local codes.
- Supply cords used with this unit shall be oil-resistant, sheathed flexible cable not lighter than ordinary polychloroprene or other equivalent synthetic elastomer-sheathed cord (Code designation 60245 IEC 57) installed with the proper cord anchorage to relieve conductors from strain, including twisting, at the terminals and protect the insulation of the conductors from abrasion.

  If the supply cord is damaged, it must be replaced by the manufacturer, its service agent, or similarly qualified person, in order to avoid a hazard.

Failure to follow these instructions may result in electrocution. Contact your local authorized Taylor Distributor for service.

- **DO NOT** allow untrained personnel to operate this machine.
- **DO NOT** operate the freezer unless all service panels and access doors are restrained with screws.
- **DO NOT** remove any internal operating parts (examples: freezer door, beater, scraper blades, etc.) unless all control switches are in the OFF position.

Failure to follow these instructions may result in severe personal injury to fingers or hands from hazardous moving parts.

This unit has many sharp edges that can cause severe injuries.

- **DO NOT** put objects or fingers in the door spout. This may contaminate the product and cause severe personal injury from blade contact.
- **USE EXTREME CAUTION** when removing the beater asssembly. The scraper blades are very sharp.
- **CAUTION- SHARP EDGES:** Two people are required to handle the cup/cone dispenser. Protective gloves must be worn and the mounting holes must NOT be used to lift or hold the dispenser. Failure to follow this instruction can result in personal injury to fingers or equipment damage.

This freezer must be placed on a level surface. Failure to comply may result in personal injury or equipment damage.

Access to the service area of the unit is restricted to persons having knowledge and practical experience with the appliance, in particular as far as safety and hygiene are concerned.

Cleaning and sanitizing schedules are governed by your state or local regulatory agencies and must be followed accordingly. Please refer to the cleaning section of this manual for the proper procedure to clean this unit.

This machine is designed to maintain product temperature under 41°F (5°C). Any product being added to this machine must be below 41°F (5°C). Failure to follow this instruction may result in health hazards and poor freezer performance.

DO NOT obstruct air intake and discharge openings:

A minimum of 6” (152 mm) air space is required on both sides and 0” on the rear. Failure to follow this instruction may cause poor freezer performance and damage to the machine.

For Indoor Use Only: This unit is designed to operate indoors, under normal ambient temperatures of 70°-75°F (21°-24°C). The unit has successfully performed in high ambient temperatures of up to 104°F (40°C) at reduced capacities.

DO NOT run the unit without product. Failure to follow this instruction can result in damage to the unit.

NOISE LEVEL: Airborne noise emission does not exceed 78 dB(A) when measured at a distance of 1.0 meter from the surface of the machine and at a height of 1.6 meters from the floor.

Section 4 Operator Parts Identification

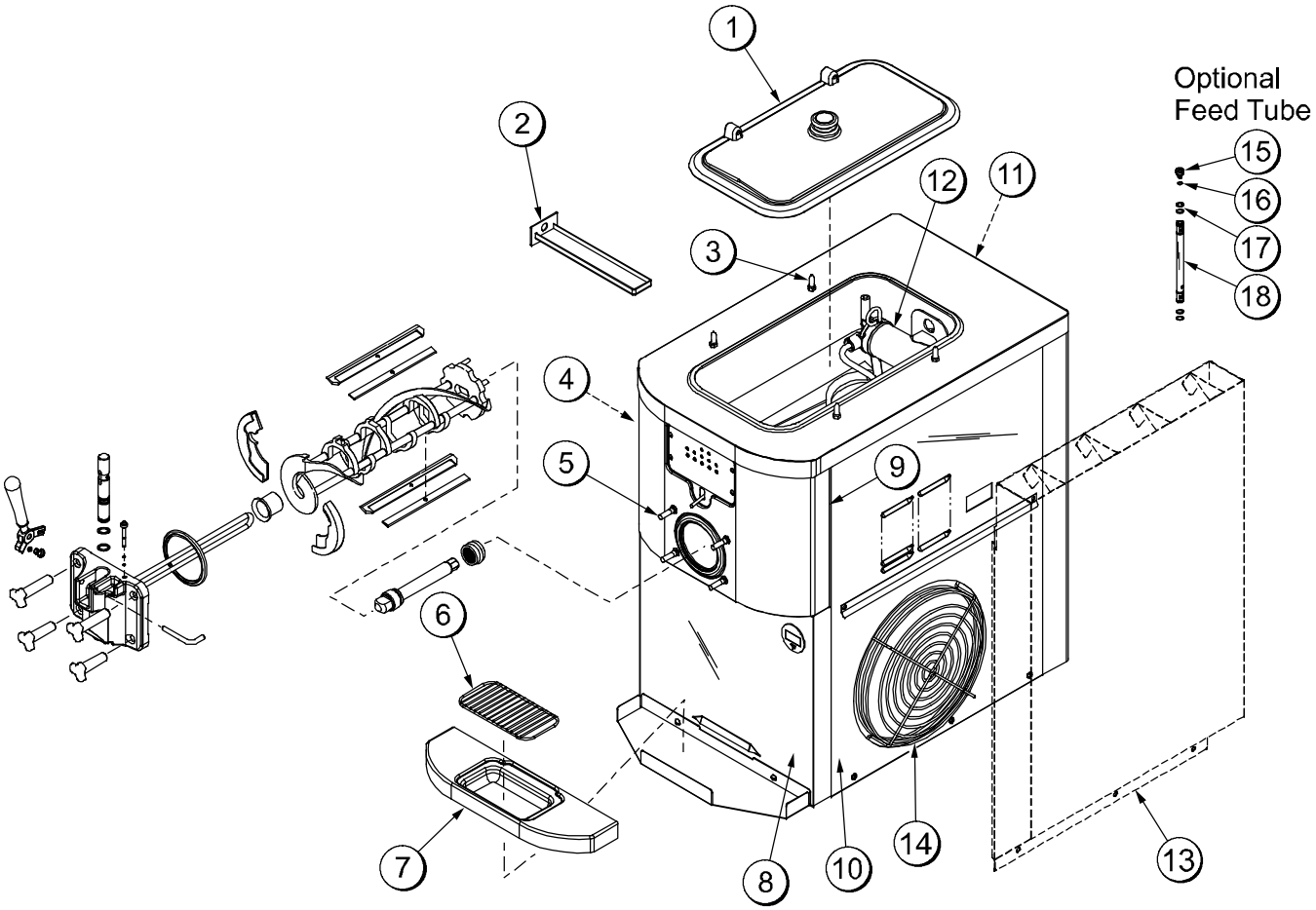

Figure 1

ITEM	DESCRIPTION	PART NO.
1	KIT A.- COVER- HOPPER	X65368- SP
2	PAN- DRIP 11- 5/8 LONG	027503
3	PIN- RETAINING- HOPPER COVER	043934
4	PANEL- SIDE- LEFT	066722- SP2
5	STUD- NOSE CONE	055987
6	SHIELD- SPLASH	049203
7	TRAY- DRIP *BLACK	056858
8	PANEL- FRONT- LOWER	058942
9	PANEL A.- FRONT- UPPER	X58950
10	PANEL A.- SIDE- RIGHT*AC	X64151

ITEM	DESCRIPTION	PART NO.
11	PANEL- REAR	056077
12	PUMP A.- MIX SIMPLIFIED S.S. (SEE PAGE 9)	X57029- 14
13	PANEL A.- SIDE- RIGHT *TAD (OPTIONAL)	X81369- SER
14	GUARD- FAN	028534- 1
15	ORIFICE	022465- 100
16	O- RING- 3/8 OD X .070W	016137
17	O- RING- .643 OD X .077W	018572
18	TUBE A.- FEED- SS- 5/32 HOLE	X29429- 2

Model C706 Single Spout Door and Beater Assembly

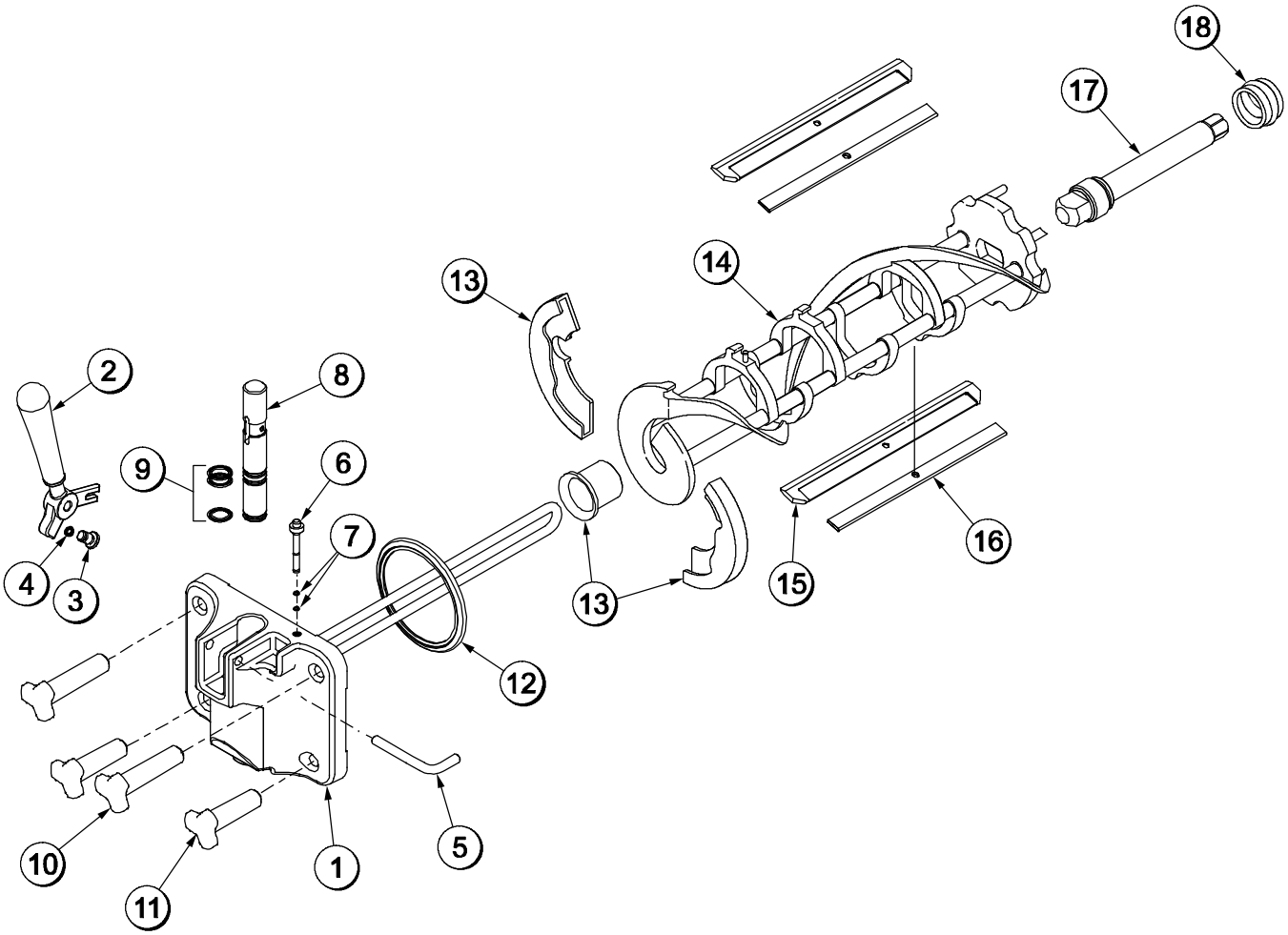

Figure 2

ITEM	DESCRIPTION	PART NO.
1	DOOR A.-W/BAFFLE	X56071-SER
2	HANDLE A.-DRAW-WELDED	X56246
3	SCREW-ADJUSTMENT-5/16-24	056332
4	O-RING-1/4 OD X .070W 50	015872
5	PIN - HANDLE - S.S.	055819
6	PLUG - PRIME	028805
7	O-RING - 3/8 OD X .070W	016137
8	VALVE A. - DRAW	X56072
9	O-RING - 7/8 OD X .103 W	014402

ITEM	DESCRIPTION	PART NO.
10	NUT-STUD BLACK-3.25 LONG	058765
11	NUT-STUD BLACK-2.56 LONG	058764
12	GASKET-DOOR HT 4" DBL	048926
13	KIT A.-BEATER FRONT SHOE	X50350
14	BEATER A. - 3.4 QT. - 1 PIN	X46231
15	BLADE-SCRAPER-PLASTIC	046235
16	CLIP - SCRAPER BLADE - 7"	046236
17	SHAFT - BEATER	056078
18	SEAL - DRIVE SHAFT	032560

X57029- XX Pump A. - Mix Simplified

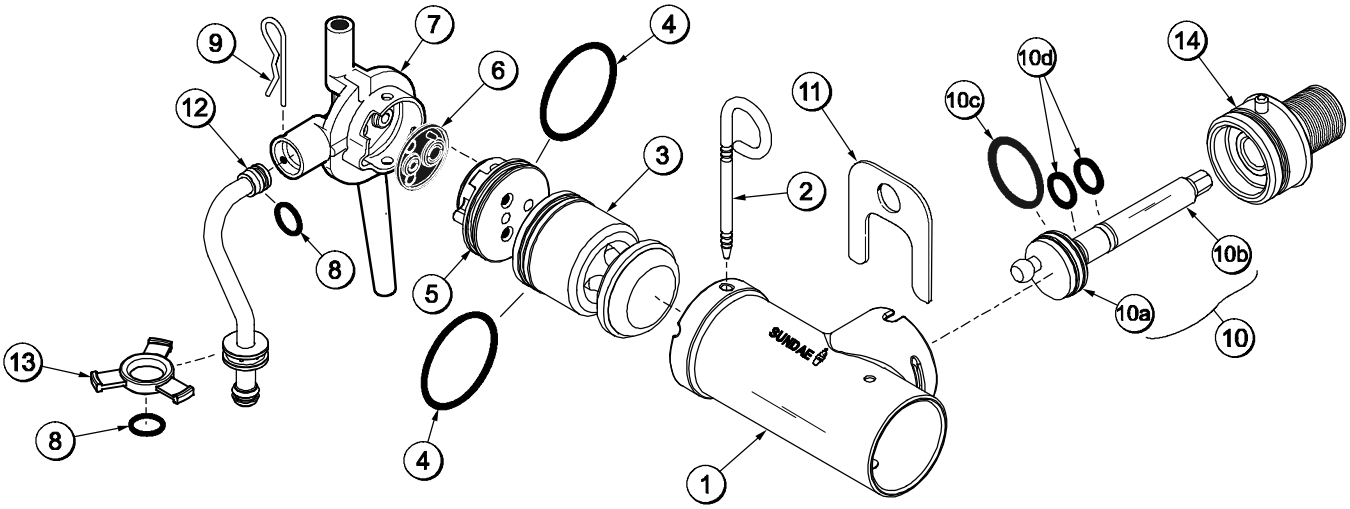

Figure 3

ITEM	DESCRIPTION	PART NO.
1- 7	PUMP A.- MIX SIMPLIFIED S.S.	X57029- 14
1	CYLINDER- PUMP HOPPER SOFTSERVE	057943
2	PIN- RETAINING	X55450
3	PISTON- PUMP- SIMPLIFIED	053526
4	O- RING- 2- 1/8 OD X .139W- #225 *50 TO BAG*	020051
5	CAP- VALVE BODY SS	056874- 14
6	GASKET- SIMPLIFIED PUMP VALVE	053527
7	ADAPTOR- MIX INLET- SS- RED	054825
8	O- RING- 11/16ODX.103W- RED *50 TO BAG*	016132
9	PIN- COTTER- HAIRPIN- 1/8DIA	044731

ITEM	DESCRIPTION	PART NO.
10	SHAFT A.- DRIVE- MIX PUMP- HOPPER	X41947
10a	CRANK- DRIVE- HOPPER MIX PUMP	039235
10b	SHAFT- DRIVE- MIX PUMP- HOPPER	041948
10c	O- RING- 1- 3/4 OD X .139W- CRANK *25 TO BAG*	008904
10d	O- RING 1/2 ID X .139W- SHAFT *25 TO BAG*	048632
11	CLIP- RETAINER- MIX PUMP	044641
12	TUBE A.- FEED- HOPPER S.S.	X56521
13	RING- CHECK- FEED- TUBE	056524
14	SLEEVE A.- MIX PUMP *HT	X44761

Accessories

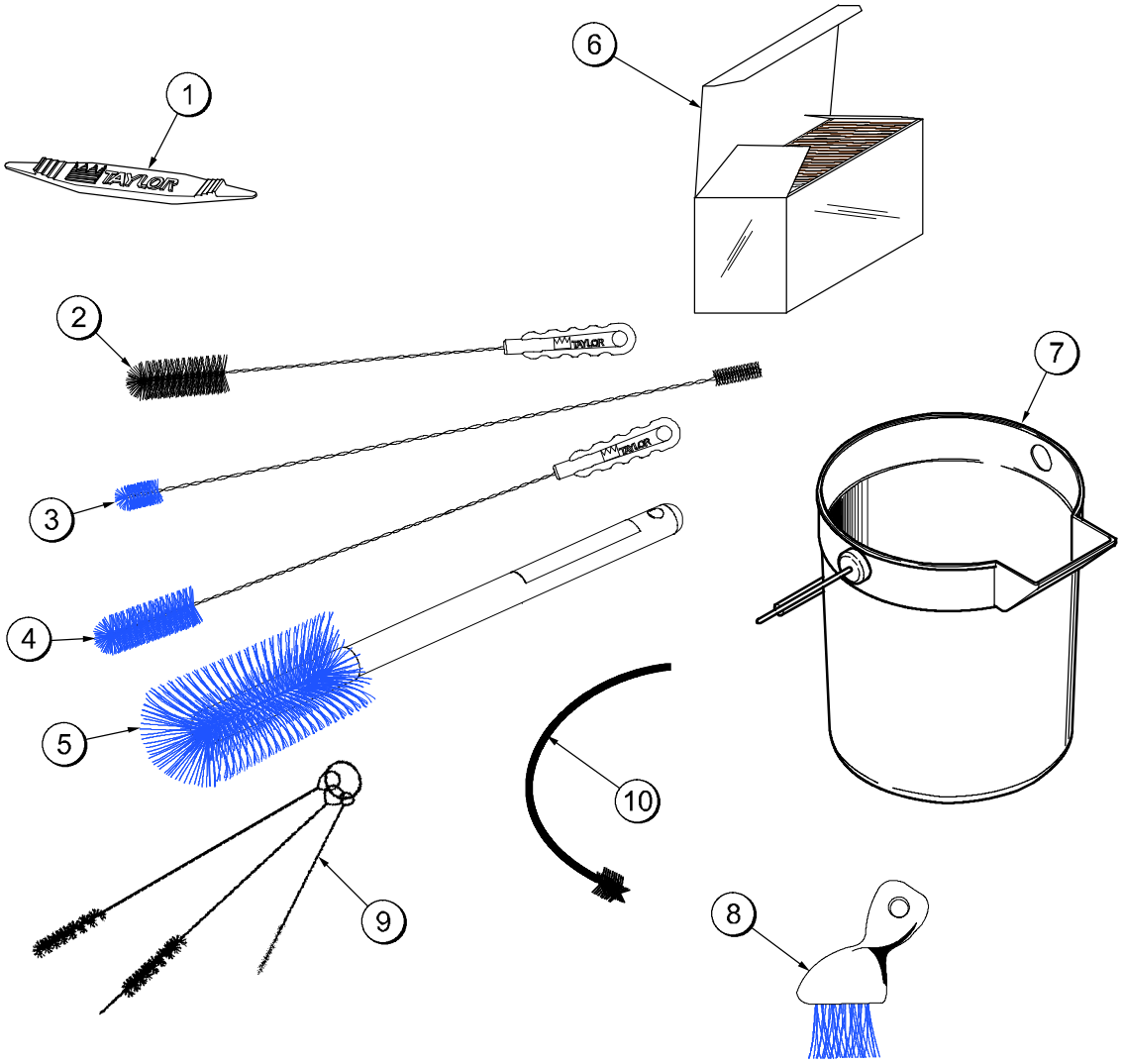

Figure 4

ITEM	DESCRIPTION	PART NO.
1	TOOL-O-RING REMOVAL	048260-WHT
2	BRUSH-REAR·BRG·1IN.DX2IN.	013071
3	BRUSH-DOUBLE·ENDED	013072
4	BRUSH-DRAW·VALVE·1”ODX2	013073
5	BRUSH-MIX·PUMP·BODY-3”X7	023316
*6	SANITIZER STERA SHEEN (100/2 OZ. PACKETS)	055492

ITEM	DESCRIPTION	PART NO.
7	PAIL-10 QT.	013163
8	BRUSH-END-DOOR-SPOUT	039719
9	BRUSH-SET·LVB	050103
10	BRUSH-PUMP·SPOUT	054068

*ITEM 6: A SAMPLE OF STERA SHEEN IS SHIPPED WITH NEW EQUIPMENT. TO ORDER ADDITIONAL SANITIZER, USE THE PART NUMBER LISTED.

C706

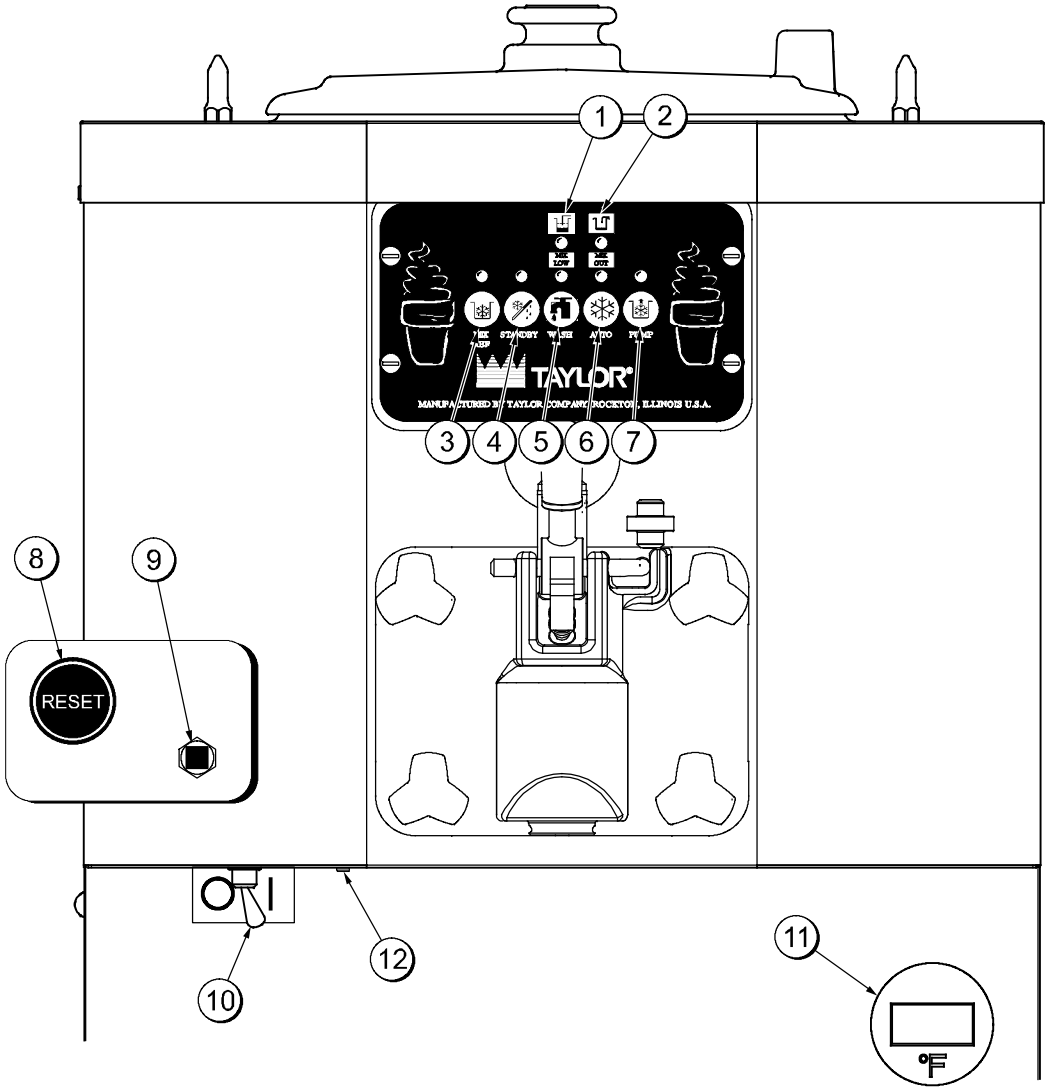

Figure 5

ITEM	DESCRIPTION
1	MIX LOW INDICATOR LIGHT
2	MIX OUT INDICATOR LIGHT
3	MIX REFRIGERATION KEY
4	STANDBY KEY
5	WASH KEY
6	AUTO KEY

ITEM	DESCRIPTION
7	PUMP KEY
8	RESET BUTTON - BEATER MOTOR
9	RESET BUTTON - PUMP
10	POWER SWITCH (TOGGLE)
11	HOPPER TEMP. INDICATOR
*12	OPTIONAL FLAVOR BURST JACK

*MAY NOT BE AVAILABLE ON ALL UNITS.

041118

Symbol Definitions

To better communicate in the International arena, symbols have replaced words on many of our operator switches, function, and fault indicators. Your Taylor equipment is designed with these International symbols.

The following chart identifies the symbol definitions.

= OFF

= ON

= MIX LOW

= MIX OUT

= MIX REF

= STANDBY

= WASH

= AUTO

= PUMP

Power Switch

When placed in the ON position, the power switch allows SOFTECH control panel operation.

Indicator Lights

When the MIX LOW light begins to flash, it indicates that the mix tank has a low supply of mix and should be refilled as soon as possible. When the MIX OUT light begins to flash, it indicates that the mix tank has been almost completely exhausted and has an insufficient supply of mix to operate the freezer. At this time, the STANDBY and AUTO modes are locked out and the freezer shuts down. To initiate the refrigeration system, add mix to the tank and press the AUTO key. The freezer will automatically begin operation.

MIX REF Key

When the MIX REF key is pressed, the light comes on indicating the mix hopper refrigeration system is operating. The MIX REF function cannot be cancelled unless the AUTO or STANDBY modes are cancelled first.

STANDBY Key

The Separate Hopper Refrigeration System (SHR) and the Cylinder Temperature Retention System (CTR) are standard features. The SHR incorporates the use of a separate small refrigeration system to maintain the mix in the hopper below 40°(4.4°C) to assure bacteria control. The CTR works with the SHR to maintain a good quality product. During long “No Sale” periods, it is necessary to warm the product in the freezing cylinder to approximately 35°F to 40°F (1.7°C to 4.4°C) to prevent overbeating and product breakdown.

To activate the SHR and CTR, press the STANDBY key. Remove the air orifice and place the feed tube (**end without the hole**) into the mix inlet hole.

When the STANDBY key is pressed, the light comes on, indicating the CTR (Cylinder Temperature Retention System) has been activated. In the STANDBY mode, the WASH and AUTO functions are automatically cancelled. The MIX REF function is automatically locked in to maintain the mix in the hopper.

To resume normal operation, press the AUTO key. When the unit cycles off, the product in the freezing cylinder will be at serving viscosity. At this time, place the feed tube (**end with the hole**) into the mix inlet hole and install the air orifice.

WASH Key

When the WASH key is pressed, the light comes on. This indicates beater motor operation. The STANDBY or AUTO modes must be cancelled first to activate the WASH mode.

AUTO Key

When the AUTO key is pressed, the light comes on. This indicates that the main refrigeration system has been activated. In the AUTO mode, the WASH or STANDBY functions are automatically cancelled. The MIX REF function is automatically locked in to maintain the mix in the mix hopper.

Note: An indicating light and an audible tone will sound whenever a mode of operation has been pressed. To cancel any function, press the key again. The light and mode of operation will shut off.

Pump Key

When the PUMP key is pressed, the light comes on, indicating the air/mix pump will operate as required.

Beater Motor Reset Button

The reset button is located on the left side of the unit. The reset protects the beater motor from an overload condition. If an overload occurs, the reset mechanism will trip. To properly reset the freezer, press the AUTO key to cancel the cycle. Turn the power switch to the OFF position. Press the reset button firmly.

Do not use metal objects to press the reset button. Failure to follow this instruction may result in electrocution.

Turn the power switch to the ON position. Press the WASH key and observe the freezer's performance. Open the side access panel. Make sure the beater motor is turning the drive shaft in a clockwise direction (from the operator end) without binding.

If the beater motor is turning properly, press the WASH key to cancel the cycle. Press the AUTO key to resume normal operation. If the freezer shuts down again, contact a service technician.

Air/Mix Pump Reset Button

The reset button for the pump is located on the left side of the unit. This reset protects the pump from an overload condition. Should an overload occur, the reset mechanism will trip. To reset the pump, press the reset button firmly.

Adjustable Draw Handle

The Model C706 features an adjustable draw handle to provide the best portion control. The draw handle should be adjusted to provide a flow rate of 5 to 7- 1/2 oz. of product per 10 seconds. To INCREASE the flow rate, turn the screw CLOCKWISE. Turn the screw COUNTER- CLOCKWISE to DECREASE the flow rate.

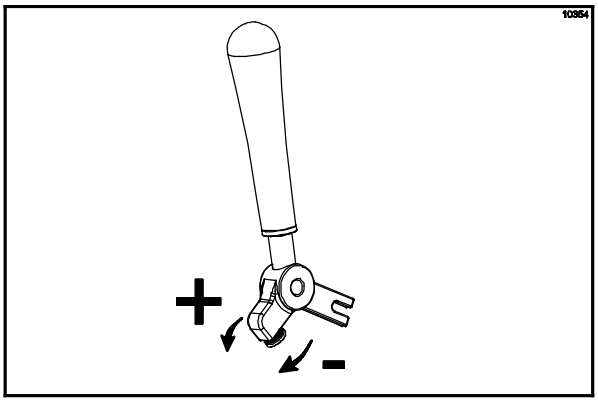

Figure 6

Feed Tube (Back- up Option)

If the air/mix pump has become inoperable because of a missing or damaged part, the operator can temporarily operate the unit using the feed tube. The product ejection rate will be slower when the feed tube is used instead of the air/mix pump.

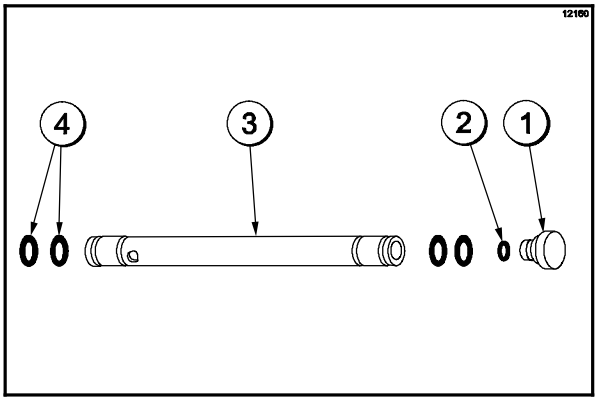

Figure 7

ITEM	DESCRIPTION	PART NO.
1	ORIFICE	022465- 100
2	O- RING- 3/8 OD X .070 W	016137
3	TUBE A.- FEED- SS 5/32 HOLE	X29429- 2
4	O- RING- .643 OD X .077 W	018572

The feed tube serves two purposes. One end of the tube has a hole and the other end does not.

1. **Normal Operation**

   During normal operation, the end of the feed tube with the hole is placed into the mix inlet hole. Every time the draw handle is raised, new mix and air from the hopper flow into the freezing cylinder. This keeps the freezing cylinder properly loaded and maintains overrun.

2. **Long “No Sale” Periods**

   During long “No Sale” periods, the unit can be placed into the Standby mode. This maintains product temperatures below 40°F (4.4°C) in both the hopper and the freezing cylinder, and helps prevent overbeating and product breakdown.

   To place the unit into the Standby mode, press the STANDBY key. Remove the air orifice. Lubricate the o- rings located on the end of the feed tube without the hole. Place that end of the tube into the mix inlet hole.This will prevent any mix from entering the freezing cylinder.

   Note: The air orifice is used to meter a certain amount of air into the freezing cylinder. The air orifice maintains overrun and allows enough mix to enter the freezing cylinder after a draw.

The C706 unit stores mix in a hopper. The mix is pumped into the freezing cylinder. It has a 3.4 quart (3.2 liter) capacity freezing cylinder and a 20 quart (18.9 liter) mix hopper.

We begin our instructions at the point where we enter the store in the morning and find the parts disassembled and laid out to air dry from the previous night's cleaning.

These opening procedures will show you how to assemble these parts into the freezer, sanitize them, and prime the freezer with fresh mix in preparation to serve your first portion.

If you are disassembling the machine for the first time or need information to get to this starting point in our instructions, turn to page 26, "Disassembly", and start there.

Prior to Set- Up (Freezers With Topping Pumps Only)

Remove the stainless steel syrup jar with the topping pump from the syrup rail. Check the water level in the well. Make sure the water is filled to the indicating mark on the inside wall (16 oz / 473 ml). Check the water daily.

Place the heater switch in the ON position. The heating process will take approximately 1- 1/4 hours.

Prepare a pail of an approved 100 PPM sanitizing solution (examples: Kay- 5® or Stera- Sheen®). USE WARM WATER AND FOLLOW THE MANUFACTURER'S SPECIFICATIONS.

Sanitize the pump by placing the entire asssembly in the solution. Pump the solution through the pump until it is sanitized.

Fill the heated and the room temperature syrup jars with toppings. Place the topping pump in the heated syrup jar. Sanitize the ladle and place it in the room temperature jar.

Assembly

Note: When lubricating parts, use an approved food grade lubricant (example: Taylor Lube).

MAKE SURE POWER SWITCH IS IN THE "OFF" POSITION! Failure to follow this instruction may result in severe personal injury from hazardous moving parts.

Step 1
Lubricate the groove and shaft portion that comes in contact with the bearing on the beater drive shaft. Slide the seal over the shaft and groove until it snaps into place. **DO NOT** lubricate the hex end of the drive shaft.

Fill the inside portion of the seal with 1/4" more lubricant and lubricate the flat side of the seal that fits onto the rear shell bearing.

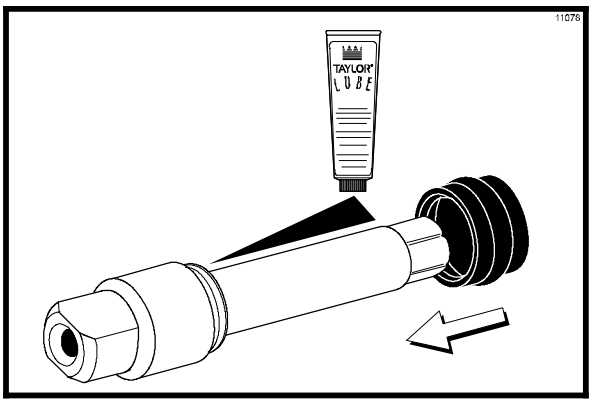

Figure 8

Insert the drive shaft into the freezing cylinder, hex end first, and into the rear shell bearing until the seal fits securely over the rear shell bearing. Engage the hex end firmly into the drive coupling. Be sure the drive shaft fits into the drive coupling without binding.

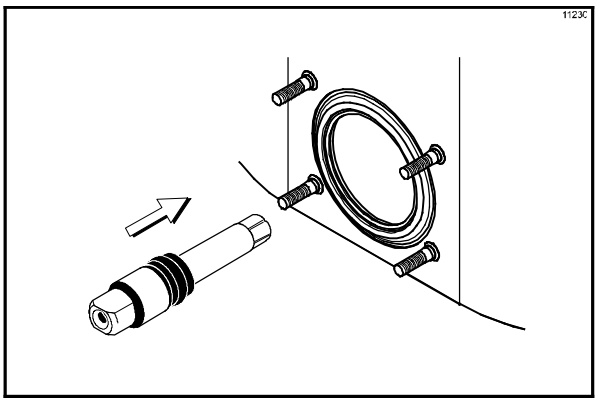

Figure 9

Step 2
Before installing the beater assembly, inspect the scraper blades and clips.

Check the scraper blades for any signs of wear or damage. If a scraper blade is nicked or worn, replace both blades.

Check the scraper blade clips to make sure they are not bent and the slot is even for the entire length of the clip. Replace any damaged clips.

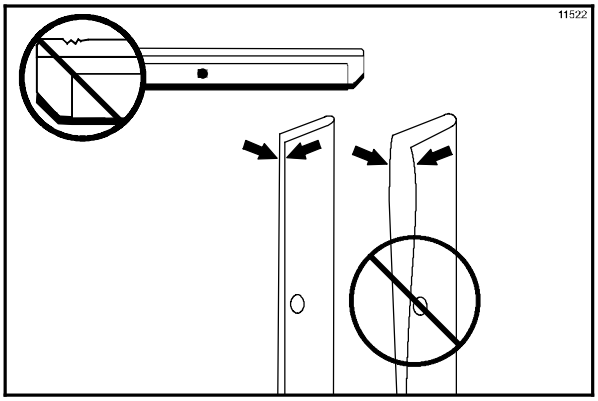

Figure 10

Step 3
If the blades and clips are in good condition, install the scraper blade clips over the scraper blades. Place the rear scraper blade over the rear holding pin on the beater.

Note: The hole on the scraper blade must fit securely over the pin to prevent costly damage.

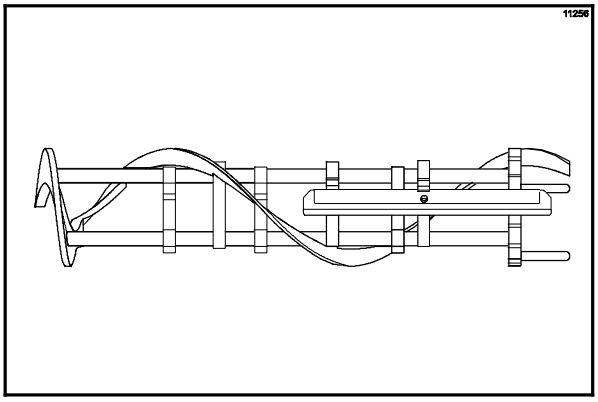

Figure 11

Holding the rear blade on the beater, slide it halfway into the freezing cylinder. Install the front scraper blade over the front holding pin.

Step 4
Before installing the beater shoes, check the shoes for any nicks, cracks, or signs of wear. If any defects are present, replace the beater shoes.

Step 5
If the beater shoes are in good condition, install the beater shoes.

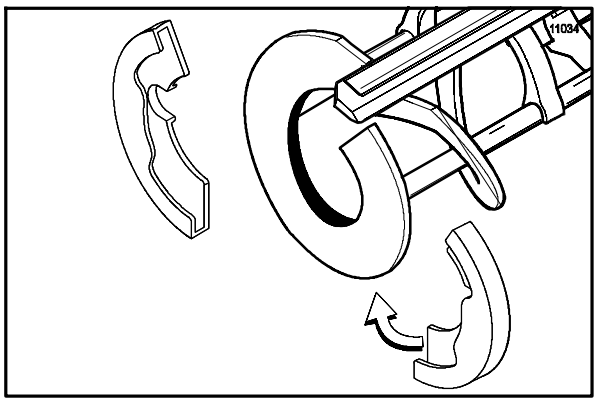

Figure 12

Slide the beater assembly the rest of the way into the freezing cylinder.

Make sure the beater assembly is in position over the drive shaft. Turn the beater slightly to be certain that the beater is properly seated. When in position, the beater will not protrude beyond the front of the freezing cylinder.

Step 6
Before assembling the freezer door, check the following for any nicks, cracks, or signs of wear: door bearing, door gasket, draw valve, o- rings, and all sides of the door assembly, including the inside of the draw valve bore. Replace any damaged parts.

Step 7
If the parts are in good condition, place the door gasket into the groove on the back side of the freezer door. Slide the white plastic front bearing over the baffle rod onto the bearing hub making certain that the flanged end of the bearing is resting against the freezer door. **Do not lubricate the gasket or the front bearing.**

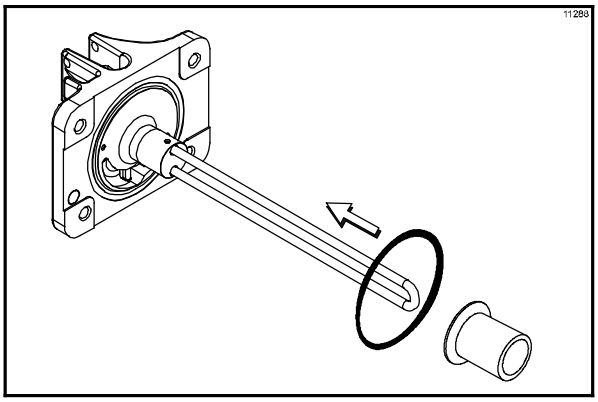

Figure 13

Slide the two o- rings into the grooves on the prime plug. Apply an even coat of Taylor Lube to the o- rings and shaft.

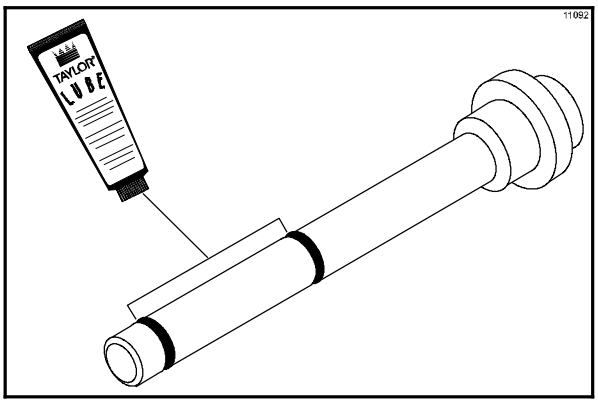

Figure 14

Insert the prime plug into the hole in the top of the freezer door, and push down.

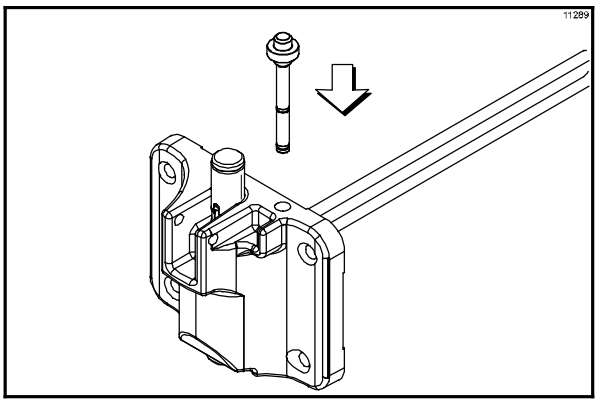

Figure 15

Step 8
Slide the three o- rings into the grooves on the draw valve, and lubricate.

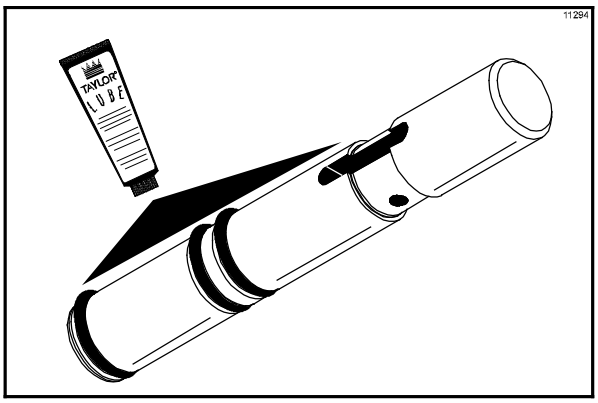

Figure 16

Step 9
Insert the draw valve from the **top** until the draw valve is at the bottom.

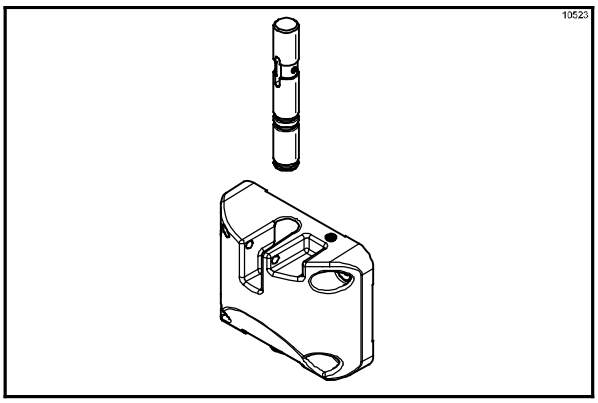

Figure 17

Step 10
Install the adjustable draw handle Slide the fork over the bar in the slot of the draw valve. Secure with pivot pin.

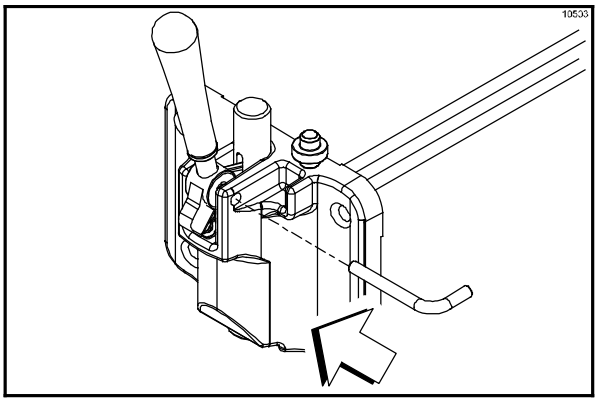

Figure 18

Note: This unit features an adjustable draw handle to provide the best portion control. The draw handle can be adjusted for different flow rates. See page 13 for more information on adjusting this handle.

Step 11
Insert the baffle rod through the opening in the beater and seat the door flush with the freezing cylinder. With the door seated on the freezer studs, install the handscrews. Tighten equally in a crisscross pattern to insure the door is snug.

Step 12
Install the front drip tray and the splash shield under the door spout.

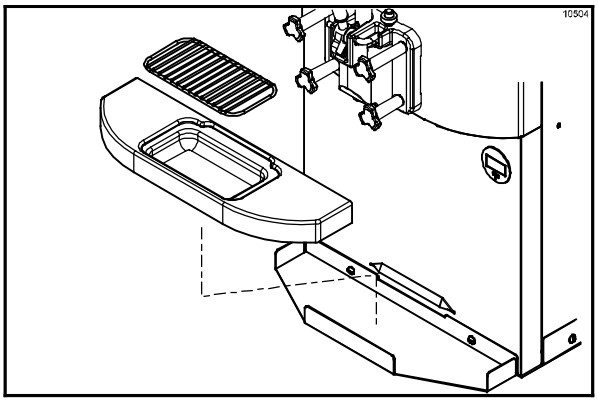

Figure 19

Step 13
Slide the rear drip pan into the hole in the side panel. Slide the pump drip pan into the hole in the back panel.

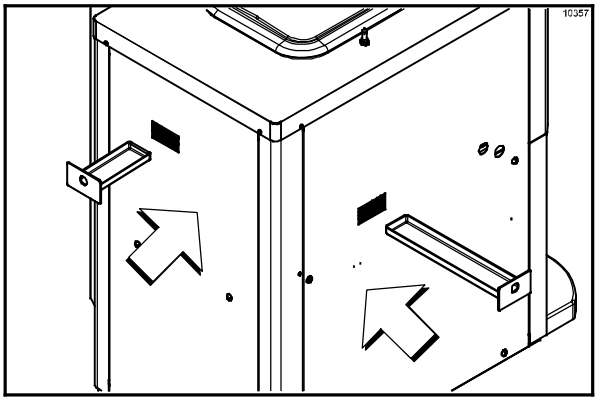

Figure 20

Mix Hopper Assembly

Step 1
Inspect the rubber and plastic pump parts. The o- rings, check rings, and gaskets must be in 100% good condition for the pump and entire machine to operate properly. They cannot properly serve their intended function if nicks, cuts, or holes in the material are present.

Inspect the plastic pump parts for cracks, wear, and de- lamination of plastic.

Replace any defective parts immediately and discard the old.

Step 2
Assemble the mix inlet assembly. Slide the o- ring into the groove of the valve body cap. DO NOT lubricate the o- ring.

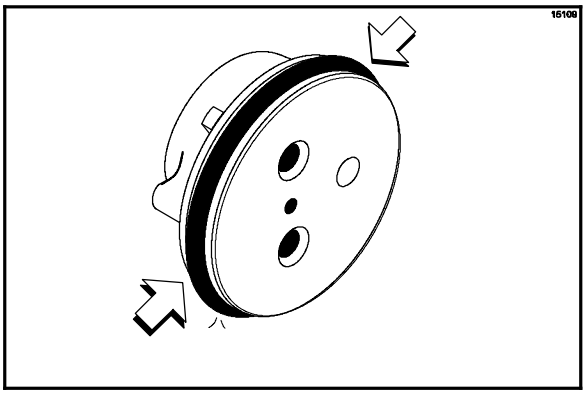

Figure 21

Step 3
Slide the pump valve gasket into the holes on the cap. DO NOT lubricate the gasket.

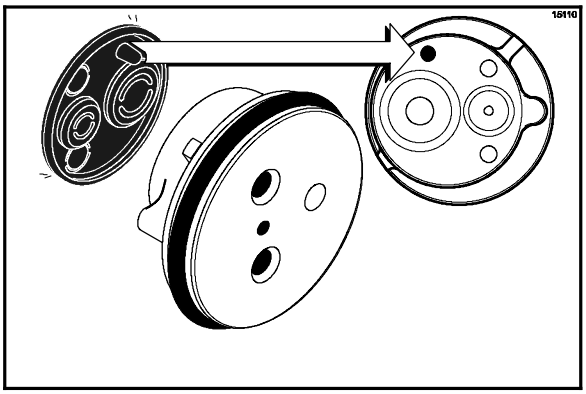

Figure 22

Step 4
Insert the valve body cap into the hole in the mix inlet adapter.

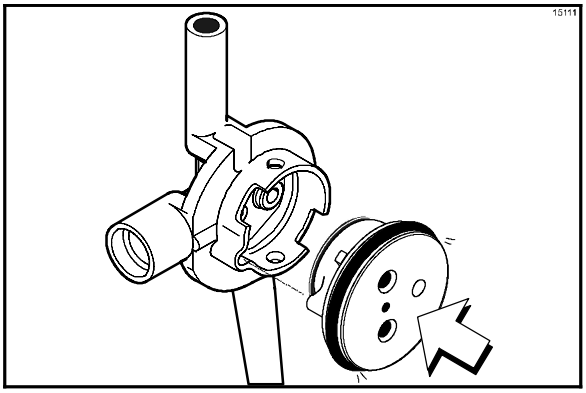

Figure 23

Step 5
Assemble the piston. Slide the red o- ring into the groove of the piston. DO NOT lubricate the o- ring.

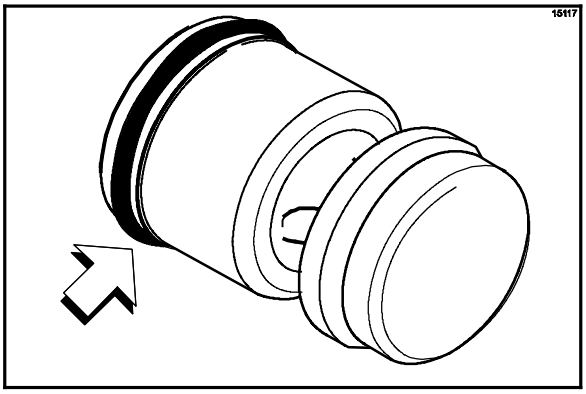

Figure 24

Step 6
Lightly lubricate the inside of the pump cylinder at the bottom with a paper thin layer of lubricant.

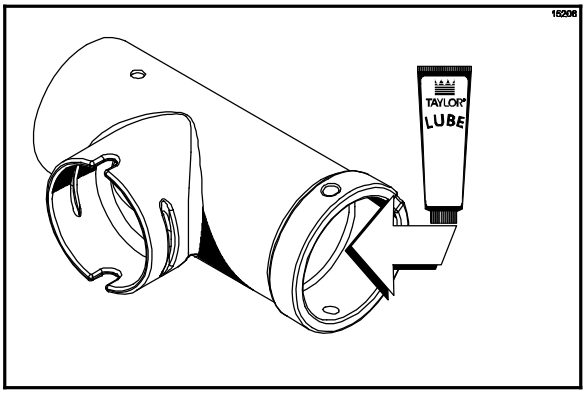

Figure 25

Step 7
Insert the piston into the bottom of the pump cylinder.

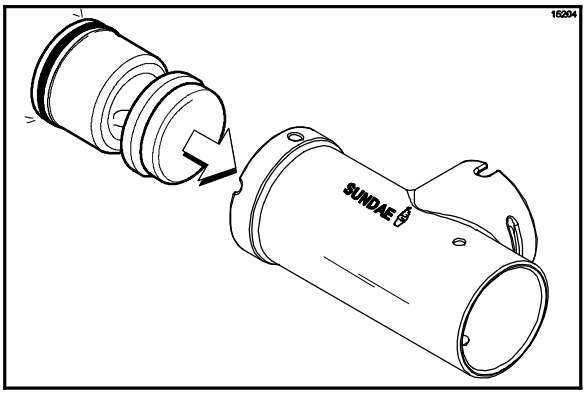

Figure 26

Step 8
Insert the mix inlet assembly into the pump cylinder.

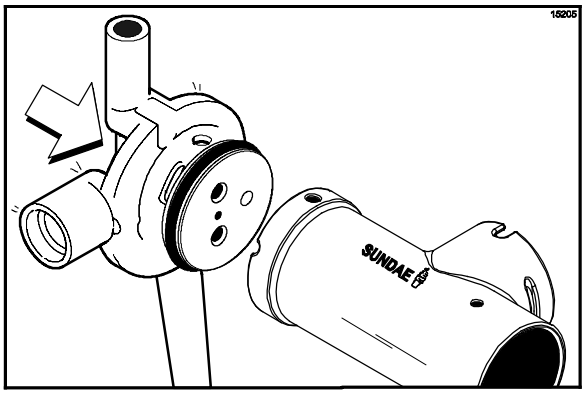

Figure 27

The drive hole in the mix inlet adaptor must be visible through the drive hole opening in the pump cylinder and the aligning notch located at the base of the adapter must be positioned into the notch at the bottom of the pump cylinder.

Step 9
Secure the pump parts in position by sliding the retaining pin through the cross holes located at the bottom of the pump cylinder.

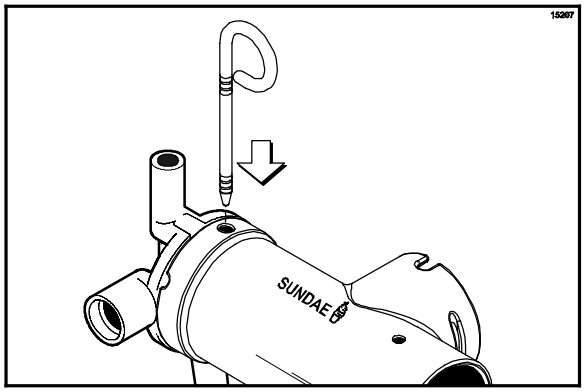

Figure 28

Note: The head of the retaining pin should be facing UP with the pump correctly installed.

Step 10
Assemble the feed tube assembly. Slide the valve o- ring into the groove of the feed tube.

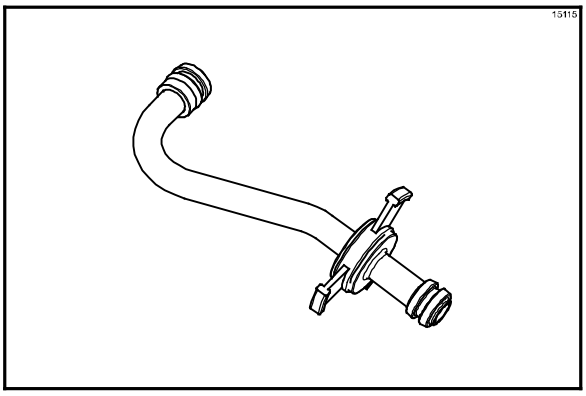

Figure 29

Step 11
Install one red o- ring on each end of the mix feed tube, and thoroughly lubricate.

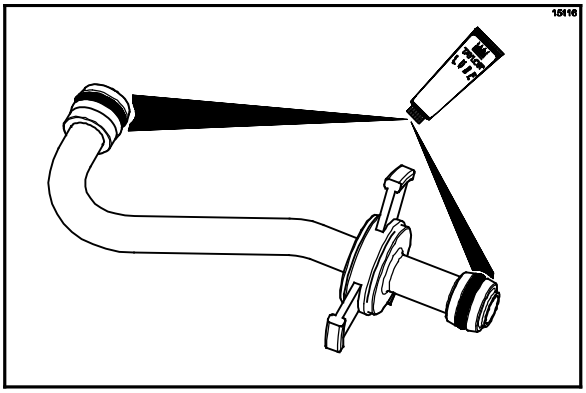

Figure 30

Step 12
Lay the pump assembly, pump clip, mix feed tube, and cotter pin in the bottom of the mix hopper for sanitizing.

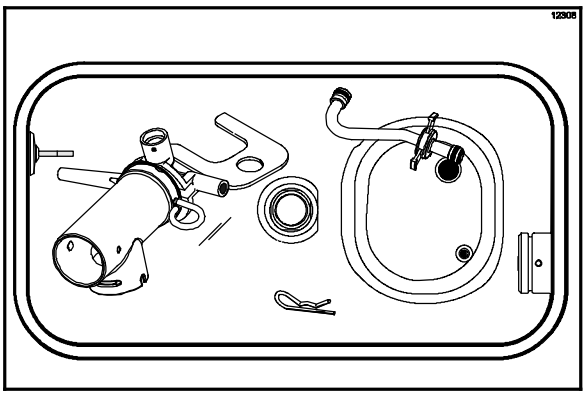

Figure 31

Step 13
Slide the large black o- ring and the two smaller black o- rings into the grooves on the drive shaft. Thoroughly lubricate the o- rings and shaft. DO NOT lubricate the hex end of the shaft. (See Figure 32.)

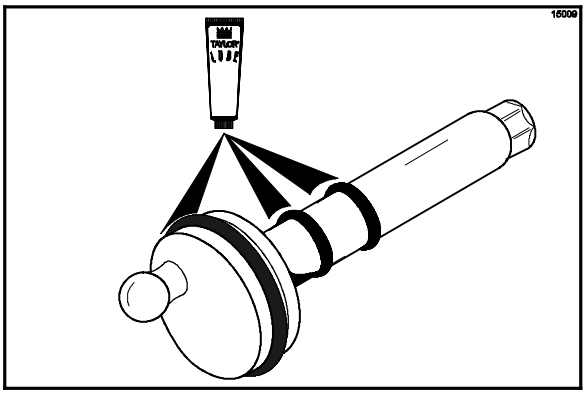

Figure 32

Step 14
Install the hex end of the drive shaft into the drive hub at the rear wall of the mix hopper. (See Figure 33.)

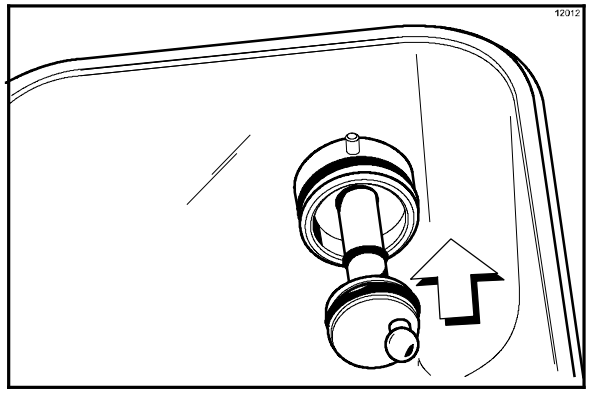

Figure 33

Note: For ease in installing the pump, position the ball crank of the drive shaft in the 3 o'clock position.

Sanitizing

Step 1
Prepare an approved 100 PPM sanitizing solution (examples: 2- 1/2 gal. [9.5 liters] of Kay- 5® or 2 gal. [7.6 liters] of Stera- Sheen®). USE WARM WATER AND FOLLOW THE MANUFACTURER'S SPECIFICATIONS.

Step 2
Pour the sanitizing solution over all the parts in the bottom of the mix hopper and allow it to flow into the freezing cylinder.

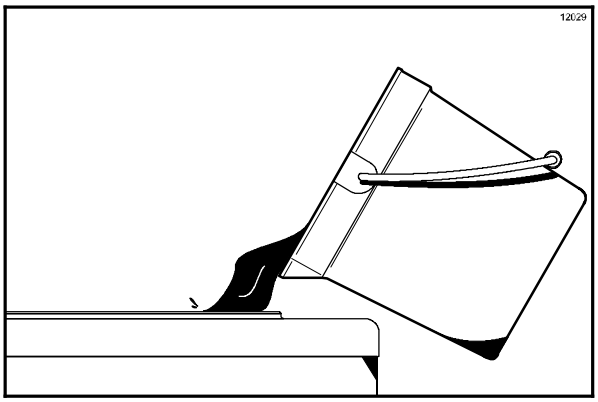

Figure 34

Note: You have just sanitized the mix hopper and parts; therefore, be sure your hands are clean and sanitized before going on in these instructions.

Step 3
While the solution is flowing into the freezing cylinder, take particular care to brush- clean the mix level sensing probe on the front wall and the bottom of the hopper, the mix hopper, the mix inlet hole, the air/mix pump, the pump clip, the mix feed tube, and the locking clip.

Step 4
Install the pump assembly. To position the pump on the drive hub at the rear of the mix hopper, align the drive hole in the piston with the drive crank of the drive shaft. Secure the pump in place by slipping the pump clip over the collar of the pump, making sure the clip fits into the grooves in the collar.

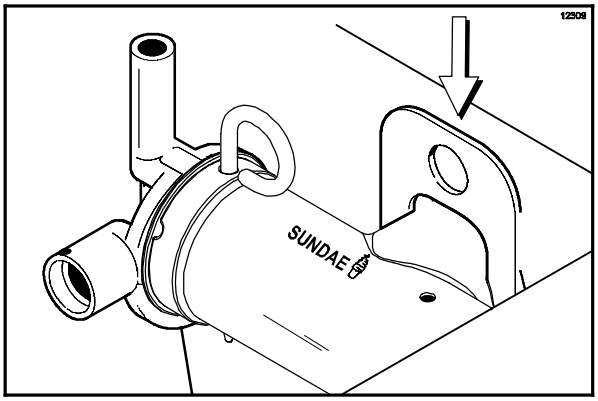

Figure 35

Step 5
Place the power switch in the ON position.

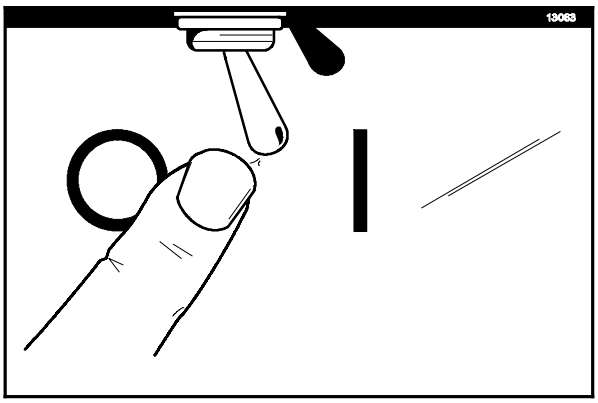

Figure 36

Step 6
Press the WASH key. This will cause the sanitizing solution in the freezing cylinder to agitate. Allow it to agitate for five minutes.

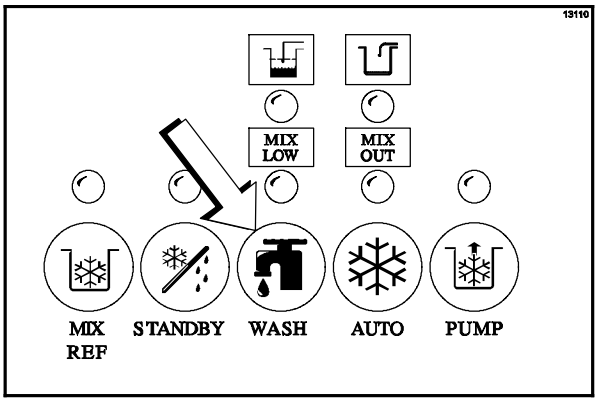

Figure 37

Step 7
With an empty pail beneath the door spout, raise the prime plug and press the PUMP key.

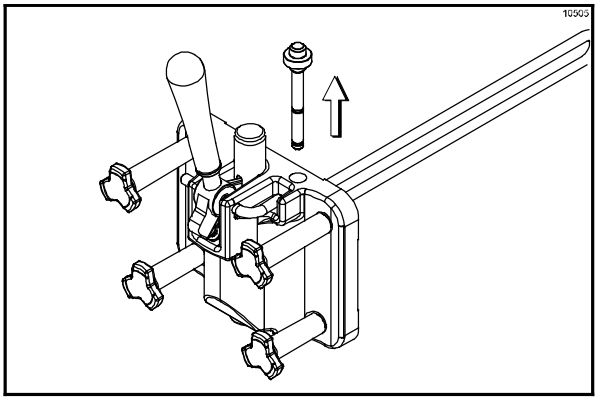

Figure 38

Step 8
When a steady stream of sanitizing solution is flowing from the prime plug opening in the bottom of the freezer door, pull the draw handle down. Draw off all of the sanitizing solution.

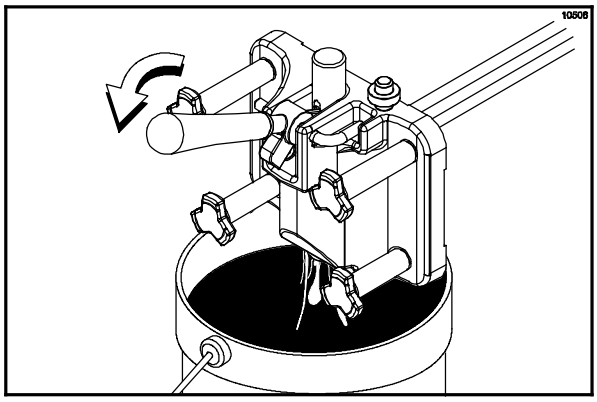

Figure 39

Step 9
Once the sanitizer stops flowing from the door spout, raise the draw handle. Press the WASH and PUMP keys, cancelling the beater motor and pump operation.

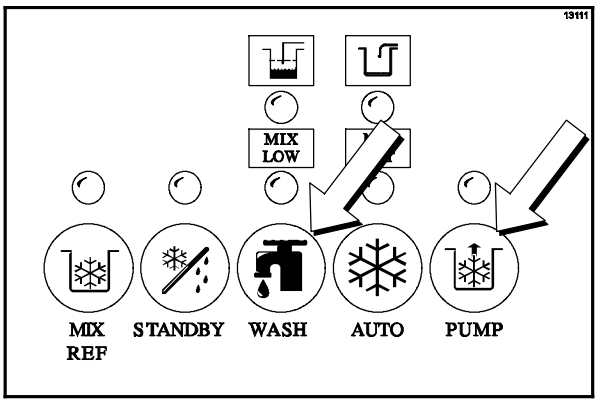

Figure 40

IMPORTANT! The unit must NOT be placed in AUTO until all sanitizing solution has been removed from the freezing cylinder and proper priming procedures have been completed. Failure to follow this instruction may result in damage to the freezing cylinder.

Note: Be sure your hands are clean and sanitized before continuing these instructions.

Step 10
Lubricate the mix feed tube o- rings located on the end of the tube with the small hole on the side. Stand the mix feed tube in the corner of the mix hopper. Place the locking clip in position on the outlet fitting of the pump.

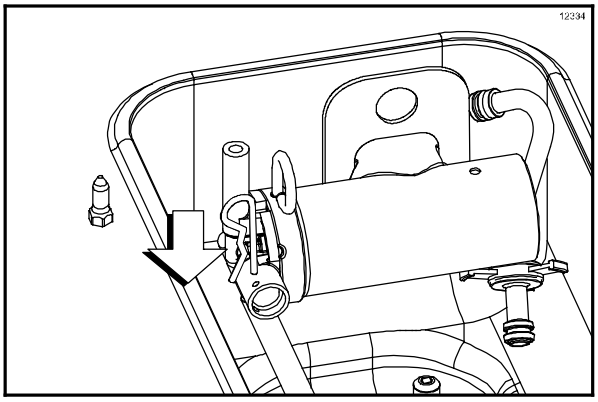

Figure 41

Priming

Step 1
Place an empty pail beneath the door spout and lower the draw handle. Be sure the prime plug is still in the UP position. Pour two gallons (7.6 liters) of **fresh** mix into the hopper and allow it to flow into the freezing cylinder. This will force out any remaining sanitizing solution. When full strength mix is flowing from the door spout, raise the draw handle.

Note: Use only FRESH mix when priming the freezer.

Step 2
Once a **steady** stream of mix starts to flow from the prime plug opening in the bottom of the freezer door, push down the prime plug.

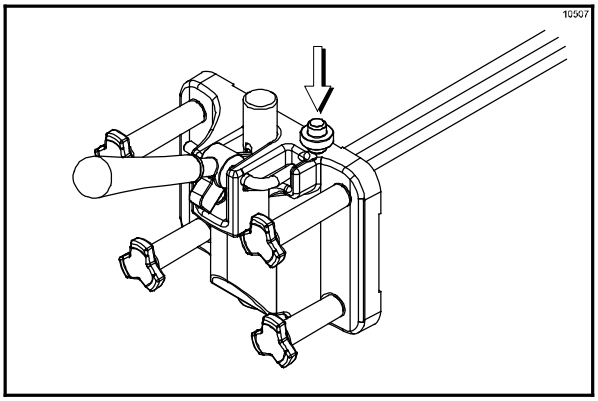

Figure 42

IMPORTANT! Failure to remove all sanitizing solution may result in damage to the freezing cylinder.

Step 3
When the mix stops bubbling down into the freezing cylinder, insert the mix feed tube. Remove the locking clip from the outlet fitting of the mix pump. Insert the outlet end of the mix feed tube into the mix inlet hole in the mix hopper. Place the inlet end of the mix feed tube into the outlet fitting of the mix pump. Secure with locking clip.

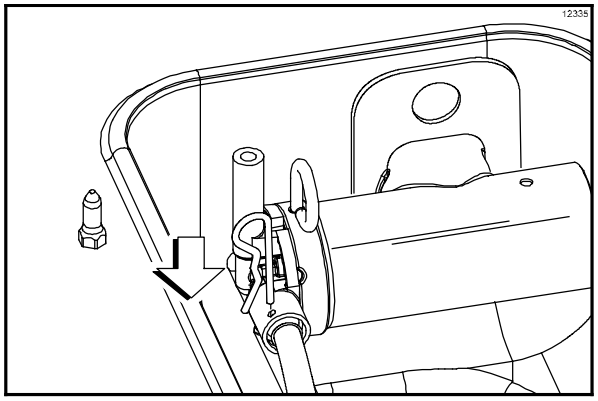

Figure 43

Step 4
Press the AUTO key. When the unit cycles off, the product will be at serving viscosity.

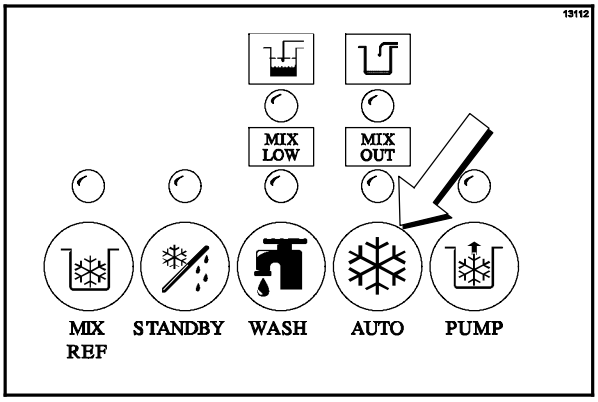

Figure 44

Step 5
Fill the hopper with **fresh** mix. As the mix level comes in contact with the mix level sensing probe on the front wall of the hopper, the MIX LOW light will shut off.

Note: The MIX REF light will come on, indicating the mix refrigeration system is maintaining mix in the mix hopper.

Step 6
Place the mix hopper cover in position.

Closing Procedure

To disassemble your unit, the following items will be needed:

- Two cleaning pails
- Sanitized stainless steel rerun can with lid
- Necessary brushes (provided with freezer)
- Cleaner
- Single service towels

Draining Product From the Freezing Cylinder

Step 1
Press the AUTO key, cancelling compressor and beater motor operation.

Press the MIX REF key, cancelling the mix hopper refrigeration system.

Step 2
Remove the hopper cover and take it to the sink for cleaning.

Step 3
If local health codes permit the use of rerun, place a sanitized, NSF approved stainless steel rerun container beneath the door spout. Press the WASH and PUMP keys. Lower the draw handle and drain the remaining product from the freezing cylinder and mix hopper. When the flow of product stops, press the WASH and PUMP keys and close the draw valve. Place the sanitized lid on the rerun container and place it in the walk- in cooler.

Note: If local health codes DO NOT permit the use of rerun, the product must be discarded. Drain the product into a pail and properly discard it.

ALWAYS FOLLOW LOCAL HEALTH CODES.

Rinsing

Step 1
Pour two gallons (7.6 liters) of **cool** clean water into the mix hopper. With the brushes provided, scrub the mix hopper, the mix inlet hole and the mix level sensing probe.

Step 2
With a pail beneath the door spout, raise the prime plug and press the WASH key.

Step 3
When a steady stream of rinse water is flowing from the prime plug opening in the bottom of the freezer door, lower the draw handle. Drain all the rinse water from the freezing cylinder. When the water stops flowing from the door spout, raise the draw handle and press the WASH key cancelling the WASH mode.

Repeat this procedure until the rinse water being drawn from the freezing cylinder is **clear**.

Step 4
Remove the assembled air/mix pump and take to the sink for further disassembly and cleaning.

Cleaning

Step 1
Prepare an approved 100 PPM cleaning solution (examples: 2- 1/2 gal. [9.5 liters] of Kay- 5® or 2 gal. [7.6 liters] of Stera- Sheen®). USE WARM WATER AND FOLLOW THE MANUFACTURER'S SPECIFICATIONS.

Step 2
Push down the prime plug. Pour the two gallons (7.6 liters) of cleaning solution into the mix hopper.

Step 3
While the solution is flowing into the freezing cylinder, brush clean the mix hopper, mix level sensing probes and the mix inlet hole.

Step 4
Press the WASH key. This will cause the cleaning solution in the freezing cylinder to be agitated.

Step 5
Place an empty pail beneath the door spout and raise the prime plug.

Step 6
When a steady stream of cleaning solution is flowing from the prime plug opening in the bottom of the freezer door, lower the draw handle. Draw off all of the solution.

Step 7
Once the cleaning solution stops flowing from the door spout, raise the draw handle and press the WASH key, cancelling the WASH mode.

Disassembly

Step 1

Be sure the power switch is in the OFF position. No lights should be illuminated on the control panel. **Note:** Failure to follow this instruction may result in severe personal injury to fingers or hands from hazardous moving parts.

Step 2
Remove the handscrews, freezer door, beater, beater shoes, scraper blades, and drive shaft from the freezing cylinder. Take these parts to the sink for cleaning.

Step 3
Remove the drive shaft from the drive hub in the rear wall of the mix hopper.

Step 4
Remove the front drip tray and the splash shield.

Brush Cleaning

Make sure all brushes provided with the freezer are available for brush cleaning.

Step 1
Prepare a sink with an approved cleaning solution (examples: Kay- 5® or Stera- Sheen®). USE WARM WATER AND FOLLOW THE MANUFACTURER'S SPECIFICATIONS. If another approved cleaner is used, dilute according to label instructions.

IMPORTANT: Follow label directions, as too STRONG of a solution can cause parts damage, while too MILD of a solution will not provide adequate cleaning. Make sure all brushes provided with the freezer are available for brush cleaning.

Step 2
Remove the seal from the drive shaft.

Step 3
From the freezer door remove the gasket, front bearing, pivot pin, adjustable draw handle, draw valve, and prime plug. Remove all o- rings.

Note: To remove the o- rings, use a single service towel to grasp the o- ring. Apply pressure in an upward direction until the o- ring pops out of its groove. With the other hand, push the top of the o- ring forward and it will roll out of the groove and can be easily removed. If there is more than one o- ring to be removed, always remove the rear o- ring first. This will allow the o- ring to slide over the forward rings without falling into the open grooves.

Step 4
From the pump cylinder; remove the retaining pin, mix inlet adapter, valve cap, and the piston. Remove all the o- rings and the valve gasket.

Step 5
Return to the freezer with a small amount of cleaning solution. With the black bristle brush, brush clean the rear shell bearing at the back of the freezing cylinder. Brush clean the drive hub opening in the rear wall of the mix hopper.

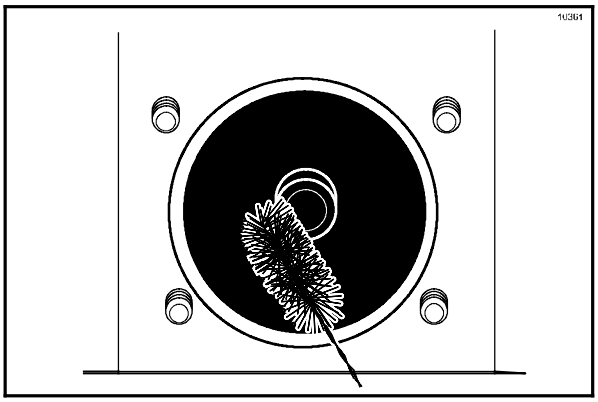

Figure 45

Step 6
Remove the rear drip pan from the side panel and take it to the sink for cleaning.

Note: If the drip pan is filled with an excessive amount of mix, refer to the Troubleshooting Guide.

Step 7
Thoroughly brush clean all disassembled parts in the cleaning solution, making sure all lubricant and mix film is removed. Take particular care to brush clean the hole for the draw valve in the freezer door. Place all cleaned parts on a clean, dry surface to air dry overnight.

Note: For proper brush cleaning of the adapter, cap, feed tube, and orifice, refer to the following illustration which indicates proper brush usage.

Rinse all parts with clean, warm water. Place the pump parts on a clean, dry surface.

Step 8
Wipe clean all exterior surfaces of the freezer.

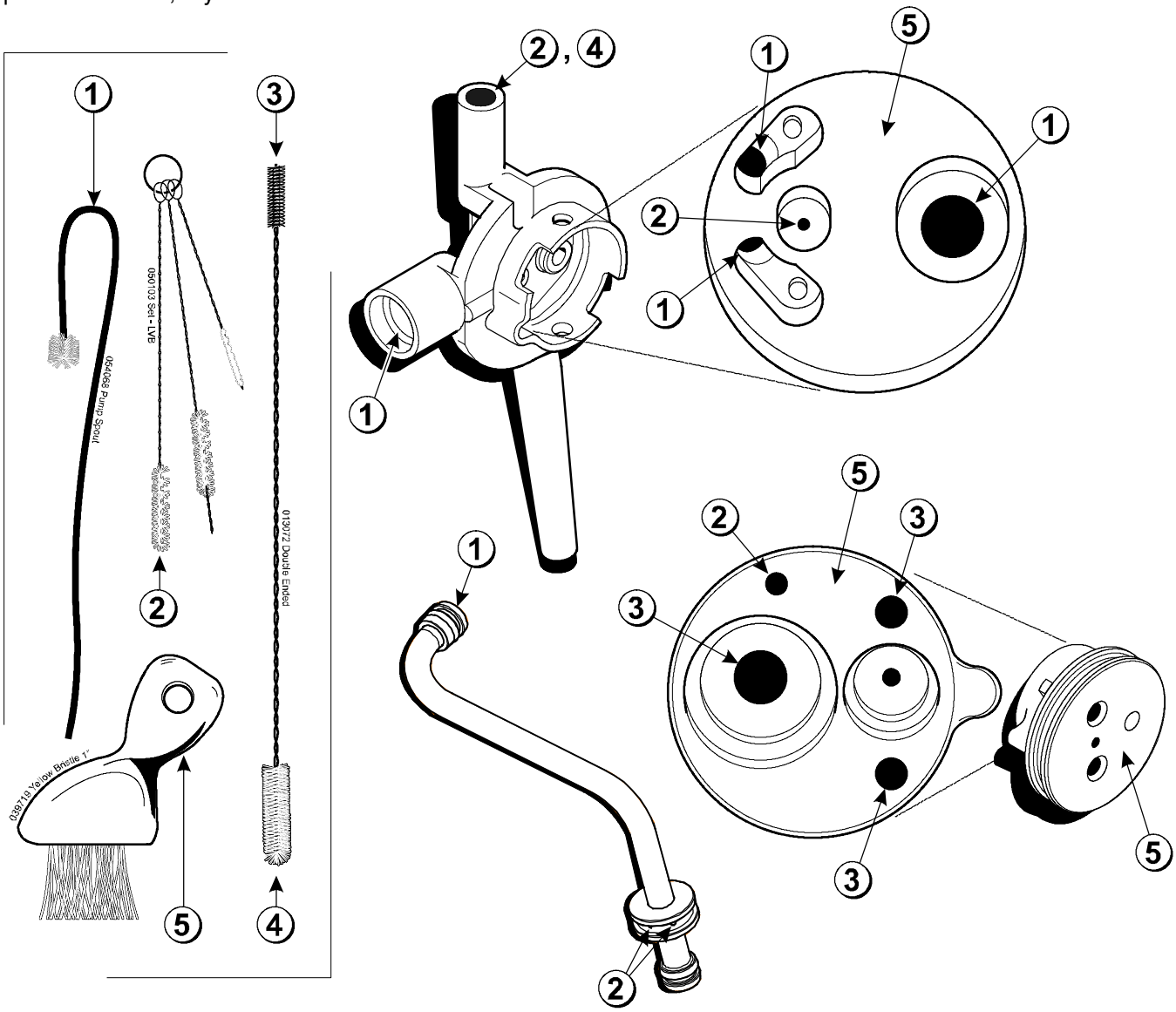

ITEM	DESCRIPTION
1	WHITE BRISTLE - 1/2" x 1/2"
2	WHITE BRISTLE - 3/16" x 1"
3	BLACK BRISTLE - 1/4" x 1- 1/4"

ITEM	DESCRIPTION
4	WHITE BRISTLE - 1/2" x 1"
5	WHITE BRISTLE - 3" x 1/2"

Section 7 Important: Operator Checklist

During Cleaning and Sanitizing

Cleaning and sanitizing schedules are governed by federal, state, or local regulatory agencies, and must be followed accordingly. If the unit has a "Standby mode", it must not be used in lieu of proper cleaning and sanitizing procedures and frequencies set forth by the ruling health authority. The following check points should be stressed during the cleaning and sanitizing operations.

CLEANING AND SANITIZING MUST BE PERFORMED DAILY.

ALWAYS FOLLOW LOCAL HEALTH CODES.

Troubleshooting Bacterial Count

☐ 1. Thoroughly clean and sanitize machine regularly, including complete disassembly and brush cleaning.

☐ 2. Use all brushes supplied for thorough cleaning. The brushes are specially designed to reach all mix passageways.

☐ 3. Use the white bristle brush to clean the mix inlet hole which extends from the mix hopper down to the rear of the freezing cylinder.

☐ 4. Use the black bristle brush to thoroughly clean the rear shell bearing located at the rear of the freezing cylinder. Be sure to have a generous amount of cleaning solution on the brush.

☐ 5. IF LOCAL HEALTH CODES PERMIT THE USE OF RERUN, make sure the mix rerun is stored in an NSF approved, sanitized, covered stainless steel container and used the following day. **DO NOT prime the machine with rerun.** When using rerun, skim off the foam and discard. Mix the rerun with fresh mix in a ratio of 50/50 during the days operation.

☐ 6. On a designated day of the week, run the mix as low as feasible and discard it after closing. This will break the rerun cycle and reduce the possibility of high bacteria and coliform counts.

☐ 7. Properly prepare the cleaning and sanitizing solutions. Read and follow label directions carefully. Too strong of a solution may damage the parts and too weak of a solution will not do an adequate job of cleaning or sanitizing.

☐ 8. The temperature of the mix in the mix hopper and walk-in cooler should be below 40°F. (4.4°C.).

Regular Maintenance Checks

☐ 1. Replace scraper blades that are nicked or damaged. Before installing the beater assembly, be certain that scraper blades are properly attached to the helix.

☐ 2. Check the rear shell bearing for signs of wear (excessive mix leakage in rear drip pan) and be certain it is properly cleaned.

☐ 3. Using a screwdriver and cloth towel, keep the rear shell bearing and the female hex drive socket clean and free of lubricant and mix deposits.

☐ 4. Dispose of o-rings and seals if they are worn, torn, or fit too loosely, and replace with new ones.

☐ 5. Follow all lubricating procedures as outlined in "Assembly".

☐ 6. If your machine is air cooled, check the condensers for accumulation of dirt and lint. Dirty condensers will reduce the efficiency and capacity of the machine. Condensers should be cleaned **monthly** with a soft brush. **Never** use screwdrivers or other metal probes to clean between the fins.
Note: For machines equipped with an air filter, it will be necessary to vacuum clean the filters on a monthly schedule.

Caution: Always disconnect electrical power prior to cleaning the condenser. Failure to follow this instruction may result in electrocution.

☐ 7. If your machine is equipped with an auxiliary refrigeration system, check the auxiliary condenser for accumulation of dirt and lint. Dirty condensers will reduce the refrigeration capacity of the mix hopper. Condensers must be cleaned **monthly** with a soft brush. **Never** use screwdrivers or other metal probes to clean between the fins.

Caution: Always disconnect electrical power prior to cleaning the condenser. Failure to follow this instruction may result in electrocution.

☐ 8. If your machine is water cooled, check the water lines for kinks or leaks. Kinks can occur when the machine is moved back and forth for cleaning or maintenance purposes. Deteriorated or cracked water lines should be replaced only by an authorized Taylor distributor.

The Air/Mix Pump Checklist

☐ 1. Dispose of o- rings and valve gaskets if they are worn, torn or fit too loosely. Replace them with new ones.

☐ 2. Handle plastic pump parts with care to avoid nicks and cracks.

☐ 3. Be sure the air/mix pump is properly attached to the drive hub, or severe and costly damage may occur.

Winter Storage

If the place of business is to be closed during the winter months, it is important to protect the freezer by following certain precautions, particularly if the building is subject to freezing conditions.

Disconnect the freezer from the main power source to prevent possible electrical damage.

On water cooled freezers, disconnect the water supply. Relieve pressure on the spring in the water valve. Use air pressure on the outlet side to blow out any water remaining in the condenser. **This is extremely important.** Failure to follow this procedure may cause severe and costly damage to the refrigeration system.

Your local Taylor Distributor can perform this winter storage service for you.

Wrap detachable parts of the freezer such as beater, blades, drive shaft, and freezer door, and place them in a protected dry place. Rubber trim parts and gaskets can be protected by wrapping them with moisture- proof paper. All parts should be thoroughly cleaned of dried mix or lubrication which attract mice and other vermin.

Section 8 Troubleshooting Guide

PROBLEM	PROBABLE CAUSE	REMEDY	PAGE REF.
1. No product is being dispensed with draw valve open and the machine in the AUTO mode.	a. Freeze- up in mix inlet hole.	a. Call service technician to adjust the mix hopper temperature.	- - -
	b. Beater motor out on reset.	b. Reset the freezer.	13
	c. The beater is rotating counterclockwise from the operator end.	c. Contact service technician to correct rotation to clockwise from operator end.	- - -
	d. The circuit breaker is off or the fuse is blown.	d. Turn the breaker on, or replace the fuse.	- - -
	e. There is inadequate mix in the mix hopper.	e. Fill the mix hopper with mix.	24
2. The product is too stiff.	a. The viscosity needs adjustment.	a. Contact service technician.	- - -
3. The product is too soft.	a. Viscosity needs adjustment.	a. Contact service technician.	- - -
	b. Not enough air space around unit. (Air cooled units)	b. Allow for adequate air flow across the condenser.	6
	c. Worn scraper blades.	c. Replace regularly.	35
	d. Dirty condenser (A/C)	d. Clean monthly.	29
	e. Mix is out of date.	e. Use only fresh mix.	- - -
	f. Loss of water. (W/C)	f. Locate cause of water loss and correct.	29
4. The mix in the mix hopper is too cold.	a. The temperature is out of adjustment.	a. Call service technician to adjust the mix hopper temperature.	- - -

PROBLEM	PROBABLE CAUSE	REMEDY	PAGE REF.
5. The mix in the mix hopper is too warm.	a. The temperature is out of adjustment.	a. Call service technician to adjust the mix hopper temperature.	- - -
	b. The mix hopper cover is not in position.	b. Place the cover in position.	24
	c. The MIX REF light is not lit.	c. Press the MIX REF key.	12
6. The drive shaft is stuck in the drive coupling.	a. Rounded corners of drive shaft, coupling, or both.	a. Call service technician to correct cause, and to replace the necessary components. Do not lubricate the hex end of the drive shaft.	- - -
	b. Mix and lubricant collected in the drive coupling.	b. Brush clean the rear shell bearing area regularly.	26
7. The freezing cylinder walls are scored.	a. The scraper blades and/or blade clips are damaged.	a. Replace the scraper blades and/or clips.	16
	b. Unit was placed in AUTO before all sanitizing solution was removed from freezing cylinder.	b. Place unit in AUTO **only** after priming is complete and all sanitizing solution is removed.	23
	c. The front bearing is missing or worn on the freezer door.	c. Install or replace the front bearing.	17
	d. The beater assembly is bent.	d. Call service technician to repair or replace the beater and to correct the cause of insufficient mix in the freezing cylinder.	
8. Excessive mix leakage into the rear drip pan.	a. Missing or worn drive shaft seal on drive shaft.	a. Install or replace regularly.	15 / 34
	b. The rear shell bearing is worn.	b. Call service technician to replace rear shell bearing.	- - -
9. Excessive mix leakage from door spout.	a. Missing or worn draw valve o- rings.	a. Install or replace regularly.	17 / 34
	b. Inadequate lubrication of draw valve o- rings.	b. Lubricate properly.	17
	c. Wrong type of lubricant is being used (example: petroleum base lubricant).	c. Use the proper lubricant (example: Taylor Lube).	15

PROBLEM	PROBABLE CAUSE	REMEDY	PAGE REF.
10. No freezer operation after pressing the AUTO key.	a. Unit is unplugged.	a. Plug into wall receptacle.	- - -
	b. The circuit breaker is off or the fuse is blown.	b. Turn the breaker on, or replace the fuse.	- - -
	c. The beater motor is out on reset.	c. Reset the freezer.	13
11. Product is not feeding into the freezing cylinder.	a. Inadequate level of mix in the mix hopper.	a. Fill the mix hopper with mix.	24
	b. The mix inlet hole is frozen up.	b. The mix hopper temperature needs adjustment. Call service technician.	- - -
12. The air/mix pump will not operate when the PUMP key is pressed.	a. The circuit breaker is off.	a. Check the breaker.	- - -
	b. The power cord is unplugged.	b. Plug in the power cord.	- - -
	c. The freezer is out on reset.	c. Reset the freezer.	13
	d. The pump motor is out on reset.	d. Press the PUMP key to cancel pump operation. Press the reset button on the side of the pump motor reducer. Press the PUMP key to continue pump operation.	- - -
13. The air/mix pump will not operate when the draw valve is opened and the unit is in the AUTO mode.	a. The pump motor is out on reset.	a. Press the AUTO key to cancel the pump operation. Press the reset button on the side of the pump motor reducer. Press the AUTO key to continue automatic operation.	- - -
	b. The relay is malfunctioning.	b. Contact service technician.	- - -

PROBLEM	PROBABLE CAUSE	REMEDY	PAGE REF.
14. The piston travels back and forth, but product is not being pumped.	a. Inspect the pump valve gasket.	a. The pump valve gasket must be installed correctly, fit tightly, and not have any holes or lubrication.	- - -
	b. Inspect the o- rings.	b. O- rings must not be worn, torn, or fit too loosely.	28
	c. Check the pump cylinder.	c. The piston must be assembled correctly and fit snugly in the pump cylinder.	19
15. Excessive pump cylinder wear.	a. Inadequate or incorrect lubrication of pump cylinder.	a. Follow lubrication procedures carefully.	19
	b. Incorrect ball crank rotation.	b. Contact service technician.	- - -
16. Pitting occurring inside the pump cylinder.	a. Cleaner was left inside the pump cylinder.	a. After brush cleaning the pump cylinder, allow it to air dry. Follow disassembly procedures carefully.	26
17. The ball crank of the motor reducer is broken.	a. Incorrect rotation of pump motor.	a. Contact service technician.	- - -
18. Too much pressure in the freezing cylinder.	a. Plugged relief hole in the inlet tube.	a. Clean.	- - -
19. Not enough pressure in the freezing cylinder.	a. Malfunctioning draw switch.	a. Contact service technician.	- - -

Section 9 Parts Replacement Schedule

PART DESCRIPTION	EVERY 3 MONTHS	EVERY 6 MONTHS	ANNUALLY
Drive Shaft Seal	X		
Scraper Blade	X		
Freezer Door Gasket	X		
Front Bearing	X		
Beater Shoes	X		
Draw Valve O- Ring	X		
Prime Plug O- Ring	X		
Feed Tube O- Ring	X		
Air Orifice O- Ring	X		
White Bristle Brush, 3” x 7”		Inspect & Replace if Necessary	Minimum
White Bristle Brush, 1” x 2”		Inspect & Replace if Necessary	Minimum
Black Bristle Brush, 1” x 2”		Inspect & Replace if Necessary	Minimum
Double- Ended Brush		Inspect & Replace if Necessary	Minimum
White Bristle Brush, 1/2” x 1/2”		Inspect & Replace if Necessary	Minimum
White Bristle Brush, 3/16” x 1”		Inspect & Replace if Necessary	Minimum
White Bristle Brush, 3” x 1/2”		Inspect & Replace if Necessary	Minimum

Section 10 Limited Warranty on Equipment

TAYLOR COMPANY LIMITED WARRANTY ON FREEZERS

Taylor Company, a division of Carrier Commercial Refrigeration, Inc. (“Taylor”) is pleased to provide this limited warranty on new Taylor-branded freezer equipment available from Taylor to the market generally (the “Product”) to the original purchaser only.

LIMITED WARRANTY

Taylor warrants the Product against failure due to defect in materials or workmanship under normal use and service as follows. All warranty periods begin on the date of original Product installation. If a part fails due to defect during the applicable warranty period, Taylor, through an authorized Taylor distributor or service agency, will provide a new or re- manufactured part, at Taylor’s option, to replace the failed defective part at no charge for the part. Except as otherwise stated herein, these are Taylor’s exclusive obligations under this limited warranty for a Product failure. This limited warranty is subject to all provisions, conditions, limitations and exclusions listed below and on the reverse (if any) of this document.

Product	Part	Limited Warranty Period
Soft Serve	Insulated shell assembly	Five (5) years
Frozen Yogurt **Shakes**	Refrigeration compressor (except service valve)	Five (5) years
Smoothies	Beater motors	Two (2) years
Frozen Beverage	Beater drive gear	Two (2) years
Batch Desserts	Printed circuit boards and Softech controls beginning with serial number H8024200	Two (2) years
	Parts not otherwise listed in this table or excluded below	One (1) year

LIMITED WARRANTY CONDITIONS

1. If the date of original installation of the Product cannot be verified, then the limited warranty period begins ninety (90) days from the date of Product manufacture (as indicated by the Product serial number). Proof of purchase may be required at time of service.
2. This limited warranty is valid only if the Product is installed and all required service work on the Product is performed by an authorized Taylor distributor or service agency, and only if genuine, new Taylor parts are used.
3. Installation, use, care, and maintenance must be normal and in accordance with all instructions contained in the Taylor Operator’s Manual.
4. Defective parts must be returned to the authorized Taylor distributor or service agency for credit.
5. The use of any refrigerant other than that specified on the Product’s data label will void this limited warranty.

LIMITED WARRANTY EXCEPTIONS

This limited warranty does **not** cover:

1. Labor or other costs incurred for diagnosing, repairing, removing, installing, shipping, servicing or handling of defective parts, replacement parts, or new Products.
2. Normal maintenance, cleaning and lubrication as outlined in the Taylor Operator’s Manual, including cleaning of condensers.

131122

3. Replacement of wear items designated as Class “000” parts in the Taylor Operator’s Manual.
4. External hoses, electrical power supplies, and machine grounding.
5. Parts not supplied or designated by Taylor, or damages resulting from their use.
6. Return trips or waiting time required because a service technician is prevented from beginning warranty service work promptly upon arrival.
7. Failure, damage or repairs due to faulty installation, misapplication, abuse, no or improper servicing, unauthorized alteration or improper operation or use as indicated in the Taylor Operator’s Manual, including but not limited to the failure to use proper assembly and cleaning techniques, tools, or approved cleaning supplies.
8. Failure, damage or repairs due to theft, vandalism, wind, rain, flood, high water, water, lightning, earthquake or any other natural disaster, fire, corrosive environments, insect or rodent infestation, or other casualty, accident or condition beyond the reasonable control of Taylor; operation above or below the electrical or water supply specification of the Product; or components repaired or altered in any way so as, in the judgment of the Manufacturer, to adversely affect performance, or normal wear or deterioration.
9. Any Product purchased over the Internet.
10. Failure to start due to voltage conditions, blown fuses, open circuit breakers, or damages due to the inadequacy or interruption of electrical service.
11. Electricity or fuel costs, or increases in electricity or fuel costs from any reason whatsoever.
12. Damages resulting from the use of any refrigerant other than that specified on the Product’s data label will void this limited warranty.
13. Any cost to replace, refill or dispose of refrigerant, including the cost of refrigerant.
14. **ANY SPECIAL, INDIRECT OR CONSEQUENTIAL PROPERTY OR COMMERCIAL DAMAGE OF ANY NATURE WHATSOEVER.** Some jurisdictions do not allow the exclusion of incidental or consequential damages, so this limitation may not apply to you.

This limited warranty gives you specific legal rights, and you may also have other rights which vary from jurisdiction to jurisdiction.

LIMITATION OF WARRANTY

THIS LIMITED WARRANTY IS EXCLUSIVE AND IS IN LIEU OF ALL OTHER WARRANTIES, CONDITIONS AND/OR REMEDIES UNDER THE LAW, INCLUDING ANY IMPLIED WARRANTIES OR CONDITIONS OF MERCHANTABILITY OR FITNESS FOR A PARTICULAR PURPOSE. THE ORIGINAL OWNER’S SOLE REMEDY WITH RESPECT TO ANY PRODUCTS SHALL BE REPAIR OR REPLACEMENT OF DEFECTIVE COMPONENTS UNDER THE TERMS OF THIS LIMITED WARRANTY. ALL RIGHTS TO CONSEQUENTIAL OR INCIDENTAL DAMAGES (INCLUDING CLAIMS FOR LOST SALES, LOST PROFITS, PRODUCT LOSS, PROPERTY DAMAGES OR SERVICE EXPENSES) ARE EXPRESSLY EXCLUDED. THE EXPRESS WARRANTIES MADE IN THIS LIMITED WARRANTY MAY NOT BE ALTERED, ENLARGED, OR CHANGED BY ANY DISTRIBUTOR, DEALER, OR OTHER PERSON, WHATSOEVER.

LEGAL REMEDIES

The owner **must** notify Taylor in writing, by certified or registered letter to the following address, of any defect or complaint with the Product, stating the defect or complaint and a specific request for repair, replacement, or other correction of the Product under warranty, mailed at least thirty (30) days before pursuing any legal rights or remedies.

Taylor Company
a division of Carrier Commercial Refrigeration, Inc.
750 N. Blackhawk Blvd.
Rockton, IL 61072, U.S.A.

Section 11 Limited Warranty on Parts

TAYLOR COMPANY LIMITED WARRANTY ON TAYLOR GENUINE PARTS

Taylor Company, a division of Carrier Commercial Refrigeration, Inc. ("Taylor") is pleased to provide this limited warranty on new Taylor genuine replacement components and parts available from Taylor to the market generally (the "Parts") to the original purchaser only.

LIMITED WARRANTY

Taylor warrants the Parts against failure due to defect in materials or workmanship under normal use and service as follows. All warranty periods begin on the date of original installation of the Part in the Taylor unit. If a Part fails due to defect during the applicable warranty period, Taylor, through an authorized Taylor distributor or service agency, will provide a new or re- manufactured Part, at Taylor's option, to replace the failed defective Part at no charge for the Part. Except as otherwise stated herein, these are Taylor's exclusive obligations under this limited warranty for a Part failure. This limited warranty is subject to all provisions, conditions, limitations and exclusions listed below and on the reverse (if any) of this document.

Part's Warranty Class Code or Part	Limited Warranty Period
Class 103 Parts[1]	Three (3) months
Class 212 Parts[2]	Twelve (12) months
Class 512 Parts	Twelve (12) months
Class 000 Parts	No warranty
Taylor Part #072454 (Motor- 24VDC *C832/C842*)	Four (4) years

LIMITED WARRANTY CONDITIONS

1. If the date of original installation of the Part cannot be otherwise verified, proof of purchase may be required at time of service.
2. This limited warranty is valid only if the Part is installed and all required service work in connection with the Part is performed by an authorized Taylor distributor or service agency.
3. The limited warranty applies only to Parts remaining in use by their original owner at their original installation location in the unit of original installation.
4. Installation, use, care, and maintenance must be normal and in accordance with all instructions contained in the Taylor Operator's Manual.
5. Defective Parts must be returned to the authorized Taylor distributor or service agency for credit.
6. This warranty is not intended to shorten the length of any warranty coverage provided pursuant to a separate Taylor Limited Warranty on freezer or grill equipment.
7. The use of any refrigerant other than that specified for the unit in which the Part is installed will void this limited warranty.

[1, 2] Except that Taylor Part #032129SER2 (Compressor-Air-230V SERV) and Taylor Part #075506SER1 (Compressor-Air-115V 60HZ) shall have a limited warranty period of twelve (12) months when used in Taylor freezer equipment and a limited warranty period of two (2) years when used in Taylor grill equipment.

131122

LIMITED WARRANTY EXCEPTIONS

This limited warranty does **not** cover:

1. Labor or other costs incurred for diagnosing, repairing, removing, installing, shipping, servicing or handling of defective Parts, replacement Parts, or new Parts.
2. Normal maintenance, cleaning and lubrication as outlined in the Taylor Operator's Manual, including cleaning of condensers or carbon and grease buildup.
3. Required service, whether cleaning or general repairs, to return the cooking surface assemblies, including the upper platen and lower plate, to an operational condition to achieve proper cooking or allow proper assembly of release sheets and clips as a result of grease build-up on the cooking surfaces, including but not limited to the platen and plate, sides of the shroud or top of the shroud.
4. Replacement of cooking surfaces, including the upper platen and lower plate, due to pitting or corrosion (or in the case of the upper platen, due to loss of plating) as a result of damage due to the impact of spatulas or other small wares used during the cooking process or as a result of the use of cleaners, cleaning materials or cleaning processes not approved for use by Taylor.
5. Replacement of wear items designated as Class "000" Parts in the Taylor Operator's Manual, as well as any release sheets and clips for the Product's upper platen assembly.
6. External hoses, electrical power supplies, and machine grounding.
7. Parts not supplied or designated by Taylor, or damages resulting from their use.
8. Return trips or waiting time required because a service technician is prevented from beginning warranty service work promptly upon arrival.
9. Failure, damage or repairs due to faulty installation, misapplication, abuse, no or improper servicing, unauthorized alteration or improper operation or use as indicated in the Taylor Operator's Manual, including but not limited to the failure to use proper assembly and cleaning techniques, tools, or approved cleaning supplies.
10. Failure, damage or repairs due to theft, vandalism, wind, rain, flood, high water, water, lightning, earthquake or any other natural disaster, fire, corrosive environments, insect or rodent infestation, or other casualty, accident or condition beyond the reasonable control of Taylor; operation above or below the gas, electrical or water supply specification of the unit in which a part is installed; or Parts or the units in which they are installed repaired or altered in any way so as, in the judgment of Taylor, to adversely affect performance, or normal wear or deterioration.
11. Any Part purchased over the Internet.
12. Failure to start due to voltage conditions, blown fuses, open circuit breakers, or damages due to the inadequacy or interruption of electrical service.
13. Electricity, gas or other fuel costs, or increases in electricity or fuel costs from any reason whatsoever.
14. Damages resulting from the use of any refrigerant other than that specified for the unit in which the Part is installed will void this limited warranty.
15. Any cost to replace, refill or dispose of refrigerant, including the cost of refrigerant.
16. **ANY SPECIAL, INDIRECT OR CONSEQUENTIAL PROPERTY OR COMMERCIAL DAMAGE OF ANY NATURE WHATSOEVER.** Some jurisdictions do not allow the exclusion of incidental or consequential damages, so this limitation may not apply to you.

This limited warranty gives you specific legal rights, and you may also have other rights which vary from jurisdiction to jurisdiction.

LIMITATION OF WARRANTY

THIS LIMITED WARRANTY IS EXCLUSIVE AND IS IN LIEU OF ALL OTHER WARRANTIES, CONDITIONS AND/OR REMEDIES UNDER THE LAW, INCLUDING ANY IMPLIED WARRANTIES OR CONDITIONS OF MERCHANTABILITY OR FITNESS FOR A PARTICULAR PURPOSE. THE ORIGINAL OWNER'S SOLE REMEDY WITH RESPECT TO ANY PRODUCTS SHALL BE REPAIR OR REPLACEMENT OF DEFECTIVE PARTS UNDER THE TERMS OF THIS LIMITED WARRANTY. ALL RIGHTS TO CONSEQUENTIAL OR INCIDENTAL DAMAGES (INCLUDING CLAIMS FOR LOST SALES, LOST PROFITS, PRODUCT LOSS, PROPERTY DAMAGES OR SERVICE EXPENSES) ARE EXPRESSLY EXCLUDED. THE EXPRESS WARRANTIES MADE IN THIS LIMITED WARRANTY MAY NOT BE ALTERED, ENLARGED, OR CHANGED BY ANY DISTRIBUTOR, DEALER, OR OTHER PERSON, WHATSOEVER.

LEGAL REMEDIES

The owner **must** notify Taylor in writing, by certified or registered letter to the following address, of any defect or complaint with the Part, stating the defect or complaint and a specific request for repair, replacement, or other correction of the Part under warranty, mailed at least thirty (30) days before pursuing any legal rights or remedies.

Taylor Company
a division of Carrier Commercial Refrigeration, Inc.
750 N. Blackhawk Blvd.
Rockton, IL 61072, U.S.A.