TAYLOR®

Item No. _____

C713

CROWN® SERIES

TOTALLY DIFFERENT.

C713

Soft Serve Freezer

Twin Twist

Integrated Syrup Rail Option - 2 room temperature with lids & ladles, 2 heated with syrup pumps

NSF Standard 6 | c UL us LISTED SA2650 | CE Selected 50 Hz. Models

Features

Offer all the popular soft serve variations from low or non-fat ice creams to custards, yogurt and sorbet. Serve two separate soft serve flavors, or an equal combination of both in a twist.

Freezing Cylinder

Two, 3.4 quart (3.2 liter).

Mix Hopper

Two, 20 quart (18.9 liter). Separate hopper refrigeration (SHR) maintains mix below 41ºF (5ºC) during Auto and Standby modes.

Indicator Lights

Digital readout displays hours since last brush cleaning to assure product safety. Mix Low light alerts operator to add mix. Audible alarm may be enabled to sound when mix is low. When the Mix Out light flashes, the unit shuts down automatically to prevent damage.

Touch Screen Controls

Microprocessor touch controls are embedded in durable tempered glass panel. Multiple languages are selectable. Viscosity is continually measured to dispense consistent quality soft serve desserts. Temperatures in the hoppers or freezing cylinders may be displayed at any point of operation, in either Fahrenheit or Celsius. Draw counter allows operator to view number of servings dispensed.

Standby

During long no-use periods, the standby feature maintains safe product temperatures in the mix hopper and freezing cylinder.

Two Locking Casters

Front casters have a locking feature for operators to keep equipment in place. The lock can be released to move the equipment for cleaning

Door Interlock System

Protects the operator from injury as the beater will not operate without the dispensing door in place.

Freezer Door

A specially designed thermo-plastic door allows quick ejection of product with a simple movement of the draw handle. Self closing draw handles are standard.

Rockton, Illinois 61072
800-255-0626
Phone 815-624-8333 Fax 815-624-8000
www.taylor-company.com
e-mail: info@taylor-company.com

International Office
Taylor Company S.r.l.
Roma, Italy
Tel: **+39-06-420-12002** Fax: +39-06-420-12034
e-mail: romeoff@taylor-company.com

ISO 9001:2000 Registered Firm

C713 Soft Serve Freezer

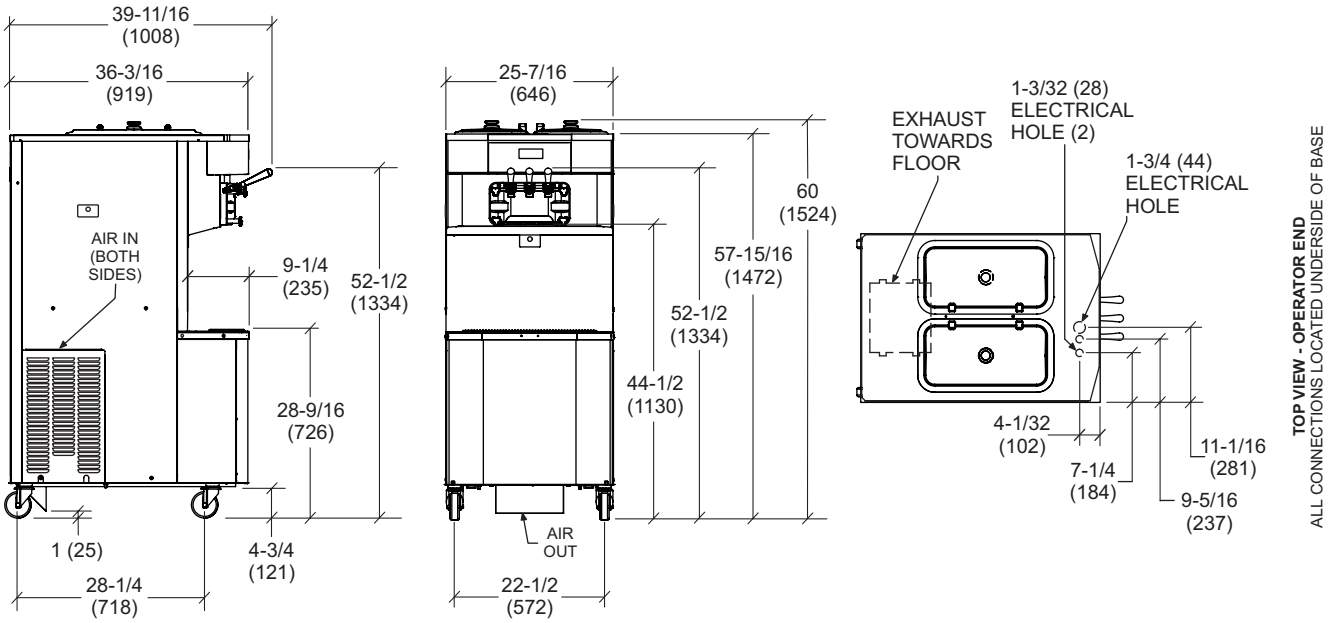

NOTE: FIGURES IN PARENTHESES INDICATE MILLIMETERS

Weights	lbs.	kgs.
Net	733	332.5
Crated	810	367.4
	cu. ft.	**cu. m.**
Volume	69.3	1.96

Dimensions	in.	mm.
Width	25-7/16	646
Depth	36-3/16	919
Height	60	1524
Floor Clearance	4-3/4	121

**Mounted on standard casters*

Electrical	Maximum Fuse Size		Minimum Circuit Ampacity		Poles (P) Wires (W)
	Left	Right	Left	Right	
208-230/60/1 Air	35	35	25	23	2P 3W
208-230/60/1 Water	35	35	25	23	2P 3W
208-230/60/3 Air	20	20	17	15	3P 4W
208-230/60/3 Air, Syrup	25	20	19	15	3P 4W
208-230/60/3 Water	20	20	17	15	3P 4W
220-240/50/1 Air	25	25	21	19	2P 3W
380-415/50/3N~ Air	12	10	9	8	4P 5W

This unit may be manufactured in other electrical characteristics. Refer to the local Taylor Distributor for availability.

(For exact electrical information, always refer to the data label of the unit.)

Bidding Specs

Electrical: Volt _____ Hz_____ ph _____

Neutral: ☐Yes ☐No | **Cooling**: ☐Air ☐Water ☐NA

Options:_____

Specifications

Electrical

Two dedicated electrical connections are required. See the Electrical chart for the proper electrical requirements. Manufactured to be permanently connected. Consult your local Taylor distributor for cord & receptacle specifications as local codes allow.

Beater Motor

Two, 1.5 HP.

Refrigeration System

Two, 9,500 BTU/hr. R404A.
Separate Hopper Refrigeration (SHR), One, 400 BTU/hr. R134a.
(BTUs may vary depending on compressor used.)

Air Cooled

Minimum 3" (76 mm) around all sides. Install the deflector provided to prevent recirculation of warm air. Minimum air clearances must be met to assure adequate air flow for optimum performance.

Water Cooled

Water inlet and drain connections under side of base 1/2" FPT.

Options

- Cone Dispenser
- Drain Adaptor (for ease of rinsing & cleaning)
- Draw Valve Lock Kit
- Faucet
- Hopper Locks
- Hopper Agitators
- Panel Spinner
- Syrup Rail (Integrated)
- Syrup Rail Kit (side mount)

Continuing research results in steady improvements; therefore, these specifications are subject to change without notice.

TAYLOR®

Taylor Company,
Rockton, Illinois 61072
815-624-8333 **800-255-0626** Fax 815-624-8000
www.taylor-company.com