OPERATOR'S
MANUAL

Model C713
Soft Serve Freezer

Original Operating Instructions

062180-M

2/11/05 (Original Publication)
(Updated 11/21/13)

Complete this page for quick reference when service is required:

Taylor Distributor: _____

Address: _____

Phone: _____

Service: _____

Parts: _____

Date of Installation: _____

Information found on the data label:

Model Number: _____

Serial Number: _____

Electrical Specs: Voltage _____ Cycle _____

Phase _____

Maximum Fuse Size: _____ A

Minimum Wire Ampacity: _____ A

© 2005 Carrier Commercial Refrigeration, Inc.
062180- M
Any unauthorized reproduction, disclosure, or distribution of copies by any person of any portion of this work may be a violation of Copyright Law of the United States of America and other countries, could result in the awarding of Statutory Damages of up to $250,000 (17 USC 504) for infringement, and may result in further civil and criminal penalties. All rights reserved.

Taylor Company
a division of Carrier Commercial Refrigeration, Inc.
750 N. Blackhawk Blvd.
Rockton, IL 61072

Table of Contents

Section 1 To the Installer 1

Installer Safety 1

Site Preparation 1

Air Cooled Units 1

Water Connections (Water Cooled Units Only) 2

Electrical Connections 2

Beater Rotation 3

Refrigerant 3

Section 2 To the Operator 4

Section 3 Safety 5

Section 4 Operator Parts Identification 8

Model C713 8

Model C713 Door and Beater Assembly 10

Accessories 11

Brushes 12

Section 5 Important: To the Operator 13

Symbol Definitions 14

Operating Screen Descriptions 16

Manager's Menu 17

Section 6 Operating Procedures 22

Freezing Cylinder Assembly 22

Sanitizing 27

Priming 28

Manual Brush Cleaning 29

Draining Product From The Freezing Cylinder 29

Rinsing 29
Hopper Cleaning 30
Disassembly 30
Brush Cleaning 31
Section 7 Important: Operator Checklist 32
During Cleaning and Sanitizing 32
Troubleshooting Bacterial Count 32
Regular Maintenance Checks 32
Winter Storage 33
Section 8 Troubleshooting Guide 34
Section 9 Parts Replacement Schedule 37
Section 10 Limited Warranty on Equipment 38
Section 11 Limited Warranty on Parts 40
Section 12 Parts List 43
Wiring Diagrams 51

Note: Continuing research results in steady improvements; therefore, information in this manual is subject to change without notice.

Note: Only instructions originating from the factory or its authorized translation representative(s) are considered to be the original set of instructions.

© 2005 Carrier Commercial Refrigeration, Inc. (Original Publication)
(Updated November, 2013)
062180- M
Any unauthorized reproduction, disclosure, or distribution of copies by any person of any portion of this work may be a violation of Copyright Law of the United States of America and other countries, could result in the awarding of Statutory Damages of up to $250,000 (17 USC 504) for infringement, and may result in further civil and criminal penalties. All rights reserved.

Taylor Company
a division of Carrier Commercial Refrigeration, Inc.
750 N. Blackhawk Blvd.
Rockton, IL 61072

Section 1 To the Installer

The following information has been included in the manual as safety and regulatory guidelines. For complete installation instructions, please see the Installation Checklist.

Installer Safety

In all areas of the world, equipment should be installed in accordance with existing local codes. Please contact your local authorities if you have any questions.

Care should be taken to ensure that all basic safety practices are followed during the installation and servicing activities related to the installation and service of Taylor equipment.

- Only authorized Taylor service personnel should perform installation and repairs on the equipment.
- Authorized service personnel should consult OSHA Standard 29CFRI910.147 or the applicable code of the local area for the industry standards on lockout/tagout procedures before beginning any installation or repairs.
- Authorized service personnel must ensure that the proper PPE is available and worn when required during installation and service.
- Authorized service personnel must remove all metal jewelry, rings, and watches before working on electrical equipment.

The main power supply(s) to the freezer must be disconnected prior to performing any repairs. Failure to follow this instruction may result in personal injury or death from electrical shock or hazardous moving parts as well as poor performance or damage to the equipment.

Note: All repairs must be performed by an authorized Taylor Service Technician.

This unit has many sharp edges that can cause severe injuries.

Site Preparation

Review the area the unit is to be installed in before uncrating the unit making sure that all possible hazards the user or equipment may come into have been addressed.

Air Cooled Units

The Model C713 air cooled unit requires a minimum of 3” (76 mm) of clearance on all sides. Install the deflector provided to prevent recirculation of warm air. This will allow for adequate air flow across the condenser. Failure to allow adequate clearance can reduce the refrigeration capacity of the freezer and possibly cause permanent damage to the compressor.

For Indoor Use Only: This unit is designed to operate indoors, under normal ambient temperatures of 70°-75°F (21°-24°C). The freezer has successfully performed in high ambient temperatures of 104°(40°C) at reduced capacities.

This unit must **NOT** be installed in an area where a water jet or hose can be used. **NEVER** use a water jet or hose to rinse or clean the unit. Failure to follow this instruction may result in electrocution.

This unit must be installed on a level surface to avoid the hazard of tipping. Extreme care should be taken in moving this equipment for any reason. Two or more persons are required to safely move this unit. Failure to comply may result in personal injury or equipment damage.

Uncrate the unit and inspect it for damage. Report any damage to your Taylor Distributor.

This piece of equipment is made in the USA and has USA sizes of hardware. All metric conversions are approximate and vary in size.

Water Connections

(Water Cooled Units Only)

An adequate cold water supply must be provided with a hand shut-off valve. On the underside of the base pan or on the right side, two 3/8” I.P.S. water connections for inlet and outlet are provided for easy hook-up. 1/2” inside diameter water lines should be connected to the machine. (Flexible lines are recommended, if local codes permit.) Depending on local water conditions, it may be advisable to install a water strainer to prevent foreign substances from clogging the automatic water valve. There will be only one water “in” and one water “out” connection. DO NOT install a hand shut-off valve on the water “out” line! Water should always flow in this order: first, through the automatic water valve; second, through the condenser; and third, through the outlet fitting to an **open trap drain.**

A back flow prevention device is required on the incoming water connection side. Please refer to the applicable National, State, and local codes for determining the proper configuration.

Electrical Connections

In the United States, this equipment is intended to be installed in accordance with the National Electrical Code (NEC), ANSI/NFPA 70-1987. The purpose of the NEC code is the practical safeguarding of persons and property from hazards arising from the use of electricity. This code contains provisions considered necessary for safety. In all other areas of the world, equipment should be installed in accordance with the existing local codes. Please contact your local authorities.

FOLLOW YOUR LOCAL ELECTRICAL CODES!

Each unit requires one power supply for each data label on the unit. Check the data label(s) on the freezer for branch circuit overcurrent protection or fuse, circuit ampacity, and other electrical specifications. Refer to the wiring diagram provided inside of the electrical box for proper power connections.

CAUTION: THIS EQUIPMENT MUST BE PROPERLY GROUNDED! FAILURE TO DO SO CAN RESULT IN SEVERE PERSONAL INJURY FROM ELECTRICAL SHOCK!

DO NOT operate this freezer with larger fuses than specified on the unit data label. Failure to follow this instruction may result in electrocution or damage to the machine.

This unit is provided with an equipotential grounding lug that is to be properly attached to the rear of the frame by the authorized installer. The installation location is marked by the equipotential bonding symbol (5021 of IEC 60417-1) on both the removable panel and the equipments frame.

Stationary appliances which are not equipped with a power cord and a plug or another device to disconnect the appliance from the power source must have an all-pole disconnecting device with a contact gap of at least 3mm installed in the external installation.

Appliances that are permanently connected to fixed wiring and for which leakage currents may exceed 10 mA, particularly when disconnected or not used for long periods, or during initial installation, shall have protective devices such as a GFI, to protect against the leakage of current, installed by the authorized personnel to the local codes.

Supply cords used with this unit shall be oil-resistant, sheathed flexible cable not lighter than ordinary polychloroprene or other equivalent synthetic elastomer-sheathed cord (Code designation 60245 IEC 57) installed with the proper cord anchorage to relieve conductors from strain, including twisting, at the terminals and protect the insulation of the conductors from abrasion.

If the supply cord is damaged, it must be replaced by the manufacturer, its service agent, or similarly qualified person, in order to avoid a hazard.

Beater Rotation

Beater rotation must be clockwise as viewed looking into the freezing cylinder.

Note: The following procedures should be performed by a trained service technician.

To correct the rotation on a three-phase unit, interchange any two incoming power supply lines at freezer main terminal block only.

To correct rotation on a single-phase unit, change the leads inside the beater motor. (Follow the diagram printed on the motor.)

Electrical connections are made directly to the terminal block provided in the splice box.

Refrigerant

In consideration of our environment, Taylor proudly uses only earth friendly HFC refrigerants. The HFC refrigerant used in this unit is R404A. This refrigerant is generally considered non-toxic and non-flammable, with an Ozone Depleting Potential (ODP) of zero (0).

However, any gas under pressure is potentially hazardous and must be handled with caution. NEVER fill any refrigerant cylinder completely with liquid. Filling the cylinder to approximately 80% will allow for normal expansion.

Use only R404A refrigerant that conforms to the AHRI standard 700 specification. The use of any other refrigerant may expose users and operators to unexpected safety hazards.

Refrigerant liquid sprayed onto the skin may cause serious damage to tissue. Keep eyes and skin protected. If refrigerant burns should occur, flush immediately with cold water. If burns are severe, apply ice packs and contact a physician immediately.

Taylor reminds technicians to be cautious of government laws regarding refrigerant recovery, recycling, and reclaiming systems. If you have any questions regarding these laws, please contact the factory Service Department.

WARNING: R404A refrigerant used in conjunction with polyolester oils is extremely moisture absorbent. When opening a refrigeration system, the maximum time the system is open must not exceed 15 minutes. Cap all open tubing to prevent humid air or water from being absorbed by the oil.

Section 2 To the Operator

Your freezer has been carefully engineered and manufactured to give you dependable operation.

This unit, when properly operated and cared for, will produce a consistent quality product. Like all mechanical products, it will require cleaning and maintenance. A minimum amount of care and attention is necessary if the operating procedures outlined in this manual are followed closely.

This Operator's Manual should be read before operating or performing any maintenance on your equipment.

Your Taylor freezer will NOT eventually compensate for and correct any errors during the set-up or filling operations. Thus, the initial assembly and priming procedures are of extreme importance. It is strongly recommended that personnel responsible for the equipment's operation, both assembly and disassembly, go through these procedures together in order to be properly trained and to make sure that no confusion exists.

In the event you should require technical assistance, please contact your local authorized Taylor Distributor.

Note: Your Taylor warranty is valid only if the parts are authorized Taylor parts, purchased from the local authorized Taylor Distributor, and only if all required service work is provided by an authorized Taylor service technician. Taylor reserves the right to deny warranty claims on units or parts if non-Taylor approved parts or incorrect refrigerant were installed in the unit, system modifications were performed beyond factory recommendations, or it is determined that the failure was caused by abuse, misuse, neglect, or failure to follow all operating instructions. For full details of your Taylor Warranty, please see the Limited Warranty section in this manual.

Note: Constant research results in steady improvements; therefore, information in this manual is subject to change without notice.

If the crossed out wheeled bin symbol is affixed to this product, it signifies that this product is compliant with the EU Directive as well as other similar legislation in effect after August 13, 2005. Therefore, it must be collected separately after its use is completed, and cannot be disposed as unsorted municipal waste.

The user is responsible for returning the product to the appropriate collection facility, as specified by your local code.

For additional information regarding applicable local laws, please contact the municipal facility and/or local distributor.

Compressor Warranty Disclaimer

The refrigeration compressor(s) on this unit are warranted for the term stated in the Limited Warranty section in this manual. However, due to the Montreal Protocol and the U.S. Clean Air Act Amendments of 1990, many new refrigerants are being tested and developed, thus seeking their way into the service industry. Some of these new refrigerants are being advertised as drop-in replacements for numerous applications. It should be noted that in the event of ordinary service to this unit's refrigeration system, **only the refrigerant specified on the affixed data label should be used**. The unauthorized use of alternate refrigerants will void your Taylor compressor warranty. It is the unit owner's responsibility to make this fact known to any technician he employs.

It should also be noted that Taylor does not warrant the refrigerant used in its equipment. For example, if the refrigerant is lost during the course of ordinary service to this machine, Taylor has no obligation to either supply or provide its replacement either at billable or unbillable terms. Taylor does have the obligation to recommend a suitable replacement if the original refrigerant is banned, obsoleted, or no longer available during the five year warranty of the compressor.

Taylor will continue to monitor the industry and test new alternates as they are being developed. Should a new alternate prove, through our testing, that it would be accepted as a drop-in replacement, then the above disclaimer would become null and void. To find out the current status of an alternate refrigerant as it relates to your compressor warranty, call the local Taylor Distributor or the Taylor Factory. Be prepared to provide the Model/Serial Number of the unit in question.

131121

Section 3 Safety

We, at Taylor Company, are concerned about the safety of the operator when he or she comes in contact with the freezer and its parts. Taylor has gone to extreme efforts to design and manufacture built-in safety features to protect both you and the service technician. As an example, warning labels have been attached to the freezer to further point out safety precautions to the operator.

To Operate Safely:

IMPORTANT - Failure to adhere to the following safety precautions may result in severe personal injury or death. Failure to comply with these warnings may damage the machine and its components. Component damage will result in part replacement expense and service repair expense.

DO NOT operate the freezer without reading this Operator Manual. Failure to follow this instruction may result in equipment damage, poor freezer performance, health hazards, or personal injury.

This appliance is to be used only by trained personnel. It is not intended for use by children or people with reduced physical, sensory, or mental capabilities, or lack of experience and knowledge, unless given supervision or instruction concerning the use of the appliance by a person responsible for their safety. Children should be supervised to ensure that they do not play with the appliance.

This unit is provided with an equipotential grounding lug that is to be properly attached to the rear of the frame by the authorized installer. The installation location is marked by the equipotential bonding symbol (5021 of IEC 60417-1) on both the removable panel and the equipments frame.

- **DO NOT** operate the freezer unless it is properly grounded.
- **DO NOT** operate freezer with larger fuses than specified on the data label.
- All repairs must be performed by an authorized Taylor service technician.
- The main power supplies to the machine must be disconnected prior to performing any repairs.
- For Cord Connected Units: Only Taylor authorized service technicians or licensed electricians may install a plug or replacement cord on these units.
- Stationary appliances which are not equipped with a power cord and a plug or another device to disconnect the appliance from the power source must have an all-pole disconnecting device with a contact gap of at least 3 mm installed in the external installation.
- Appliances that are permanently connected to fixed wiring and for which leakage currents may exceed 10 mA, particularly when disconnected or not used for long periods, or during initial installation, shall have protective devices such as a GFI, to protect against the leakage of current, installed by the authorized personnel to the local codes.
- Supply cords used with this unit shall be oil-resistant, sheathed flexible cable not lighter than ordinary polychloroprene or other equivalent synthetic elastomer-sheathed cord (Code designation 60245 IEC 57) installed with the proper cord anchorage to relieve conductors from strain, including twisting, at the terminals and protect the insulation of the conductors from abrasion.
  If the supply cord is damaged, it must be replaced by the manufacturer, its service agent, or similarly qualified person, in order to avoid a hazard.

Failure to follow these instructions may result in electrocution. Contact your local authorized Taylor Distributor for service.

DO NOT use a water jet to clean or rinse the freezer. Failure to follow these instructions may result in serious electrical shock.

- **DO NOT** allow untrained personnel to operate this machine.
- **DO NOT** operate the freezer unless all service panels and access doors are restrained with screws.
- **DO NOT** remove any internal operating parts (examples: freezer door, beater, scraper blades, etc.) unless all control switches are in the OFF position.

Failure to follow these instructions may result in severe personal injury to fingers or hands from hazardous moving parts.

This unit has many sharp edges that can cause severe injuries.

- **DO NOT** put objects or fingers in the door spout. This may contaminate the product and cause severe personal injury from blade contact.
- **USE EXTREME CAUTION** when removing the beater asssembly. The scraper blades are very sharp.
- **CAUTION-SHARP EDGES:** Two people are required to handle the cup/cone dispenser. Protective gloves must be worn and the mounting holes must NOT be used to lift or hold the dispenser. Failure to follow this instruction can result in personal injury to fingers or equipment damage.

Access to the service area of the unit is restricted to persons having knowledge and practical experience with the appliance, in particular as far as safety and hygiene are concerned.

This freezer must be placed on a level surface. Failure to comply may result in personal injury or equipment damage.

Cleaning and sanitizing schedules are governed by your state or local regulatory agencies and must be followed accordingly. Please refer to the cleaning section of this manual for the proper procedure to clean this unit.

This machine is designed to maintain product temperature under 41°F (5°C). Any product being added to this machine must be below 41°F (5°C). Failure to follow this instruction may result in health hazards and poor freezer performance.

DO NOT obstruct air intake and discharge openings:

A minimum of 3” (76 mm) air space is required on all sides. Install the deflector provided to prevent recirculation of warm air. Failure to follow this instruction may cause poor freezer performance and damage to the machine.

For Indoor Use Only: This unit is designed to operate indoors, under normal ambient temperatures of 70° - 75°F (21° - 24°C). The freezer has successfully performed in high ambient temperatures of 104°(40°C) at reduced capacities.

DO NOT run the machine without product. Failure to follow this instruction can result in damage to the machine.

NOISE LEVEL: Airborne noise emission does not exceed 78 dB(A) when measured at a distance of 1.0 meter from the surface of the machine and at a height of 1.6 meters from the floor.

Notes:

Model C713

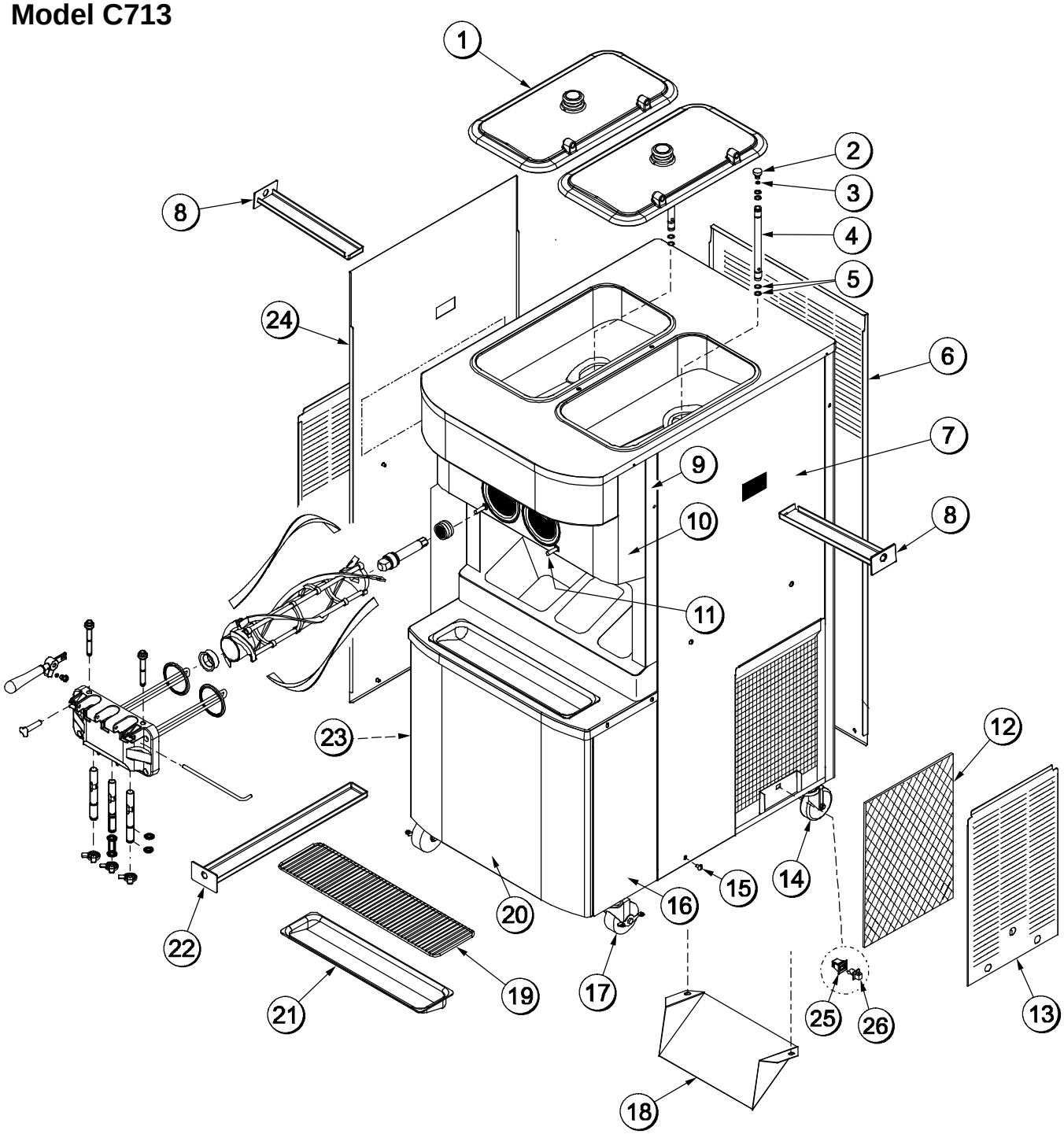

Figure 1

121005

C713 Exploded View Parts Identification

ITEM	DESCRIPTION	PART NO.
1	COVER-HOPPER	053809-1
2	ORIFICE	022465-100
3	O-RING-3/8 OD X ..070 W	016137
4	TUBE A.-FEED-SS 5/32 HOLE	X29429-2
5	O-RING-.643 OD X .077 W	018572
6	PANEL-REAR	059917
7	PANEL-SIDE*RIGHT	059907
8	PAN-DRIP 12.5	059736
9	PANEL A.-FRONT	X63879
10	PANEL A.-FRONT	X59836
11	STUD-NOSE CONE	055987
12	FILTER-AIR-POLY-FLO	052779-11
13	PANEL A.-FILTER-LOUVERED	X59928
14	CASTER-4” SWV 3/4-10 STEM	044106

ITEM	DESCRIPTION	PART NO.
15	SCREW-1/4-20 X 3/8 RHM-SS	011694
16	PANEL-CORNER-FRONT RIGHT	063087
17	CASTER-4” SWV 3/4-10 STEM W/BRAKE	046437
18	DEFLECTOR-BLOWER	047912
19	SHIELD-SPLASH-WIRE-19-3/4 L	033813
20	PANEL A.-FRONT LOWER	X59854-SER
21	TRAY-DRIP-19-5/8 L X 4-7/8	033812
22	PAN-DRIP 19-1/2 LONG	035034
23	PANEL-CORNER-FRONT LEFT	063088
24	PANEL-SIDE LEFT	059906
25	FASTENER-DOOR LATCH	030787
26	FASTENER-DOOR STRIKE	030788

Model C713 Door and Beater Assembly

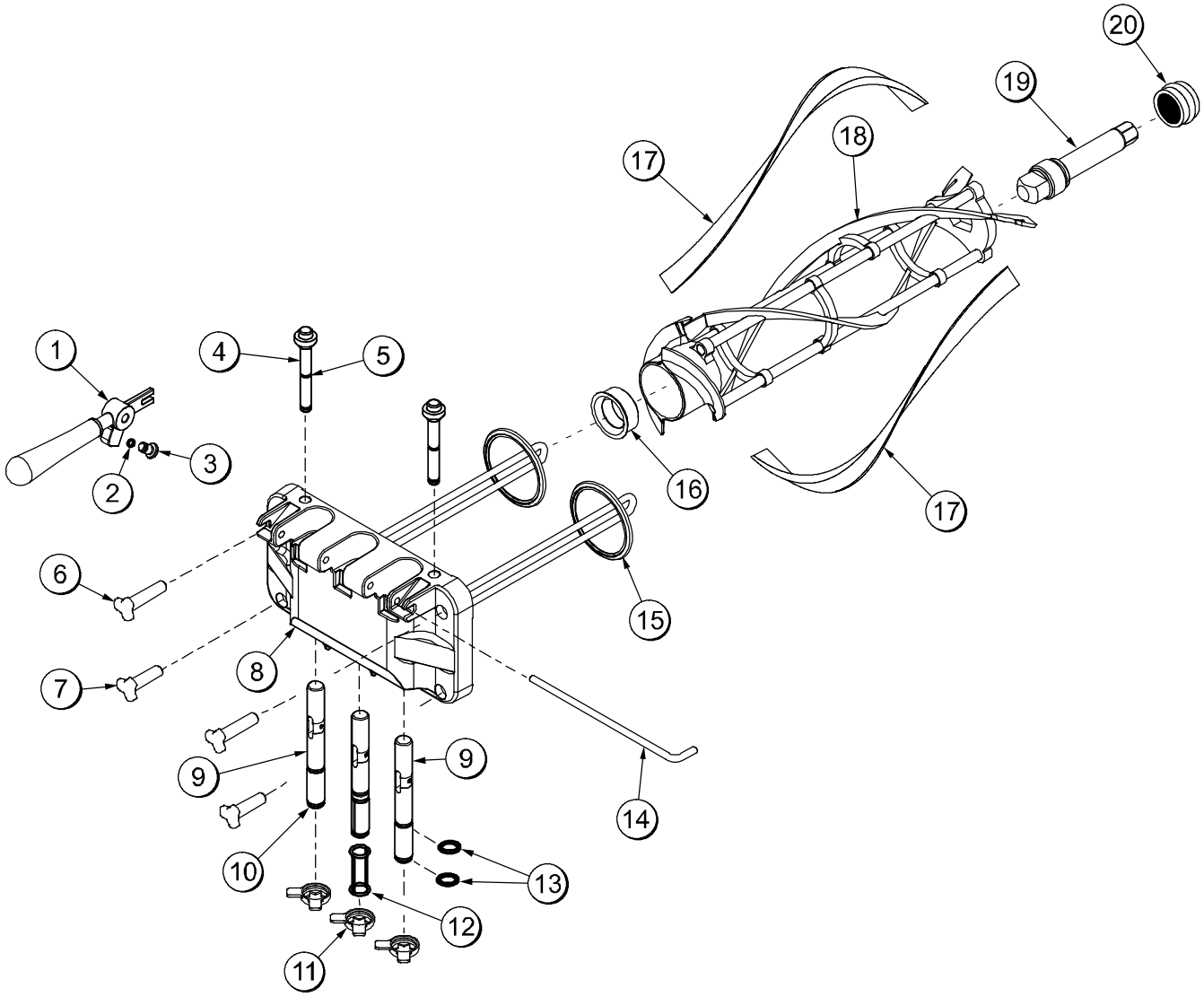

Figure 2

ITEM	DESCRIPTION	PART NO.
1	HANDLE A.-DRAW-WELDED	X56421-1
2	O-RING-1/4 OD X .070W 50	015872
3	SCREW-ADJUSTMENT-5/16-24	056332
4	PLUG-PRIME TWIN	059936
5	O-RING-1/2 OD X 0.70 W	024278
6	NUT-STUD-BLACK 3.250 LONG	058765
7	NUT-STUD-BLACK 2.563 LONG	058764
8	DOOR A.-3SPT*LG BAF*W/PRG	X59922
9	VALVE A.-DRAW	X59843
10	VALVE A.-DRAW CENTER	X62218

ITEM	DESCRIPTION	PART NO.
11	CAP-DESIGN 1.010" ID - 6 PT	014218
12	SEAL-DRAW VALVE	034698
13	O-RING-7/8 OD X .103 W	014402
14	PIN-HANDLE-TWIN	059894
15	GASKET-DOOR HT 4"-DOUBLE	048926
16	BEARING-FRONT	050216
17	BLADE-SCRAPER-PLASTIC 17L	035174
18	BEATER A.-3.4QT-HELICORE	X31761
19	SHAFT-BEATER	032564
20	SEAL-DRIVE SHAFT	032560

081008

Accessories

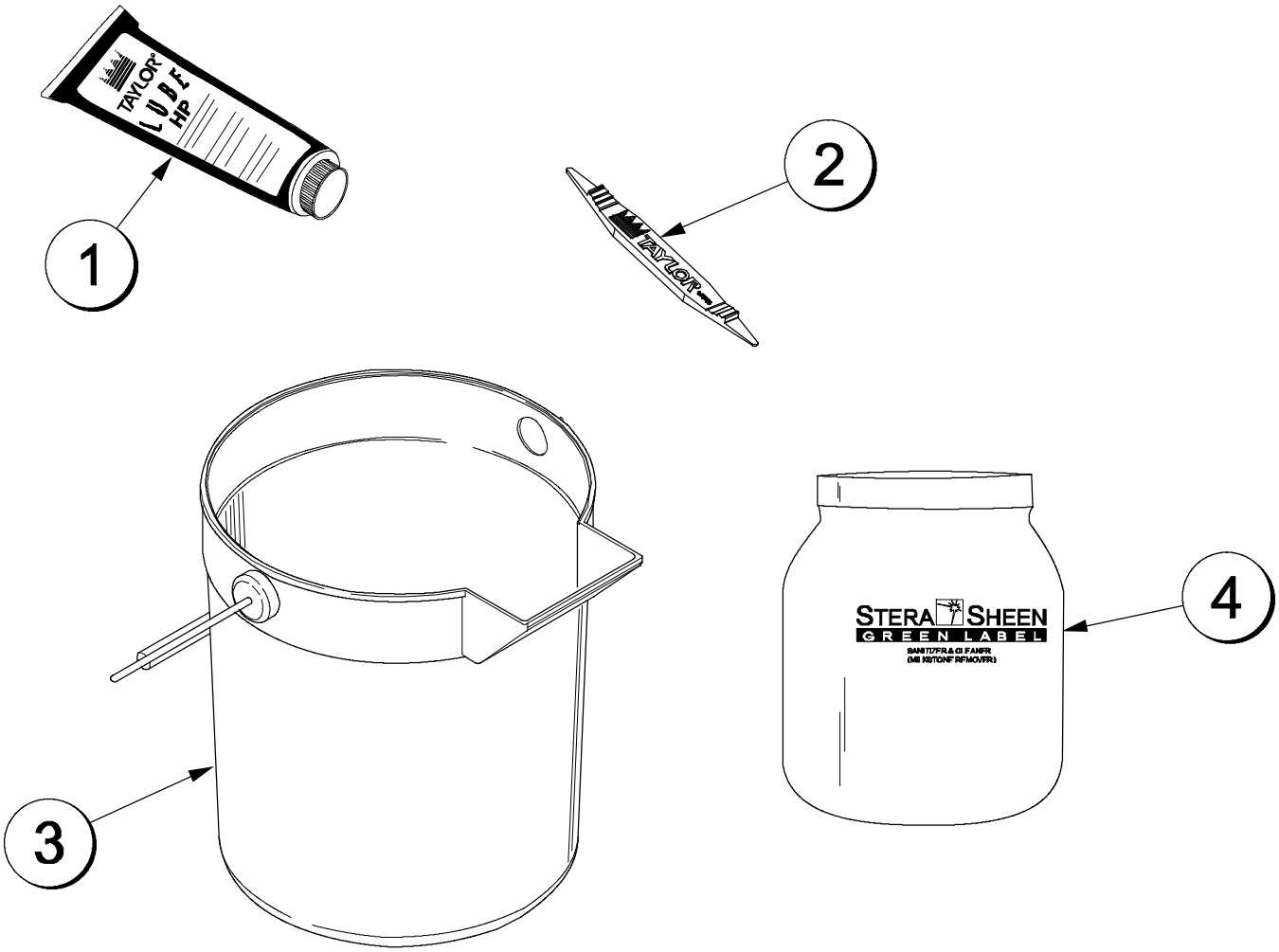

Figure 3

ITEM	DESCRIPTION	PART NO.
1	LUBRICANT-TAYLOR	047518
2	TOOL-O-RING REMOVAL	048260-WHT
3	PAIL-MIX 10 QT	013163

ITEM	DESCRIPTION	PART NO.
4	SANITIZER-STERA SHEEN	SEE NOTE
*	KIT A.-TUNE-UP	X49463-80

* Not Shown

Note: A sample container of sanitizer is sent with the unit. For reorders, order Stera Sheen part no. 055492 (100 2 oz. packs) or Kay-5 part no. 041082 (200 packs).

Brushes

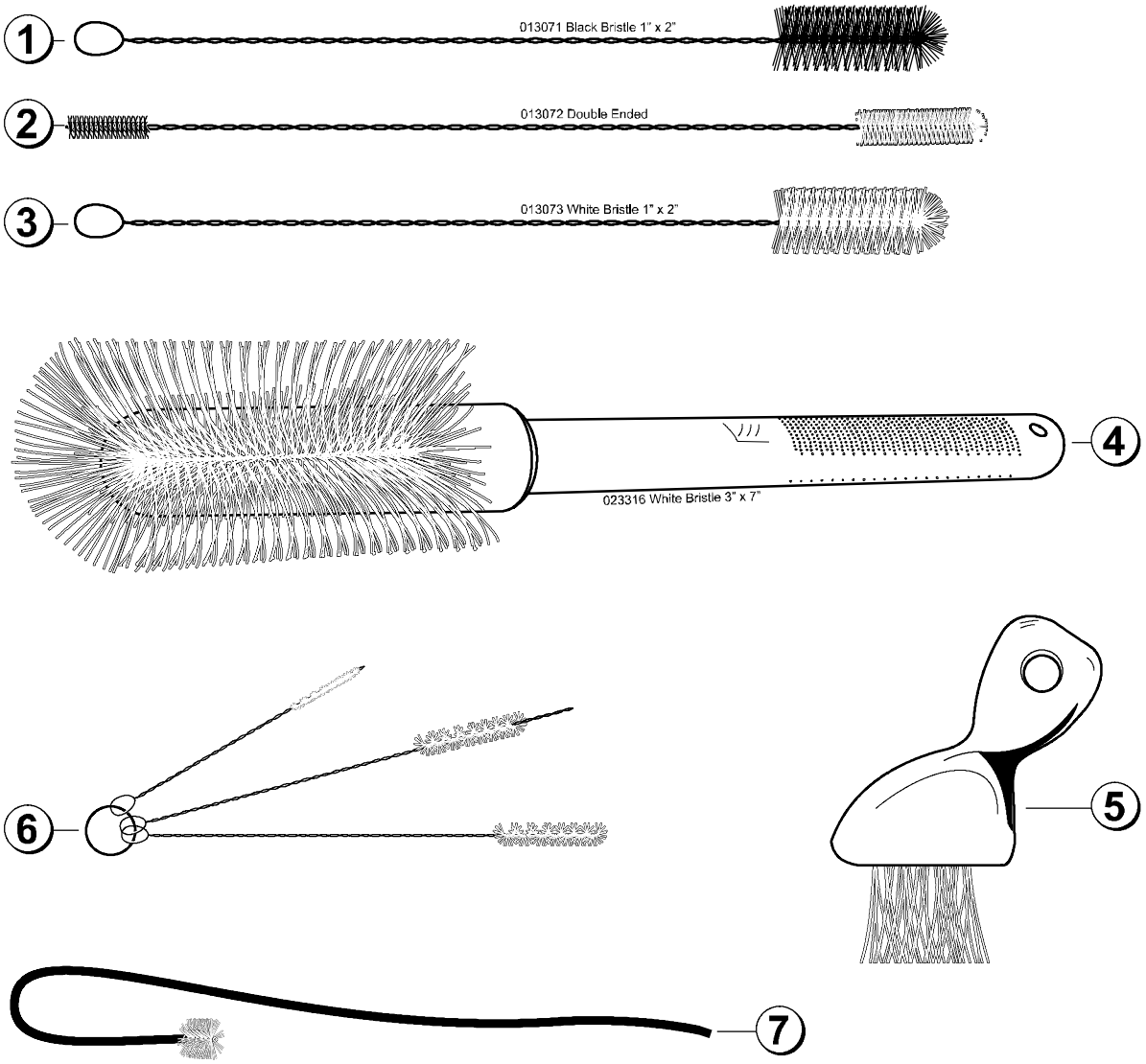

Figure 4

ITEM	DESCRIPTION	PART NO.
1	BLACK BRISTLE BRUSH	013071
2	DOUBLE END BRUSH	013072
3	WHITE BRISTLE BRUSH (1" x 2")	013073
4	WHITE BRISTLE BRUSH (3" x 7")	023316

ITEM	DESCRIPTION	PART NO.
5	BRUSH-END-DOOR SPOUT SS	039719
6	BRUSH-SET LVB	050103
7	BRUSH-PUMP SPOUT	054068

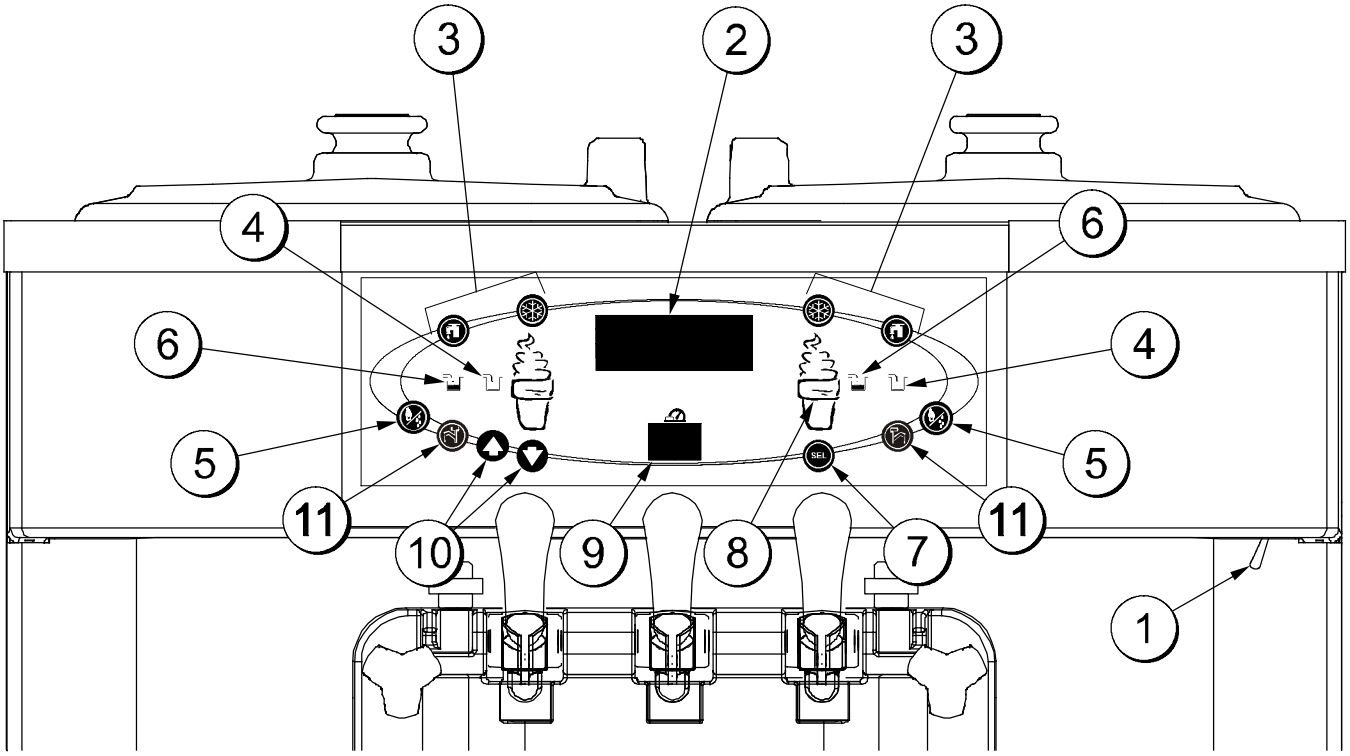

Figure 5

ITEM	DESCRIPTION
1	POWER SWITCH
2	LIQUID CRYSTAL DISPLAY
3	KEYPADS
4	MIX OUT INDICATOR
5	STANDBY KEY
6	MIX LOW INDICATOR

ITEM	DESCRIPTION
7	SELECT KEY
8	SERVICE MENU KEY
9	BRUSH CLEAN COUNTER
10	ARROW KEYS
11	TOPPING HEATER KEYS

Symbol Definitions

To better communicate in the International arena, symbols have replaced words on many of our operator switches, function, and fault indicators. Your Taylor equipment is designed with these International symbols.

The following chart identifies the symbol definitions.

= SELECT

= ON

= OFF

= UP ARROW

= DOWN ARROW

= AUTO

= WASH

= MIX LOW

= MIX OUT

= MENU DISPLAY

= STANDBY

= TOPPING HEATER-LEFT

= TOPPING HEATER-RIGHT

Power Switch

When placed in the ON position, the power switch allows control panel operation.

Fluorescent Display

The fluorescent display is located on the front control panel. During normal operation the display is blank. The display is used to show menu options and notifies the operator if a fault is detected. On International models, the display will indicate the temperature of the mix in the hopper.

Indicator Lights

MIX LOW - When the MIX LOW symbol is illuminated, the mix hopper has a low supply of mix and should be refilled as soon as possible.

MIX OUT - When the MIX OUT symbol is illuminated, the mix hopper has been almost completely exhausted and has an insufficient supply of mix to operate the freezer. At this time, the AUTO mode is locked out and the freezer will be placed in the STANDBY mode. To initiate the refrigeration system, add mix to the mix hopper and touch the AUTO symbol . The freezer will automatically begin operation.

Standby Symbol

During long “No Sale” periods, the unit can be placed into the Standby mode. This maintains product temperatures below 40°F (4.4°C) in both the hopper and the freezing cylinder, and helps prevent overbeating and product breakdown.

Using clean, sanitized hands, remove the air orifice. Lubricate the o-rings located on the end of the feed tube without the hole. Place that end of the tube into the mix inlet hole. When STANDBY is selected, the STANDBY symbol illuminates, indicating the Standby feature has been activated.

IMPORTANT: Make sure the level of mix in the hopper is below the mix inlet hole in the feed

130626

tube. Failure to follow this instruction may result in lower product quality when normal operation is resumed.

To resume normal operation, press the AUTO symbol ❄. When the unit cycles off, the product in the freezing cylinder will be at serving viscosity. At this time, turn the feed over. Place the end of the tube with the hole into the mix inlet hole. Install the air orifice.

Wash Symbol

The WASH symbol will illuminate when it is touched. This indicates beater motor operation. The STANDBY or AUTO modes must be cancelled first to activate the WASH mode.

Auto Symbol

The AUTO symbol ❄ will illuminate when it is touched. This indicates that the refrigeration system has been activated. In the AUTO mode, the WASH or STANDBY functions are automatically cancelled.

Note: An indicating light and an audible tone will sound whenever a mode of operation has been selected. To cancel any function, touch the key again. The light and the mode of operation will shut off.

Reset Mechanism

The reset buttons are located in the back panel of the machine. It protects the beater motor from an overload condition. Should an overload occur, the reset mechanism will trip. To properly reset the freezer place the power switch in the OFF position. Press the reset button firmly. Turn the power switch to the ON position. Touch the WASH symbol and observe the freezer's performance.

WARNING: Do not use metal objects to press the reset button. Failure to comply may result in severe personal injury or death.

If the beater motor is turning properly, touch the WASH symbol to cancel the cycle. Touch the AUTO symbol ❄ to resume normal operation. If the freezer shuts down again, contact your authorized service technician.

Feed Tube

The feed tube serves two purposes. One end of the tube has a hole and the other end does not. The air orifice maintains overrun and allows enough mix to enter the freezing cylinder after a draw.

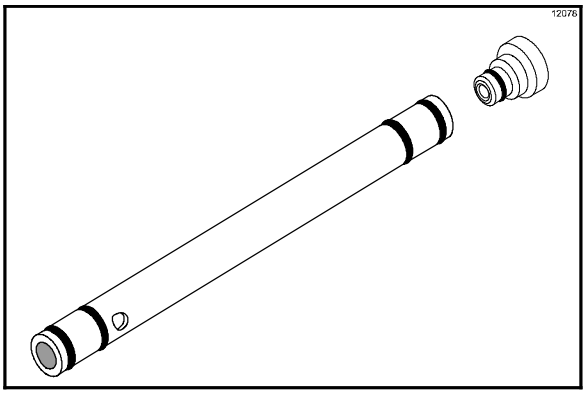

Figure 6

1. **Normal Operation**

   During normal operation, the end of the feed tube with the hole is placed into the mix inlet hole. Every time the draw handle is raised, new mix and air from the hopper flow into the freezing cylinder. This keeps the freezing cylinder properly loaded and maintains overrun.

2. **Long “No Sale” Periods**

   During long “No Sale” periods, the unit can be placed into the Standby mode. This maintains product temperatures below 40°F (4.4°C) in both the hopper and the freezing cylinder, and helps prevent overbeating and product breakdown. To activate STANDBY, enter the access code for the Manager Menu (see page 17.) Remove the air orifice. Lubricate the o-rings located on the end of the feed tube without the hole. Place that end of the tube into the mix inlet hole.

   IMPORTANT: Make sure the level of mix in the hopper is below the mix inlet hole in the feed tube. Failure to follow this instruction may result in lower product quality when normal operation is resumed.

   To resume normal operation, press the AUTO symbol ❄. When the unit cycles off, the product in the freezing cylinder will be at serving viscosity. At this time, turn the feed over. Place the end of the tube with the hole into the mix inlet hole. Install the air orifice. The air orifice is used to meter a certain amount of air into the freezing cylinder.

Adjustable Draw Handle

This unit features an adjustable draw handle to provide the best portion control, giving a better, consistent quality to your product and controlling costs. The draw handle should be adjusted to provide a flow rate of 5 to 7-1/2 oz. (142 to 213 g.) of product by weight per 10 seconds. To INCREASE the flow rate, tighten the screw. To DECREASE the flow rate, loosen the screw. (See Figure 7.)

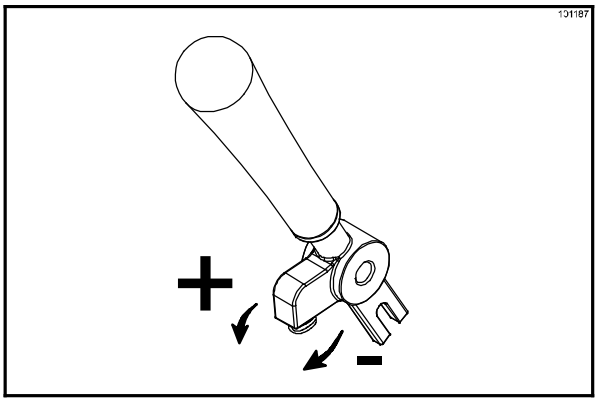

Figure 7

Operating Screen Descriptions

The fluorescent display located in the center of the control panel is normally blank during the daily operation of the machine. The display is activated when the SEL symbol or the Manager's Menu is selected. The display screen will also alert the operator of specific faults detected by the control.

Power Up

When the machine is powered the control system will initialize to perform a system check. The screen will display “INITIALIZING”. There will be four types of data the system will check: LANGUAGE, SYSTEM DATA, CONFIG DATA, and LOCKOUT DATA.

During the INITIALIZING... LANGUAGE screen, the alarm will be on. If the system detects corrupt data during INITIALIZING, the following display will alert the operator that the control settings may have been changed (See Figure 8.)

NVRAM FAULT
RESET TO DEFAULTS
PRESS SEL KEY

Figure 8

See “NVRAM FAULT” for instructions if the above message appears on the screen.

Once the system has initialized, the number of days remaining before the next required brush cleaning is indicated on the control panel and the SAFETY TIMEOUT screen is displayed with the alarm turned on. (See Figure 9.)

SAFETY TIMEOUT
ANY KEY ABORTS

Figure 9

The SAFETY TIMEOUT screen will be displayed with the alarm on, for 60 seconds or until any control symbol is selected.

After the safety timeout has been completed and the power switch is OFF, the following screen is displayed. (See Figure 10.)

POWER SWITCH OFF
- = - = - = - = - = -
UNIT CLEANED

Figure 10

Power Switch ON

When the power switch is placed in the ON position, the control panel touch keys become operative. The fluorescent display will be either blank or indicate that the unit has been cleaned. (See Figure 11.)

UNIT CLEANED

Figure 11

Brush Clean Counter

The Brush Clean Counter (item 9 on page 13) will display the number of hours since the freezer was last brush cleaned. After hour 99, it will change to a letter and a number (example: A0, A1. . B0, B1, etc.)

Manager's Menu

The Manager's Menu is used to enter the operator function displays. To access the Menu, touch the center of the CONE symbol on the control panel. The arrow symbols, the SEL symbol and the CONE symbol will be lit when the ACCESS CODE screen is displayed. (See Figure 12.)

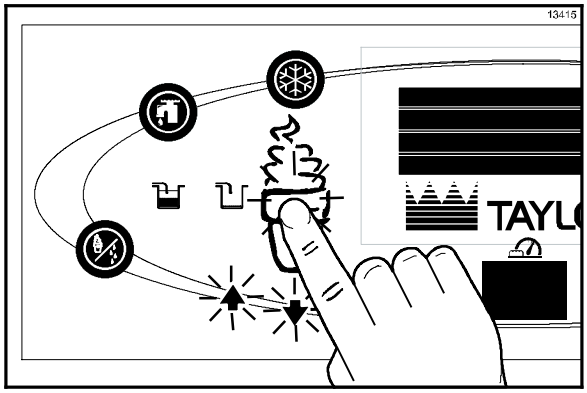

Figure 12

In the Menu program, the arrow symbols and the SEL symbol will function as menu keys.

UP ARROW - increases the value above the cursor and is used to scroll upward in text displays.

DOWN ARROW - decreases the value above the cursor and is used to scroll downward in text displays.

SEL - advances the cursor position to the right and is used to select menu options.

Note: The machine will continue operation in the mode it was in when the menu was selected. However, the control keys will not be lit and are non-functional when the Manager's Menu is displayed.

Entering Access Code

With the ACCESS CODE screen on the display use the SEL symbol to set the first code number in the cursor position. When the correct number is selected, touch the SEL symbol to move the cursor to the next number position. (See Figure 13.)

ENTER ACCESS CODE

8 3 0 9

Figure 13

Continue to enter the proper access code numbers (8309) until all four numbers are displayed, then touch the SEL symbol. The Manager's menu list will display on the screen provided the correct access code is entered.

If an incorrect number is entered for the access code, the display will exit the Menu program when the SEL symbol is selected. (See Figure 14.)

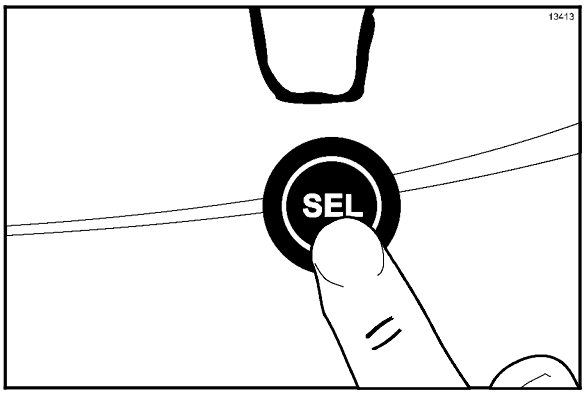

Figure 14

Menu Options

Touch the ARROW symbols to move up or down through the Menu. Select a Menu option by touching the SEL symbol. Exit the Menu program by selecting EXIT FROM MENU or touch the CONE symbol .

The following menu options are listed in the Manager's Menu.

EXIT FROM MENU
RESET DRAW COUNTER
SET CLOCK
AUTO START TIME
STANDBY MODE
MIX LEVEL AUDIBLE
LOCKOUT HISTORY
SYSTEM INFORMATION

Selecting “EXIT FROM MENU” will exit the Manager's Menu and the return the control panel symbols to normal operation.

The SERVING COUNTER screen is used to check or reset the number of servings dispensed from the machine. The SERVING COUNTER will automatically reset to zero when the machine is brush cleaned. (See Figure 15.)

```
                SERVINGS COUNTER

                0          0
> Next
```

Figure 15

Reset the SERVING COUNTER by selecting the SEL symbol to advance to the next screen. Select the UP arrow symbol to move the arrow (>) to YES and select the SEL symbol. The servings counter will reset to zero and exit back to the Manager's Menu. (See Figure 16.)

```
                RESET DRAW COUNTER

                YES
>               NO
```

Figure 16

The SET CLOCK option allows the Manager to adjust the control clock date and time. The date and time may only be changed after the freezer has been manually cleaned but before it has been placed in the AUTO or STANDBY mode. The following message will be displayed if the SET CLOCK option is selected when the machine is not in a brush clean state. (See Figure 17.)

```
SET CLOCK
12:01                7/15/2004
              NO CHANGES ALLOWED
Press Any Key
```

Figure 17

To change the date or time, select the SET CLOCK option in the menu. Touch the UP arrow symbol to advance the arrow from Exit to Change, then touch the SEL symbol to select the Change option. (See Figure 18.)

```
SET CLOCK
12:01                7/15/2004
  Change
> Exit
```

Figure 18

Change the time by touching the UP arrow with the cursor under the hour position. Move the cursor to the minutes by touching the SEL symbol. Once the correct minutes are entered, touch the SEL symbol to advance the cursor to the month. (See Figure 19.)

```
SET CLOCK
12:01              7/15/2004

> Exit
```

Figure 19

Enter the correct month, day, and year. Then touch the SEL symbol to advance to the DAYLIGHT SAVING TIME screen. (See Figure 20.)

```
        DAYLIGHT SAVING TIME
              ENABLED
>           Enable
            Disable
```

Figure 20

The Daylight Saving feature when enabled, will automatically adjust the control clock for daylight saving time. To Disable the Daylight Saving Time feature, select the UP arrow to move the arrow to Disable. Then touch the SEL symbol to save the new setting.

The AUTO START TIME option allows the Manager to set the time of day at which the machine automatically enters the AUTO mode from the STANDBY mode. The machine must be in the STANDBY mode in order to AUTO start at the programmable time. The AUTO START TIME can also be disabled and require starting the AUTO mode manually. (See Figure 21.)

```
        AUTO START TIME
             DISABLED
            Enable
>           Disable
```

Figure 21

Enable the AUTO START TIME by selecting the UP arrow symbol to move the arrow up to Enable. Touch the SEL symbol to advance to the next screen. (See Figure 22.)

```
        AUTO START TIME
              00:00
            Change
>           Exit
```

Figure 22

Program the AUTO START TIME by selecting the UP arrow symbol to move the arrow to Change. Touch the SEL symbol to advance to the next screen. (See Figure 23.)

```
        AUTO START TIME
              00:00
```

Figure 23

Use the arrow symbols to program the AUTO START TIME by increasing or decreasing the hour setting above the cursor. Touch the SEL symbol to advance the cursor and program the minutes setting. Select the SEL symbol to return to the previous screen with the new time setting displayed. Select the SEL symbol to exit the screen and return to the Menu.

The STANDBY option is used to manually place either side of the machine in the Standby mode during long, no draw periods. Select the STANDBY screen from the Menu. Touch the SEL symbol to activate Standby.

Discontinue Standby operation by exiting the Manager's Menu and select the AUTO mode. (See Figure 24.)

```
        STANDBY MODE

>           EXIT
```

Figure 24

The MIX LEVEL AUDIBLE option, when enabled, will alert the operator with an audible tone when there is mix low or mix out condition. The following screen is displayed upon selecting this option. (See Figure 25.)

```
MIX LEVEL AUDIBLE

>        Enable
         Disable
```

Figure 25

Disable the audible tone feature by selecting the UP arrow symbol to move the arrow to Disable. Select the SEL symbol to save the new setting and return to the Menu. The control panel icons for Mix Low and Mix Out will light as the mix level drops in the hopper but the audible tone will be disabled.

The LOCKOUT HISTORY screen displays a history of the faults. (See Figure 26.)

```
LOCKOUT HISTORY
07/27/04                    12:58
<        HPR THERM FAIL
>        EXIT
```

Figure 26

Use the arrow symbols to advance forward or backward to view each screen. The following list indicates the variable messages that may appear.

Faults Occurring While in AUTO Mode

HPR>41F (5C) AFTER 4 HR - The mix temperature in the hopper was above 41°F (5°C) more than four hours.

BRL>41F (5C) AFTER 4 HR - The mix temperature in the freezing cylinder was above 41°F (5°C) more than four hours.

HPR>41F (5C) AFTER PF - The mix temperature in the hopper was above 41°F (5°C) more than four hours following a power failure.

BRL>41F (5C) AFTER PF - The mix temperature in the freezing cylinder was above 41°F (5°C) more than four hours following a power failure.

HPR>45F (7C) AFTER 1 HR - The mix temperature in the hopper was above 45°F (7°C) more than one hour.

BRL>45F (7C) AFTER 1 HR - The mix temperature in the freezing cylinder was above 45°F (7°C) more than one hour.

HPR>59F (15C) - The mix temperature in the hopper exceeded 59°F (15°C).

BRL>59F (15C) - The mix temperature in the freezing cylinder exceeded 59°F (15°C).

Note: Refer to your local health codes regarding temperature recommendations for procedures to follow if these fault screens appear.

The SYSTEM INFORMATION is displayed on three separate screens. The first screen contains the control and software version installed in the machine. (See Figure 27.)

SOFTWARE VERSION
C713 CONTROL UVC3
VERSION 1.04
> Next

Figure 27

Touch the SEL symbol to advance to the next system information screen containing the software language version. (See Figure 28.)

Language
V1.11 r 00 English 515

> Next

Figure 28

Touch the SEL symbol to advance to the third system information screen containing the model bill of material and machine serial number. Touching the SEL symbol again will return to the Menu list. (See Figure 29.)

B.O.M. C71333C000
S/N K0000000

> Next

Figure 29

The C713 machine stores mix in the hoppers. It has two 3.4 quart (3.2 liter) capacity freezing cylinders with a three spout door. Mix flows by gravity through a feed tube down into the freezing cylinders.

We begin our instructions at the point where we enter the store in the morning and find the parts disassembled and laid out to air dry from the previous night's cleaning.

These opening procedures will show you how to assemble these parts into the freezer, sanitize them, and prime the freezer with fresh mix in preparation to serve your first portion.

If you are disassembling the machine for the first time or need information to get to this starting point in our instructions, turn to page 30, “Disassembly”, and start there.

Freezing Cylinder Assembly

Note: When lubricating parts, use an approved food grade lubricant (example: Taylor Lube).

MAKE SURE THE POWER SWITCH IS IN THE “OFF” POSITION! Failure to follow this instruction may result in severe personal injury from hazardous moving parts.

Step 1
Before installing the beater drive shaft, lubricate the groove on the beater drive shaft.

Step 2
Slide the beater drive shaft boot seal over the small end of the beater drive shaft and engage into the groove on the shaft.

Step 3
Heavily lubricate the inside portion of the boot seal and also lubricate the flat end of the boot seal that comes in contact with the rear shell bearing.

Step 4
Apply an even coat of lubricant to the shaft. DO NOT lubricate the hex end.

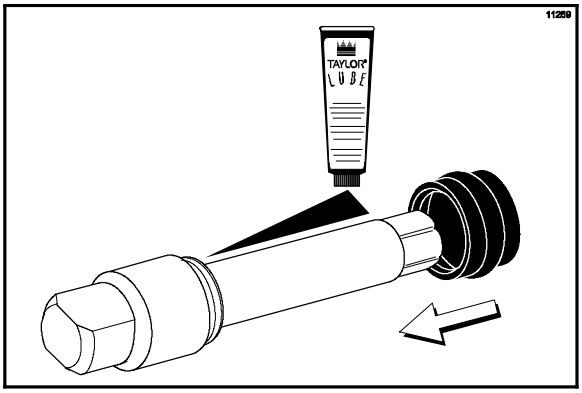

Figure 30

Note: To ensure the mix does not leak out of the back of the freezing cylinder, the middle section of the boot seal should be convex or extend out from the seal. If the middle section of the boot seal is concave or extending into the middle of the seal, turn the seal inside out.

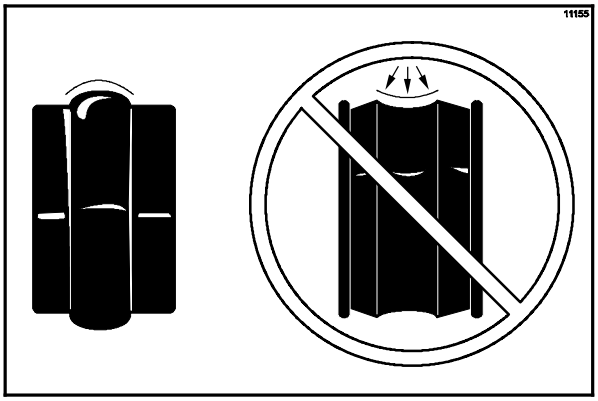

Figure 31

110107

Step 5
Insert the beater drive shaft through the rear shell bearing in the freezing cylinder and engage the hex end firmly into the drive coupling.

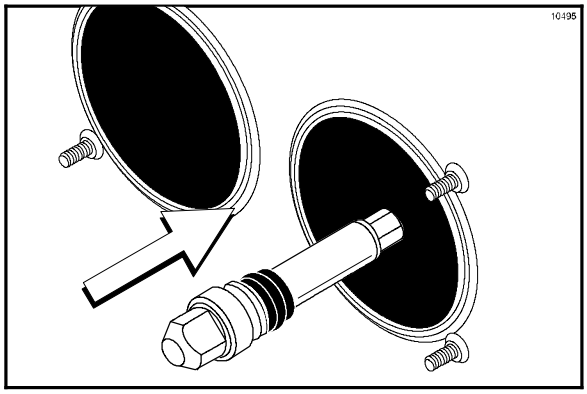

Figure 32

USE EXTREME CAUTION when handling the beater assembly. The scraper blades are very sharp and may cause injury.

Step 6
Before installing the beater assembly**,** check the scraper blades. If they are in good condition, take one of the scraper blades and slip it under the hook at the front of the beater. Wrap the blade around the beater, following the helix and pushing the blade down onto the helix as you wrap. At the back end of the beater, slip the blade under the hook.

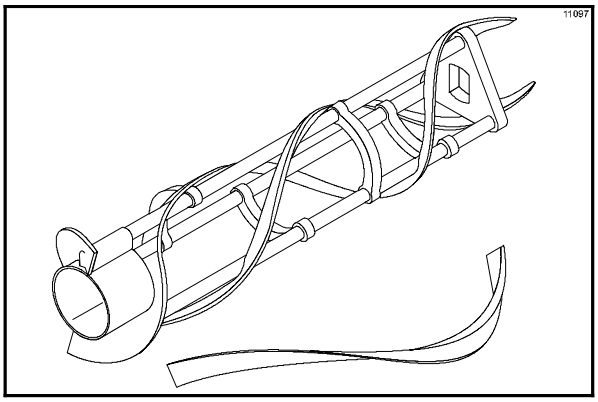

Figure 33

Repeat this step for the second scraper blade.

Step 7
Holding the beater securely, slide the beater into the freezing cylinder about one-third of the way in. Looking into the freezing cylinder, align the hole at the rear of the beater with the flats on the end of the drive shaft.

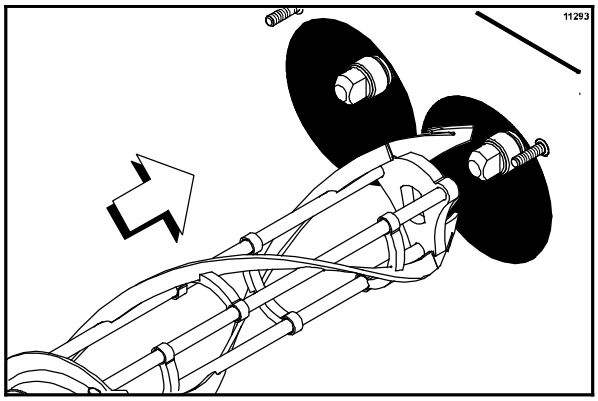

Figure 34

Step 8
Slide the beater the remainder of the way into the freezing cylinder and over the end of the drive shaft. The beater should fit snugly but not so tightly that the beater cannot be turned slightly to engage the drive shaft.

Make sure the beater assembly is in position over the drive shaft. Turn the beater slightly to be certain that the beater is properly seated. When in position, the beater will not protrude beyond the front of the freezing cylinder.

Step 9
Repeat these steps for the other side of the machine.

Step 10
To assemble the freezer door, place the door gaskets into the grooves on the back of the freezer door. Slide the front bearings over the baffle rods. The flanged edges should be against the door. DO NOT lubricate the gaskets or bearings.

Step 11
Slide the two o-rings into the grooves on each prime plug. Apply an even coat of Taylor Lube to the o-rings and shafts.

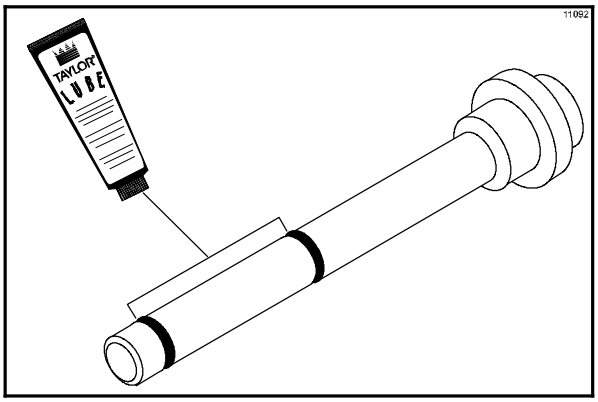

Figure 35

Step 12
Insert the prime plugs into the holes in the top of the freezer door and push down.

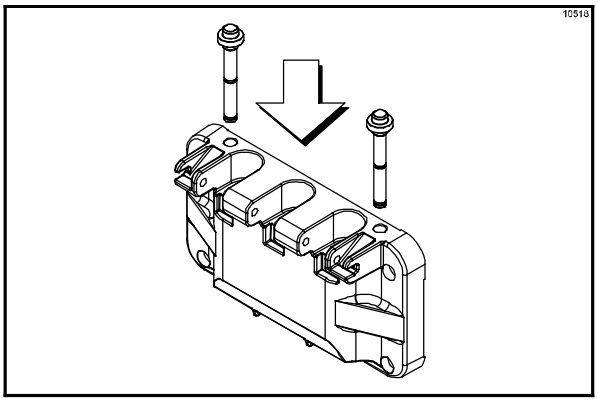

Figure 36

Step 13
To install the freezer door, insert the baffle rods through the beaters in the freezing cylinders.

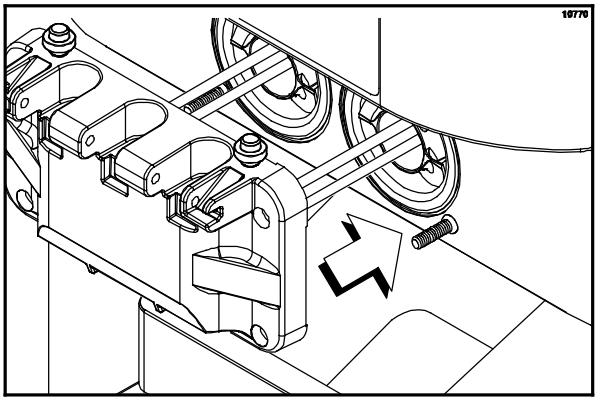

Figure 37

With the door seated on the freezer studs, install the handscrews. Use the long handscrews on the top and the short handscrews on the bottom. Tighten them equally in a criss-cross pattern to insure the door is snug.

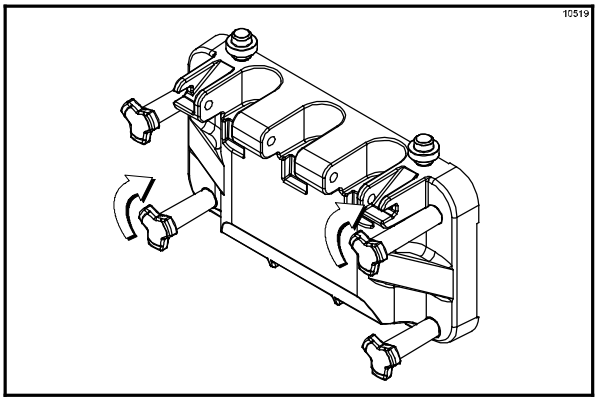

Figure 38

Step 14
Slide the three o-rings into the grooves of each standard draw valve. Slide the H-ring and o-ring into the grooves of the center draw valve. Lubricate the H-ring and o-rings.

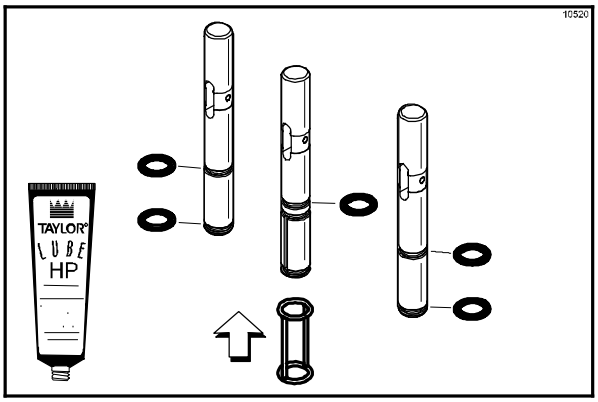

Figure 39

Step 15
Lubricate the inside of the freezer door spouts, top and bottom.

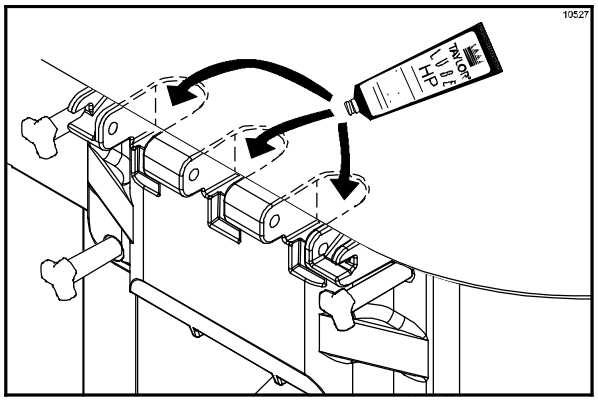

Figure 40

Step 16
Insert the draw valves from the bottom until the slot in the draw valves come into view.

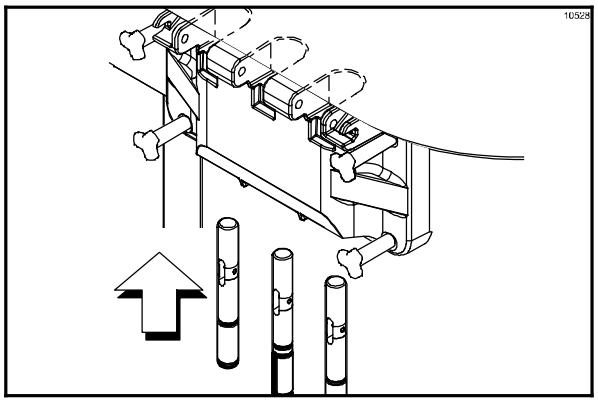

Figure 41

Step 17
Slide the fork of the draw handles in the slot of the draw valves, starting from the right.

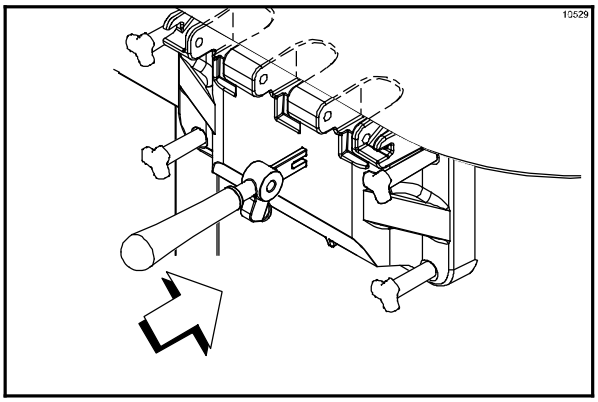

Figure 42

Step 18
Slide the pivot pin through each draw handle as they are inserted into the draw valves.

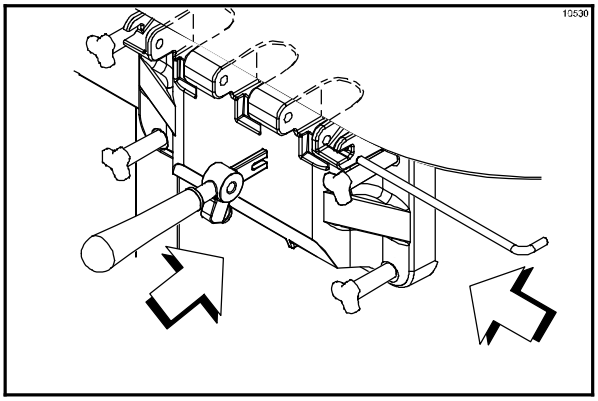

Figure 43

Note: This freezer features three adjustable draw handles to provide portion control, giving a better consistent quality to your product and controlling costs. The draw handle should be adjusted to provide a flow rate of 5 to 7-1/2 oz. (142 g. to 213 g.) of product by weight per 10 seconds.

To INCREASE the flow rate, turn the adjustment screw CLOCKWISE. Turn the adjustment screw COUNTER-CLOCKWISE to DECREASE the flow rate.

Step 19
Snap the design caps over the bottom of the door spouts.

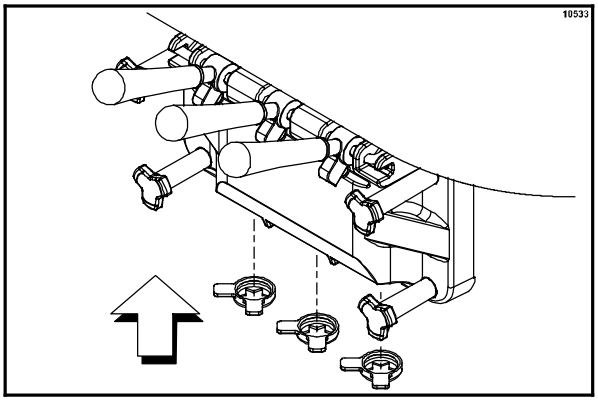

Figure 44

Step 20
Slide the two drip pans into the holes in the side panels.

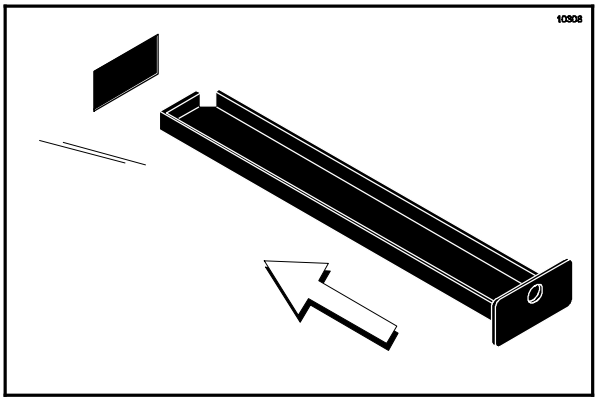

Figure 45

Step 21
Install the front drip tray and splash shield under the door spouts.

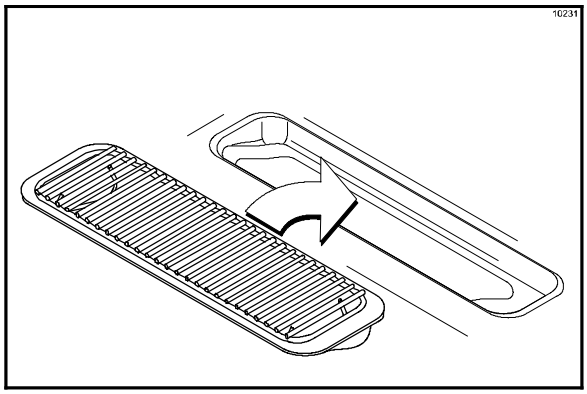

Figure 46

Step 22
Slide two o-rings on one end of the feed tube. Slide two o-rings on the other end of the feed tube.

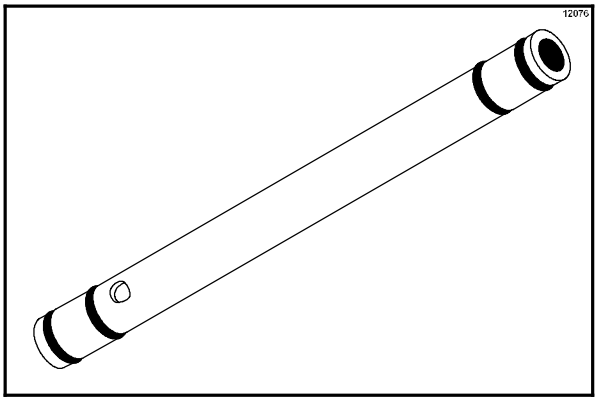

Figure 47

Step 23
Slide the small o-ring into the groove of the air orifice. Do not lubricate the o-ring.

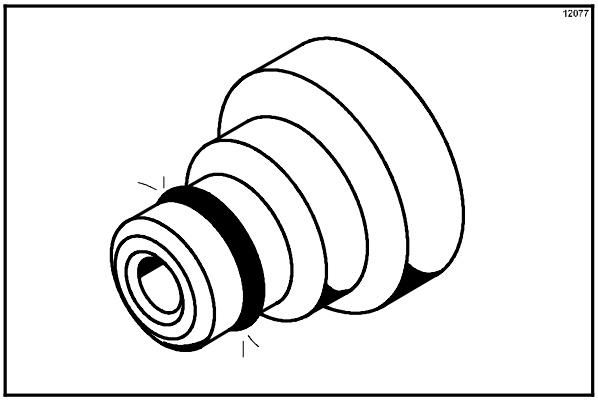

Figure 48

Note: Make sure the hole in the air orifice is clean and is not clogged. If the hole in the air orifice should become clogged, use soap and hot water to clear the hole. **Do not enlarge the hole in the air orifice.**

Step 24
Install the air orifice into the hole in the top of the feed tube (end without the small hole on the side).

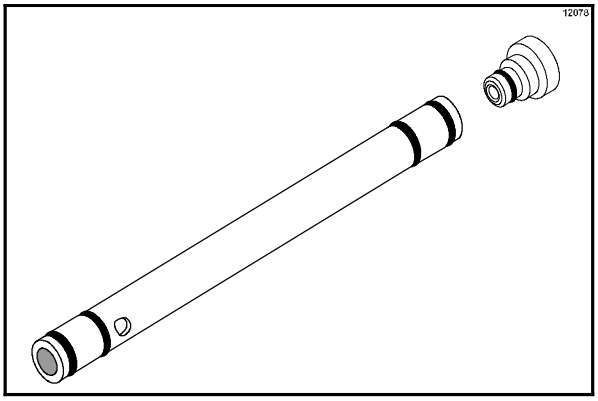

Figure 49

Step 25
Lay the feed tube (with the air orifice installed) in the bottom of the mix hopper for sanitizing.

Step 26
Repeat steps 22 through 25 for the other side of the machine.

Sanitizing

Step 1
Prepare an approved 100 PPM sanitizing solution (examples: 2-1/2 gal. [9.5 liters] of Kay-5® or 2 gal. [7.6 liters] of Stera-Sheen®). USE WARM WATER AND FOLLOW THE MANUFACTURER'S SPECIFICATIONS.

Step 2
Pour the sanitizing solution over all the parts in the bottom of the mix hopper and allow it to flow into the freezing cylinder.

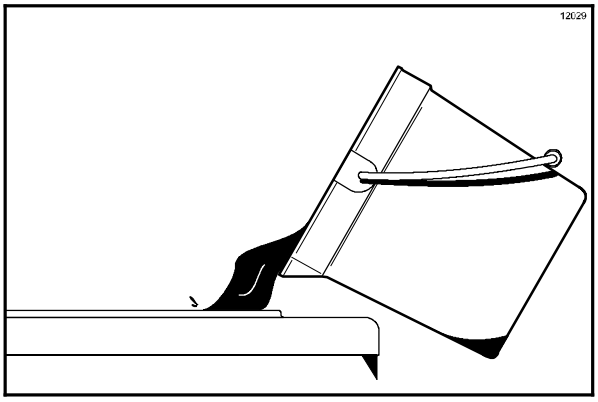

Figure 50

Note: You have just sanitized the mix hopper and parts; therefore, be sure your hands are clean and sanitized before going on in these instructions.

Step 3
While the solution is flowing into the freezing cylinder, take particular care to brush-clean the mix level sensing probe on the bottom of the hopper, the mix hopper, the mix inlet hole, and the mix feed tube.

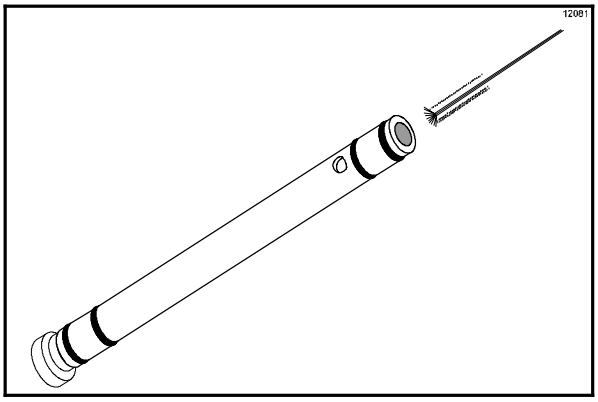

Figure 51

Step 4
Prepare another pail of approved 100 PPM sanitizing solution (examples: 2-1/2 gal. [9.5 liters] of Kay-5® or 2 gal. [7.6 liters] of Stera-Sheen®). USE WARM WATER AND FOLLOW THE MANUFACTURER'S SPECIFICATIONS.

Step 5
Pour the sanitizing solution into the mix hopper.

Step 6
Brush the exposed sides of the hopper.

Step 7
Place the power switch in the ON position.

Step 8
Touch the WASH symbol. This will cause the sanitizing solution in the freezing cylinder to be agitated. Wait at least 5 minutes before proceeding with these instructions.

Step 9
With an empty pail beneath the door spouts, raise the prime plug.

Step 10
When a steady stream of sanitizing solution is flowing from the prime plug opening in the bottom of the freezer door, open the draw valve. Momentarily open the center draw valve to sanitize the center door spout. Draw off the remaining sanitizing solution.

Step 11
Once the sanitizer stops flowing from the door spout, touch the WASH symbol and close the draw valve.

Note: Be sure your hands are clean and sanitized before going on in these instructions.

Step 12
Lubricate the feed tube o-rings on the end with the small hole on the side. Stand the feed tube in the corner of the hopper.

Step 13
Repeat these steps for the other side of the machine.

Priming

Note: Use only FRESH MIX when priming the freezer.

Step 1
Place an empty mix pail beneath the door spouts. With the prime plug in the UP position, pour 2-1/2 gallons (9.5 liters) of FRESH mix into the mix hopper and allow it to flow into the freezing cylinder.

Step 2
Open the draw valve to remove all sanitizing solution. When only fresh mix is flowing, close the draw valve.

Step 3
Once a steady stream of mix starts to flow from the prime plug opening in the bottom of the freezer door, push the prime plug down.

Step 4
When mix stops bubbling down into the freezing cylinder, install the end of the feed tube **with the hole in it** into the mix inlet hole in the mix hopper. Make sure the air orifice is installed in the feed tube.

Step 5
Select the AUTO symbol.

Step 6
Fill the hopper with fresh mix and place the mix hopper cover in position.

Step 7
Repeat these steps for the other side of the machine.

Manual Brush Cleaning

ALWAYS FOLLOW LOCAL HEALTH CODES.

To disassemble the Model C713, the following items will be needed:

- Two cleaning and sanitizing pails
- Sanitizer/Cleaner
- Necessary brushes (provided with freezer)
- Single service towels

Draining Product From The Freezing Cylinder

Step 1
Remove the hopper cover and the feed tube. Take them to the sink for cleaning.

Step 2
With a pail beneath the door spouts, touch the WASH symbol and open the draw valve.

Step 3
If local health codes permit the use of rerun, place a sanitized, NSF approved stainless steel rerun container beneath the door spout. Press the WASH key and open the draw valve. Drain the remaining product from the freezing cylinder and mix hopper. When the flow of product stops, press the WASH key and close the draw valve. Place the sanitized lid on the rerun container and place it in the walk-in cooler.

Note: If local health codes DO NOT permit the use of rerun, the product must be discarded. Follow the instructions in the previous step, except drain the product into a mix pail and properly discard the mix.

ALWAYS FOLLOW LOCAL HEALTH CODES.

Repeat these steps for the other side of the machine.

Rinsing

Step 1
Pour two gallons (7.6 liters) of cool, clean water into the mix hopper. With the white hopper brush, scrub the mix hopper and the mix level sensing probe. Using the double ended brush, brush clean the mix inlet hole.

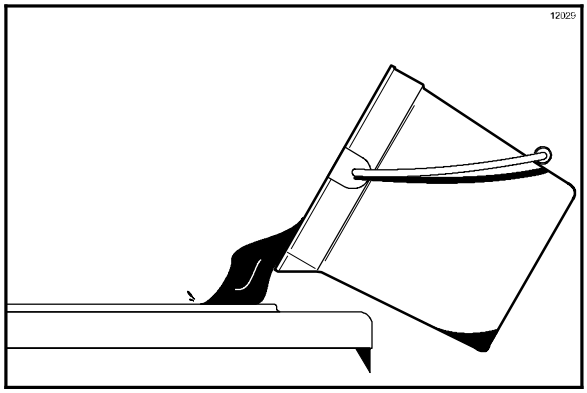

Figure 52

Note: Do not brush clean the mix inlet hole while the machine is in the WASH mode.

Step 2
With a mix pail beneath the door spout, raise the prime plug and touch the WASH symbol .

Step 3
When a steady stream of rinse water is flowing from the prime plug opening in the bottom of the freezer door, open the draw valve. Drain all the rinse water from the door spout. Close the draw valve, and touch the WASH symbol, cancelling the Wash mode.

Step 4
Repeat this procedure using clean, warm water until the water being discharged is clear.

Repeat these steps for the other side of the machine.

Hopper Cleaning

Note: Failure to follow these steps will result in milk-stone build-up.

Step 1
Prepare an approved 100 PPM cleaning solution (examples: 2-1/2 gal. [9.5 liters] of Kay-5® or 2 gal. [7.6 liters] of Stera-Sheen®). USE WARM WATER AND FOLLOW THE MANUFACTURER'S SPECIFICATIONS.

Step 2
Push the prime plug down. Pour the cleaning solution into the hopper and allow it to flow into the freezing cylinder.

Step 3
Using the white hopper brush, clean the mix hopper and the mix level sensing probes. Using the double ended brush, clean the mix inlet hole.

Note: Do not brush clean the mix inlet hole while the machine is in the WASH mode.

Step 4
Touch the WASH symbol . This will cause the cleaning solution in the freezing cylinder to come in contact with all areas of the freezing cylinder.

Step 5
Place an empty pail beneath the door spouts and raise the prime plug.

Step 6
When a steady stream of cleaning solution is flowing from the prime plug opening in the bottom of the freezer door, open the draw valve. Draw off all the solution.

Step 7
Once the cleaning solution stops flowing from the door spout, close the draw valve and touch the WASH symbol , cancelling the Wash mode.

Repeat these steps on the other side of the machine.

Disassembly

Step 1
Place the power switch in the OFF position.

Step 2
Remove the handscrews, freezer door, beater and scraper blades, and drive shaft with drive shaft seal from the freezing cylinder.

Step 3
Remove the scraper blades from the beater assembly.

Step 4
Remove the drive shaft seal from the drive shaft.

Step 5
Remove the freezer door gasket, front bearing, pivot pin, draw handle, draw valve, prime plugs and design caps. Remove the three o-rings from the draw valve.

Repeat these steps on the other side of the machine.

Step 6
Remove the front drip tray and splash shield.

Step 7
Remove all drip pans. Take them to the sink for cleaning.

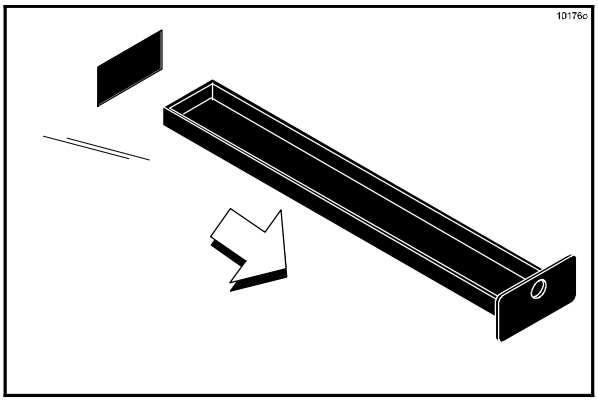

Figure 53

Note: If the drip pans are filled with an excessive amount of mix, it is an indication that the drive shaft seal(s), or o-ring(s) should be replaced or properly lubricated.

Brush Cleaning

Step 1
Prepare an approved 100 PPM cleaning solution (examples: 2-1/2 gal. [9.5 liters] of Kay-5® or 2 gal. [7.6 liters] of Stera-Sheen®). USE WARM WATER AND FOLLOW THE MANUFACTURER'S SPECIFICATIONS. Make sure all brushes provided with the freezer are available for brush cleaning.

Step 2
Thoroughly brush clean all disassembled parts in the cleaning solution, making sure all lubricant and mix film is removed. Be sure to brush all surfaces and holes, especially the holes in the freezer door.

Step 3
Rinse all parts with clean, warm water. Place the parts on a clean, dry surface to air dry overnight.

Step 4
Return to the freezer with a small amount of cleaning solution. Using the black brush, clean the rear shell bearing at the back of the freezing cylinder.

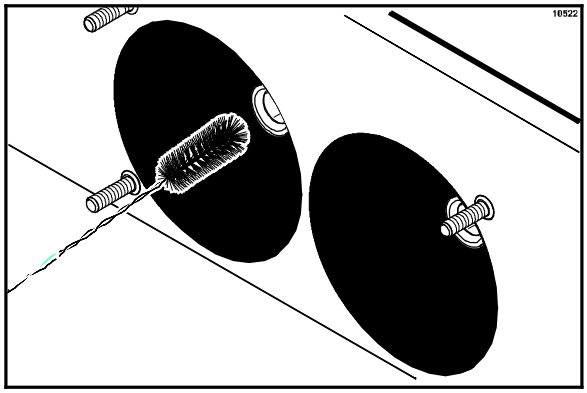

Figure 54

Repeat these steps on the other side of the machine.

Step 5
Wipe all exterior surfaces of the freezer with a clean, sanitized towel.

Section 7 Important: Operator Checklist

During Cleaning and Sanitizing

ALWAYS FOLLOW LOCAL HEALTH CODES.

Cleaning and sanitizing schedules are governed by federal, state, or local regulatory agencies, and must be followed accordingly. If the unit has a "Standby mode", it must not be used in lieu of proper cleaning and sanitizing procedures and frequencies set forth by the ruling health authority. The following check points should be stressed during the cleaning and sanitizing operations.

Troubleshooting Bacterial Count

☐ 1. Thoroughly clean and sanitize the machine regularly, including complete disassembly and brush cleaning.

☐ 2. Use all brushes supplied for thorough cleaning. The brushes are specially designed to reach all mix passageways.

☐ 3. Use the white bristle brush to clean the mix inlet hole which extends from the mix hopper down to the rear of the freezing cylinder.

☐ 4. Use the black bristle brush to thoroughly clean the rear shell bearing located at the rear of the freezing cylinder. Be sure there is a generous amount of cleaning solution on the brush.

☐ 5. IF LOCAL HEALTH CODES PERMIT THE USE OF RERUN, make sure the mix rerun is stored in a sanitized, covered, NSF approved stainless steel rerun container and used the following day. **DO NOT prime the machine with rerun.** When using rerun, skim off the foam and discard; then mix the rerun with fresh mix in a ratio of 50/50 during the day's operation.

☐ 6. On a designated day of the week, run the mix as low as feasible and discard it after closing. This will break the rerun cycle and reduce the possibility of high bacteria and coliform counts.

☐ 7. Properly prepare the cleaning and sanitizing solutions. Read and follow the label directions carefully. Too strong of a solution may damage the parts and too weak of a solution will not do an adequate job of cleaning or sanitizing.

☐ 8. The temperature of the mix in the mix hopper and walk-in cooler should be below 40°F (4.4°C).

Regular Maintenance Checks

☐ 1. Replace scraper blades that are nicked or damaged. Before installing the beater assembly, be certain that scraper blades are properly attached to the helix.

☐ 2. Check the rear shell bearing for signs of wear (excessive mix leakage in rear drip pan) and be certain it is properly cleaned.

☐ 3. Using a screwdriver and cloth towel, keep the rear shell bearing and the female hex drive socket clean and free of lubricant and mix deposits.

120210

☐ 4. Dispose of o-rings and seals if they are worn, torn, or fit too loosely, and replace with new ones.

☐ 5. Follow all lubricating procedures as outlined in “Assembly”.

☐ 6. If your machine is air cooled, check the condensers for accumulation of dirt and lint. Dirty condensers will reduce the efficiency and capacity of the machine. Condensers should be cleaned **monthly** with a soft brush. **Never** use screwdrivers or other metal probes to clean between the fins.
Note: For machines equipped with an air filter, it will be necessary to vacuum clean the filters on a monthly schedule.

Caution: Always disconnect electrical power prior to cleaning the condenser. Failure to follow this instruction may result in electrocution.

☐ 7. If your machine is water cooled, check the water lines for kinks or leaks. Kinks can occur when the machine is moved back and forth for cleaning or maintenance purposes. Deteriorated or cracked water lines should be replaced only by an authorized Taylor distributor.

Winter Storage

If the place of business is to be closed during the winter months, it is important to protect the freezer by following certain precautions, particularly if the building is subject to freezing conditions.

Disconnect the freezer from the main power source to prevent possible electrical damage.

On water cooled freezers, disconnect the water supply. Relieve pressure on the spring in the water valve. Use air pressure on the outlet side to blow out any water remaining in the condenser. **This is extremely important.** Failure to follow this procedure may cause severe and costly damage to the refrigeration system.

Your local Taylor Distributor can perform this winter storage service for you.

Wrap detachable parts of the freezer such as beater, blades, drive shaft, and freezer door, and place them in a protected dry place. Rubber trim parts and gaskets can be protected by wrapping them with moisture-proof paper. All parts should be thoroughly cleaned of dried mix or lubrication which attract mice and other vermin.

It is recommended that an authorized service technician perform winter storage draining, to insure all water has been removed. This will guard against freezing and rupturing of the components.

Section 8 Troubleshooting Guide

PROBLEM	PROBABLE CAUSE	REMEDY	PAGE REF.
1. No product is being dispensed.	a. Low on mix. The MIX OUT light is on.	a. Add mix to the mix hopper. Return to AUTO mode.	28
	b. The power switch is in the OFF position.	b. Place the power switch to ON and select AUTO.	28
	c. Machine not in AUTO mode.	c. Select AUTO and allow machine to cycle off before drawing product.	28
	d. Beater motor is out on reset. The BEATER OVERLOAD message displayed.	d. Turn the machine off. Press the reset button. Restart the machine in AUTO.	- - -
	e. Freeze-up in mix inlet hole.	e. Call an authorized service technician.	- - -
	f. Feed tube is not properly installed.	f. Make sure feed tube is properly installed.	28
2. The product is too soft.	a. Draw rate is set too fast.	a. Adjust draw rate of 5 to 7 1/2 oz. (142 g. to 213 g.) of product by weight in 10 seconds.	26
3. The product is too thick.	a. Freezing cylinder not primed correctly.	a. Drain the freezing cylinder and reprime the machine.	28
	b. The viscosity control is set too cold.	b. Call an authorized service technician.	- - -
	c. Freeze-up in mix inlet hole.	c. Call an authorized service technician.	- - -

PROBLEM	PROBABLE CAUSE	REMEDY	PAGE REF.
4. The mix in the hopper is too warm.	a. Hopper cover is not in position.	a. Clean and sanitize hopper cover and place in position.	28
	b. The hopper temperature is out of adjustment.	b. Call an authorized service technician.	- - -
5. The mix in the hopper is too cold.	a. The hopper temperature is out of adjustment.	a. Call an authorized service technician.	- - -
6. Mix Low and Mix Out probes are not functioning.	a. Milkstone build-up in the hopper.	a. Clean hoppers thoroughly.	31
7. Product is collecting on top of the freezer door.	a. The top o-ring on draw valve is improperly lubricated or worn.	a. Lubricate properly or replace the o-ring.	25
8. Excessive mix leakage from the bottom of door spout.	a. Bottom o-ring on draw valve is improperly lubricated or worn.	a. Lubricate properly or replace the o-ring.	25
9. Excessive mix leakage into the long drip pan.	a. The seal on drive shaft is improperly lubricated or worn.	a. Lubricate properly or replace the seal.	22
	b. The seal is installed inside-out on the drive shaft.	b. Install correctly.	22
	c. Inadequate lubrication of the drive shaft.	c. Lubricate properly.	22
	d. The drive shaft and beater assembly work forward.	d. Call an authorized service technician.	- - -
	e. Worn rear shell bearing.	e. Call an authorized service technician.	- - -
	f. Gear box out of alignment.	f. Call an authorized service technician.	- - -
10. The drive shaft is stuck in the drive coupling.	a. Mix and lubricant collected in drive coupling.	a. Brush clean the rear shell bearing area regularly.	31
	b. Rounded corners of drive shaft, drive coupling, or both.	b. Call an authorized service technician.	- - -
	c. Gear box is out of alignment.	c. Call an authorized service technician.	- - -

PROBLEM	PROBABLE CAUSE	REMEDY	PAGE REF.
11. The freezing cylinder walls are scored.	a. Missing or worn front bearing.	a. Install or replace the front bearing.	23
	b. Broken freezer door baffle rod.	b. Replace freezer door.	24
	c. Beater assembly is bent.	c. Replace beater assembly.	24
	d. Gear box is out of alignment.	d. Call an authorized service technician.	- - -
12. The product makes a popping sound when drawn.	a. Draw rate is set too fast.	a. Adjust draw rate of 5 to 7 1/2 oz. (142 g. to 213 g.) of product by weight in 10 seconds.	26
	b. Freezing cylinder not primed correctly.	b. Drain the freezing cylinder and reprime the machine.	28
13. No control panel functions with power switch ON.	a. Machine is unplugged.	a. Plug into wall receptacle.	- - -
	b. Circuit breaker OFF or blown fuse.	b. Turn the breaker ON or replace the fuse.	- - -

Section 9 Parts Replacement Schedule

PART DESCRIPTION	EVERY 3 MONTHS	EVERY 6 MONTHS	ANNUALLY
Scraper Blade	X		
Drive Shaft Seal	X		
Freezer Door Gasket	X		
Front Bearing	X		
Draw Valve O-Ring	X		
Draw Valve Seal	X		
Prime Plug O-Ring	X		
Mix Feed Tube O-Ring	X		
Design Cap	X		
White Bristle Brush, 3” x 7”		Inspect & Replace if Necessary	Minimum
White Bristle Brush, 1” x 2”		Inspect & Replace if Necessary	Minimum
Black Bristle Brush, 1” x 2”		Inspect & Replace if Necessary	Minimum
Double-Ended Brush		Inspect & Replace if Necessary	Minimum

Section 10 Limited Warranty on Equipment

TAYLOR COMPANY LIMITED WARRANTY ON FREEZERS

Taylor Company, a division of Carrier Commercial Refrigeration, Inc. (“Taylor”) is pleased to provide this limited warranty on new Taylor-branded freezer equipment available from Taylor to the market generally (the “Product”) to the original purchaser only.

LIMITED WARRANTY

Taylor warrants the Product against failure due to defect in materials or workmanship under normal use and service as follows. All warranty periods begin on the date of original Product installation. If a part fails due to defect during the applicable warranty period, Taylor, through an authorized Taylor distributor or service agency, will provide a new or re-manufactured part, at Taylor’s option, to replace the failed defective part at no charge for the part. Except as otherwise stated herein, these are Taylor’s exclusive obligations under this limited warranty for a Product failure. This limited warranty is subject to all provisions, conditions, limitations and exclusions listed below and on the reverse (if any) of this document.

Product	Part	Limited Warranty Period
Soft Serve	Insulated shell assembly	Five (5) years
Frozen Yogurt **Shakes**	Refrigeration compressor (except service valve)	Five (5) years
Smoothies	Beater motors	Two (2) years
Frozen Beverage	Beater drive gear	Two (2) years
Batch Desserts	Printed circuit boards and Softech controls beginning with serial number H8024200	Two (2) years
	Parts not otherwise listed in this table or excluded below	One (1) year

LIMITED WARRANTY CONDITIONS

1. If the date of original installation of the Product cannot be verified, then the limited warranty period begins ninety (90) days from the date of Product manufacture (as indicated by the Product serial number). Proof of purchase may be required at time of service.
2. This limited warranty is valid only if the Product is installed and all required service work on the Product is performed by an authorized Taylor distributor or service agency, and only if genuine, new Taylor parts are used.
3. Installation, use, care, and maintenance must be normal and in accordance with all instructions contained in the Taylor Operator’s Manual.
4. Defective parts must be returned to the authorized Taylor distributor or service agency for credit.
5. The use of any refrigerant other than that specified on the Product’s data label will void this limited warranty.

LIMITED WARRANTY EXCEPTIONS

This limited warranty does **not** cover:

1. Labor or other costs incurred for diagnosing, repairing, removing, installing, shipping, servicing or handling of defective parts, replacement parts, or new Products.
2. Normal maintenance, cleaning and lubrication as outlined in the Taylor Operator’s Manual, including cleaning of condensers.

131121

3. Replacement of wear items designated as Class “000” parts in the Taylor Operator’s Manual.
4. External hoses, electrical power supplies, and machine grounding.
5. Parts not supplied or designated by Taylor, or damages resulting from their use.
6. Return trips or waiting time required because a service technician is prevented from beginning warranty service work promptly upon arrival.
7. Failure, damage or repairs due to faulty installation, misapplication, abuse, no or improper servicing, unauthorized alteration or improper operation or use as indicated in the Taylor Operator’s Manual, including but not limited to the failure to use proper assembly and cleaning techniques, tools, or approved cleaning supplies.
8. Failure, damage or repairs due to theft, vandalism, wind, rain, flood, high water, water, lightning, earthquake or any other natural disaster, fire, corrosive environments, insect or rodent infestation, or other casualty, accident or condition beyond the reasonable control of Taylor; operation above or below the electrical or water supply specification of the Product; or components repaired or altered in any way so as, in the judgment of the Manufacturer, to adversely affect performance, or normal wear or deterioration.
9. Any Product purchased over the Internet.
10. Failure to start due to voltage conditions, blown fuses, open circuit breakers, or damages due to the inadequacy or interruption of electrical service.
11. Electricity or fuel costs, or increases in electricity or fuel costs from any reason whatsoever.
12. Damages resulting from the use of any refrigerant other than that specified on the Product’s data label will void this limited warranty.
13. Any cost to replace, refill or dispose of refrigerant, including the cost of refrigerant.
14. **ANY SPECIAL, INDIRECT OR CONSEQUENTIAL PROPERTY OR COMMERCIAL DAMAGE OF ANY NATURE WHATSOEVER.** Some jurisdictions do not allow the exclusion of incidental or consequential damages, so this limitation may not apply to you.

This limited warranty gives you specific legal rights, and you may also have other rights which vary from jurisdiction to jurisdiction.

LIMITATION OF WARRANTY

THIS LIMITED WARRANTY IS EXCLUSIVE AND IS IN LIEU OF ALL OTHER WARRANTIES, CONDITIONS AND/OR REMEDIES UNDER THE LAW, INCLUDING ANY IMPLIED WARRANTIES OR CONDITIONS OF MERCHANTABILITY OR FITNESS FOR A PARTICULAR PURPOSE. THE ORIGINAL OWNER'S SOLE REMEDY WITH RESPECT TO ANY PRODUCTS SHALL BE REPAIR OR REPLACEMENT OF DEFECTIVE COMPONENTS UNDER THE TERMS OF THIS LIMITED WARRANTY. ALL RIGHTS TO CONSEQUENTIAL OR INCIDENTAL DAMAGES (INCLUDING CLAIMS FOR LOST SALES, LOST PROFITS, PRODUCT LOSS, PROPERTY DAMAGES OR SERVICE EXPENSES) ARE EXPRESSLY EXCLUDED. THE EXPRESS WARRANTIES MADE IN THIS LIMITED WARRANTY MAY NOT BE ALTERED, ENLARGED, OR CHANGED BY ANY DISTRIBUTOR, DEALER, OR OTHER PERSON, WHATSOEVER.

LEGAL REMEDIES

The owner **must** notify Taylor in writing, by certified or registered letter to the following address, of any defect or complaint with the Product, stating the defect or complaint and a specific request for repair, replacement, or other correction of the Product under warranty, mailed at least thirty (30) days before pursuing any legal rights or remedies.

Taylor Company
a division of Carrier Commercial Refrigeration, Inc.
750 N. Blackhawk Blvd.
Rockton, IL 61072

Section 11 Limited Warranty on Parts

TAYLOR COMPANY LIMITED WARRANTY ON TAYLOR GENUINE PARTS

Taylor Company, a division of Carrier Commercial Refrigeration, Inc. (“Taylor”) is pleased to provide this limited warranty on new Taylor genuine replacement components and parts available from Taylor to the market generally (the “Parts”) to the original purchaser only.

LIMITED WARRANTY

Taylor warrants the Parts against failure due to defect in materials or workmanship under normal use and service as follows. All warranty periods begin on the date of original installation of the Part in the Taylor unit. If a Part fails due to defect during the applicable warranty period, Taylor, through an authorized Taylor distributor or service agency, will provide a new or re-manufactured Part, at Taylor’s option, to replace the failed defective Part at no charge for the Part. Except as otherwise stated herein, these are Taylor’s exclusive obligations under this limited warranty for a Part failure. This limited warranty is subject to all provisions, conditions, limitations and exclusions listed below and on the reverse (if any) of this document.

Part's Warranty Class Code or Part	Limited Warranty Period
Class 103 Parts[1]	Three (3) months
Class 212 Parts[2]	Twelve (12) months
Class 512 Parts	Twelve (12) months
Class 000 Parts	No warranty
Taylor Part #072454 (Motor-24VDC *C832/C842*)	Four (4) years

LIMITED WARRANTY CONDITIONS

1. If the date of original installation of the Part cannot be otherwise verified, proof of purchase may be required at time of service.
2. This limited warranty is valid only if the Part is installed and all required service work in connection with the Part is performed by an authorized Taylor distributor or service agency.
3. The limited warranty applies only to Parts remaining in use by their original owner at their original installation location in the unit of original installation.
4. Installation, use, care, and maintenance must be normal and in accordance with all instructions contained in the Taylor Operator’s Manual.
5. Defective Parts must be returned to the authorized Taylor distributor or service agency for credit.
6. This warranty is not intended to shorten the length of any warranty coverage provided pursuant to a separate Taylor Limited Warranty on freezer or grill equipment.
7. The use of any refrigerant other than that specified for the unit in which the Part is installed will void this limited warranty.

[1, 2] Except that Taylor Part #032129SER2 (Compressor-Air-230V SERV) and Taylor Part #075506SER1 (Compressor-Air-115V 60HZ) shall have a limited warranty period of twelve (12) months when used in Taylor freezer equipment and a limited warranty period of two (2) years when used in Taylor grill equipment.

131121

LIMITED WARRANTY EXCEPTIONS

This limited warranty does **not** cover:

1. Labor or other costs incurred for diagnosing, repairing, removing, installing, shipping, servicing or handling of defective Parts, replacement Parts, or new Parts.
2. Normal maintenance, cleaning and lubrication as outlined in the Taylor Operator's Manual, including cleaning of condensers or carbon and grease buildup.
3. Required service, whether cleaning or general repairs, to return the cooking surface assemblies, including the upper platen and lower plate, to an operational condition to achieve proper cooking or allow proper assembly of release sheets and clips as a result of grease build-up on the cooking surfaces, including but not limited to the platen and plate, sides of the shroud or top of the shroud.
4. Replacement of cooking surfaces, including the upper platen and lower plate, due to pitting or corrosion (or in the case of the upper platen, due to loss of plating) as a result of damage due to the impact of spatulas or other small wares used during the cooking process or as a result of the use of cleaners, cleaning materials or cleaning processes not approved for use by Taylor.
5. Replacement of wear items designated as Class "000" Parts in the Taylor Operator's Manual, as well as any release sheets and clips for the Product's upper platen assembly.
6. External hoses, electrical power supplies, and machine grounding.
7. Parts not supplied or designated by Taylor, or damages resulting from their use.
8. Return trips or waiting time required because a service technician is prevented from beginning warranty service work promptly upon arrival.
9. Failure, damage or repairs due to faulty installation, misapplication, abuse, no or improper servicing, unauthorized alteration or improper operation or use as indicated in the Taylor Operator's Manual, including but not limited to the failure to use proper assembly and cleaning techniques, tools, or approved cleaning supplies.
10. Failure, damage or repairs due to theft, vandalism, wind, rain, flood, high water, water, lightning, earthquake or any other natural disaster, fire, corrosive environments, insect or rodent infestation, or other casualty, accident or condition beyond the reasonable control of Taylor; operation above or below the gas, electrical or water supply specification of the unit in which a part is installed; or Parts or the units in which they are installed repaired or altered in any way so as, in the judgment of Taylor, to adversely affect performance, or normal wear or deterioration.
11. Any Part purchased over the Internet.
12. Failure to start due to voltage conditions, blown fuses, open circuit breakers, or damages due to the inadequacy or interruption of electrical service.
13. Electricity, gas or other fuel costs, or increases in electricity or fuel costs from any reason whatsoever.
14. Damages resulting from the use of any refrigerant other than that specified for the unit in which the Part is installed will void this limited warranty.
15. Any cost to replace, refill or dispose of refrigerant, including the cost of refrigerant.
16. **ANY SPECIAL, INDIRECT OR CONSEQUENTIAL PROPERTY OR COMMERCIAL DAMAGE OF ANY NATURE WHATSOEVER.** Some jurisdictions do not allow the exclusion of incidental or consequential damages, so this limitation may not apply to you.

This limited warranty gives you specific legal rights, and you may also have other rights which vary from jurisdiction to jurisdiction.

LIMITATION OF WARRANTY

THIS LIMITED WARRANTY IS EXCLUSIVE AND IS IN LIEU OF ALL OTHER WARRANTIES, CONDITIONS AND/OR REMEDIES UNDER THE LAW, INCLUDING ANY IMPLIED WARRANTIES OR CONDITIONS OF MERCHANTABILITY OR FITNESS FOR A PARTICULAR PURPOSE. THE ORIGINAL OWNER'S SOLE REMEDY WITH RESPECT TO ANY PRODUCTS SHALL BE REPAIR OR REPLACEMENT OF DEFECTIVE PARTS UNDER THE TERMS OF THIS LIMITED WARRANTY. ALL RIGHTS TO CONSEQUENTIAL OR INCIDENTAL DAMAGES (INCLUDING CLAIMS FOR LOST SALES, LOST PROFITS, PRODUCT LOSS, PROPERTY DAMAGES OR SERVICE EXPENSES) ARE EXPRESSLY EXCLUDED. THE EXPRESS WARRANTIES MADE IN THIS LIMITED WARRANTY MAY NOT BE ALTERED, ENLARGED, OR CHANGED BY ANY DISTRIBUTOR, DEALER, OR OTHER PERSON, WHATSOEVER.

LEGAL REMEDIES

The owner **must** notify Taylor in writing, by certified or registered letter to the following address, of any defect or complaint with the Part, stating the defect or complaint and a specific request for repair, replacement, or other correction of the Part under warranty, mailed at least thirty (30) days before pursuing any legal rights or remedies.

Taylor Company
a division of Carrier Commercial Refrigeration, Inc.
750 N. Blackhawk Blvd.
Rockton, IL 61072

DESCRIPTION	PART NUMBER	C713 QTY.	WARR. CLASS	REMARKS
ACTUATOR A.-DRAW SWITCH	X62401	1	103	
ARM-SWITCH-DRAW-L	038649	1	103	
ARM-SWITCH-DRAW-R	038650	1	103	
BRACKET A.-SPRING RETURN	X38257	1	103	
E-RING 1/4	032190	4	000	
PIN-PIVOT-DRAW SWITCH	038484	1	103	
ROD-SPRING RETAINER	038254	1	103	
SPRING-EXTENSION.375X.045X1.00	038922	2	103	
SPRING-RETURN-LEFT-TWIN TWIST	038923	1	103	
SPRING-RETURN-RIGHT-TWIN TWIST	038924	1	103	
BEARING-REAR SHELL-NICKEL	031324	2	000	
+NUT-BRASS BEARING	028991	2	000	
+GUIDE-DRIP SEAL	028992	2	000	
+WASHER-BEARING LOCK	012864	2	000	
BEATER A.-3.4QT-HELICORE	X31761	2	103	
BLADE-SCRAPER-PLASTIC 17L	035174	4	000	
BELT-AX31	041575	4	000	220-240V 50HZ 1PH
BLOWER A.	X53725-27	1	103	
CAPACITOR-RUN 7.5UF/370V	034749	1	103	
CLIP-SCREEN-BLOWER	053730	4	103	
MOTOR-FAN 208-230V 50/60 HZ	053481-27	1	103	
SCREEN-BLOWER	053729	1	103	
WHEEL-BLOWER	053726	1	103	
BOOT-VALVE-EXPANSION	050900	2	000	
BRUSH-DBL END-PUMP & FEED TUBE	013072	1	000	
BRUSH-DRAW VALVE 1"OD X 2"X17"	013073	1	000	
BRUSH-END-DOOR-SPOUT-SS-HT	039719	1	000	
BRUSH-MIX PUMP BODY-3" X 7" WH	023316	1	000	
BRUSH-PUMP SPOUT *MC13*	054068	1	000	
BRUSH-REAR BRG 1"D X 2"LG X 14	013071	1	000	
BRUSH-SET LVB	050103	1	000	

DESCRIPTION	PART NUMBER	C713 QTY.	WARR. CLASS	REMARKS
CABLE-RIBBON-20C-17"L-DIL/DILR	040040-013	1	103	
CABLE-RIBBON-50C-25"L.DIL/DIL	040040-025	1	103	
CABLE-RIBBON-20C-14"L-DIL/DIL	040040-040	2	103	
CABLE-RIBBON-50C-10"L-DIL/DIL	040040-058	1	103	
CABLE-USB	056785	1	103	
CAP-DESIGN 1.010"ID-6 POINT	014218	3	000	
CASTER-4" SWV 3/4-10 STM	044106	4	103	
COMPRESSOR TL3G-R134A	047701-27	1	512	AUX
+RELAY-START-COMPRESSOR-TL3G	047702-27	1	103	AUX
+CAPACITOR-START 60UF-220/275V	047703	1	103	AUX
+KIT-MOUNTING-COMPRESSOR	047704	1	000	AUX
COMPRESSOR CS17K6E-PFV-238	052397-27E	2	512	208-230V 60HZ 1PH
+BLOCK-TERMINAL 2P L1,L2	039422	2	103	
+CAPACITOR-RUN 35UF/440V	048132	2	103	
+CAPACITOR-START 189-227UF/250V	053106	2	103	
+RELAY-START-COMPRESSOR	051957-27	2	103	
COMPRESSOR CS18K6E-TF5-238	052397-33	2	512	208-230V 60HZ 3PH
COMPRESSOR CS18K6E-PFJ-238	052397-40	2	512	220-240V 50HZ 1PH
+BLOCK-TERMINAL 2P L1,N	039421	2	103	
+CAPACITOR-START 145-175UF/25	052399	2	103	
+CAPACITOR-RUN 45UF/370V	052400	2	103	
+RELAY-START-COMPRESSOR	052401-27	2	103	
COMPRESSOR CS18K6E-TFD-238	052397-58	2	512	380-415V 50HZ 3N
+BLOCK-TERMINAL 4P L1,L2,L3,N 2	039424	2	103	
CONDENSER-AC 7X6X1.25-2 ROW	027155	1	103	AUX
CONDENSER-AC 12LX18HX3.12T-5RW	055813-1	1	103	MAIN LEFT
CONDENSER-AC 12LX18HX3.12T-5RW	055813-2	1	103	MAIN RIGHT
CONTROL-UVC3 SURFACE MOUNT	062529-SER	1	212	
CORD-16-2 SPT-3	023767-40	1	NNN	BLOWER A.
CORE-SCHRADER VALVE-TEFLON	037047	4	103	FOR 053565 VLVS
COUPLING-DRIVE 3/4 HEX X 1-7/8	012721	2	103	
COVER-HOPPER *BLACK*	053809-1	2	103	

DESCRIPTION	PART NUMBER	C713 QTY.	WARR. CLASS	REMARKS
DECAL-DOOR-3 SPOUT-TWIN TWIST	062239	1	000	
DECAL-INST-CLN HPR	019029	1	000	
DECAL-TROUBLESHOOT	038374	1	000	
DEFLECTOR-BLOWER EXHAUST	047912	1	103	
DIAGRAM-WIRING *C713*	059899-27	1	000	208-230V 60HZ 1PH
DIAGRAM-WIRING *C713*	059899-33	1	000	208-230V 60HZ 3PH
DIAGRAM-WIRING *C713*	059899-40	1	000	220-240V 50HZ 1PH
DIAGRAM-WIRING *C713*	059899-58	1	000	380-415V 50HZ 3N
DOOR A.-3SPT*LG BAF*W/PRG	X59922-SER	1	103	
+BEARING-FRONT	050216	2	000	
+DECAL-DOOR-3 SPOUT-TWIN TWIST	062239	1	NNN	
+GASKET-DOOR-4"-DART	048926-1	2	000	
+HANDLE A.-DRAW *C602*	X56421-1	3	103	
+O-RING-1/4 OD X .070W 50 DURO	015872	3	000	
+SCREW-ADJUSTMENT-5/16-24 *602*	056332	3	103	
+PIN-HANDLE-TWIN *C712/C717*	059894	1	103	
+PLUG-PRIME TWIN *C712/C713*	059936	2	103	
+O-RING-1/2OD X .070W	024278	4	000	
+VALVE A.-DRAW *C712/C713*	X59843	2	103	
+O-RING-7/8 OD X .103W	014402	4	000	
+VALVE A.-DRAW-CENTER	X62218	1	103	
+O-RING-7/8 OD X .103W	014402	1	000	
+SEAL-DRAW VALVE	034698	1	000	
DRYER-CAP. TUBE .026ID X 13FT	047699	1	000	AUX
DRYER-FILTER-HP62-3/8 X 1/4S	048901	2	000	
DVD-OPS TRAIN VIDEO*C712/C713*	064417-DVD	1	000	
EYELET-RESET BUTTON	013739	4	103	
FASTENER-CLIP 1/4-20 U-TYPE	045865	12	000	PANELS, CNTR BX
FASTENER-DOOR LATCH	030787	2	000	DOOR LATCH FAST
FASTENER-DOOR STRIKE	030788	2	000	DOOR LATCH FAST
FILTER-CORCOM 6EH1	040140-001	1	103	
FILTER-AIR-POLY-FLO	052779-11	2	000	

DESCRIPTION	PART NUMBER	C713 QTY.	WARR. CLASS	REMARKS
GEAR A.*REDUCER 4.21:1	021286-SER	2	212	
GUARD-POWER SWITCH	034830	1	103	
GUIDE A.-DRIP PAN-CENTER	X59913	1	103	
GUIDE A.-DRIP PAN-LEFT	X59910	1	103	
GUIDE A.-DRIP PAN-RIGHT	X59911	1	103	
HARNESS-WIRE-BEATER MOTOR-1PH	062053-27G	2	103	208-230V 60HZ 1PH
HARNESS-WIRE-BEATER MTR-3 PH	062053-33G	2	103	208-230V 60HZ 3PH
HARNESS-WIRE-COMPRESSOR	062056-33G	2	103	208-230V 60HZ 3PH
HARNESS-WIRE-BEATER MTR-3 PH	062053-33G	2	103	380-415V 50HZ 3N
HARNESS-WIRE-COMPRESSOR	062056-33G	2	103	380-415V 50HZ 3N
HARNESS-WIRE-BLOWER C712/C713	062057	1	103	
HARNESS-WIRE-LW V-CNTL CHNNL	062049	1	103	
HARNESS-WIRE-LW V-MIX HOPPER	062050	1	103	
HARNESS-WIRE-POWER SWITCH	062051	1	103	
HINGE A.-MOTOR *632-8756* ALT	X25736	2	103	
JACK A.-FLAVORBURST *C706*	X56353	2	103	
KIT A.-TUNE UP-3 SPT C713	X49463-80	1	000	
CAP-DESIGN 1.010"ID-6 POINT	014218	3	000	
O-RING-7/8 OD X .103W	014402	6	000	
O-RING-.643 OD X .077W	018572	8	000	
O-RING-1/2OD X .070W	024278	4	000	
SEAL-DRIVE SHAFT	032560	2	000	
SEAL-DRAW VALVE	034698	1	000	
TOOL-O-RING REMOVAL-FREEZER	048260-WHT	1	000	
GASKET-DOOR-4"-DART	048926-1	2	000	
BEARING-FRONT	050216	2	000	
KIT-MOUNTING-COMPRESSOR CS	052197	2	000	
LABEL-SW-POWER-OFF/ON-SYMBOLS	052632	1	000	
LUBRICANT-TAYLOR 4 OZ.	047518	1	000	
MANIFOLD-1/2S THRU-1/4S OUT-2	046687	2	NNN	LINE DISCHARGE
MAN-OPER C713	062180-M	1	000	
MOTOR-1.5 HP CAPS@10&2 O'CLOCK	021522-27	2	212	208-230V 60HZ 1PH

DESCRIPTION	PART NUMBER	C713 QTY.	WARR. CLASS	REMARKS
MOTOR-1.5 HP	021522-33	2	212	208-230V 60HZ 3PH
MOTOR-1.5 HP CAPS@10&2 O'CLOCK	021522-34	2	212	220-240V 50HZ 1PH
MOTOR-1.5 HP	021522-35	2	212	380-415V 50HZ 3N
MOTOR-FAN	062253-27	1	103	AUX
NUT-STUD-BLACK 2.563 LONG	058764	2	103	
NUT-STUD-BLACK 3.250 LONG	058765	2	103	
ORIFICE	022465-100	2	103	
+O-RING-3/8 OD X .070W	016137	2	000	
PAIL-MIX 10 QT.	013163	1	000	
PAN-DRIP 12.5	059736	2	NNN	
PAN-DRIP 19-1/2 LONG	035034	1	103	
PANEL A.-FILTER-LOUVERED	X59928	2	103	
PANEL A.-FRONT *C712/C716*	X63879	1	103	MIDDLE FRONT UNDER NOSE CONE
PANEL A.-FRONT *C712-C717*	X59836	1	103	UPPER FRONT W/ NOSE CONE
PANEL A.-FRONT LOWER	X59854	1	103	
PANEL-CORNER-FRNT-R *C712/C717	063087	1	103	REPLACES 059882
PANEL-CORNER-FRNT-L*C712/C717*	063088	1	103	REPLACES 059882
PANEL-REAR *C713/C717*	059917	1	103	
PANEL-SIDE-LEFT *C712/C717*	059906	1	103	
PANEL-SIDE-RIGHT *C712/C717*	059907	1	103	
PCB A.-CONTROL *C713* UVC3 SM	X62291-SER	1	212	
CONTROL-UVC3 SURFACE MOUNT	059189-SER	1	212	
CHIP-SOFTWARE C713 UVC3SM	X40889	1	103	
PCB A.-INTERFACE-HOT GAS-C602	X59485-SER	2	212	
CHIP-SOFTWARE MIX LEVEL	X40799	2	103	
PCB A.-INTERFACE *C712-C717	X62101-SER	1	212	
CHIP-SOFTWARE *C602* FP	X40821	1	103	
PIN-HINGE CONTROL BOX	062042	2	103	
PIN-RETAINING-HOPPER COVER	043934	2	103	
PLATE-DEC *C713* SYRUP RAIL	062122	1	103	
PROBE A.-MIX	X56912	2	103	MIX LEVEL
+SPACER-PROBE-MIX-MIDDLE	056907	2	000	

DESCRIPTION	PART NUMBER	C713 QTY.	WARR. CLASS	REMARKS
+SPACER-PROBE-MIX-UPPER	056910	2	000	
PROBE-THERMISTOR-BARREL-2% TOL	038061-BLK	8	103	066644 CONTROL HARNESS - 20"PROBE W/90"LEADS
PULLEY-2AK22 X .625-.6265	016403	2	103	208-230V 60HZ 1PH / 208-230V 60HZ 3PH
PULLEY-2AK27 X .625-.6265	011545	2	103	220-240V 50HZ 1PH / 380-415V 50HZ 3N
PULLEY-2AK64-5/8 BORE	039695	2	103	380/415 50HZ 3N MTR
PULLEY-2AK74-5/8	027822	2	103	220-240V 50HZ 1PH/380-415V 50HZ 3N~ (4WIRE)
RELAY-3 POLE-20A-208/240 50/60	012725-33	2	103	
RELAY-DPDT 100UA TO 7A 1/8HP	052111-03	2	103	
SANITIZER KAY-5 25 PACKETS	041081	1	NNN	
SCREW-10-24X1/2 TAPTITE-TORX	002077	4	000	TRIM
SCREW-6-32X3/8 BIN.HD SLOT SS	002201	2	000	DEC PLATE
SCREW-5/16-18X2-1/2 HEX CAP	002498	8	000	B/M MOUNT
SCREW-10-32X3/8 RHM-ZP	002742	8	000	LOUVERS
SCREW-1/4-20X3/8 RHM-STNLS	011694	14	000	PANELS
SCREW-8X3/8 RD HD TYP B	013234	2	000	CORNER TRIM
SCREW-5/16-18X1-3/4 HEX CAP	019691	10	NNN	COMP L/R
SHAFT-BEATER	032564	2	103	
+SEAL-DRIVE SHAFT	032560	2	000	
SHELL A.-INSULATED *C713*	X63337-SER	1	512	
+STUD-NOSE CONE	055987	4	103	
SHIELD-SPLASH-WIRE-19-3/4 L	033813	1	103	
SOCKET-RELAY-FOR US W/052111	052112	2	103	
SPRING-COMP.970X.113X1.5	032967	4	103	
STARTER-1 PHASE-4.5 TO 7 A	041950-27K	2	103	
SWITCH A.-DUAL LEVER	X62400	1	103	
SWITCH-LEVER-SPDT-10A-125-250V	028889	4	103	
SCREW-4-40X1" TAPTITE PAN HD	045141	4	000	
BRACKET-SWITCH*C712*	062394	1	103	
ACTUATOR-TANDEM LEAF	062408	2	103	
SWITCH-PRESSURE 405 PSI-SOLDER	052663	2	103	LINE DISCHARGE
SWITCH-REED *DOOR INTERLOCK*	056249	1	103	
TOOL-O-RING REMOVAL-FREEZER	048260-WHT	1	000	

DESCRIPTION	PART NUMBER	C713 QTY.	WARR. CLASS	REMARKS
TRANS.-CONT.-32VA 120/200/240V	054834	1	103	
TRANS.-120/208/240V PRI 24VSEC	051660	1	103	
TRAY-DRIP-SHELF *C716*	063877	1	103	S/N K5127109 & UP
+NUT-10-32 NYLON INSERT LOCK	600144	2	000	
+SCREW-10-32X1/2 SLTD TRUSS	037734	2	000	
TRAY-DRIP *C712/C717*	059892	1	103	S/N K5115776 & PRIOR
TRAY-DRIP-19-5/8 L X 4-7/8	033812	1	103	
TRIM-CORNER-REAR-R	059896	1	103	
TRIM-CORNER-REAR-L	059897	1	103	
TUBE A.-FEED-SS-3/16 HOLE DIA	X29429-3	2	103	
+O-RING-.643 OD X .077W	018572	8	000	
VALVE-ACCESS-1/4 MFLX1/4 S-90	047016	1	103	DANFOSS ACCESS
VALVE-ACCESS 1/4FL X 1/4SOLDER	044404	1	103	LINE SUCTION DNFS
VALVE-ACCESS-1/4MFL X 3/8ODSDR	053565	4	103	LINE DISCHARGE / LINE ACCESS
VALVE-EPR 1/4S	022665	1	103	LINE SUCTION DNFS
VALVE-EXP-AUTO-1/4S X1/4 FPT	046365	2	103	
VALVE A.-AXV-L *C712,C713*	X63349	1	103	
DRYER-FILTER-HP62-3/8 X 1/4S	048901	1	000	
VALVE-SOLENOID 7/64ORF X 1/4S	043449-27	1	103	
VALVE A.-AXV-R *C712,C713*	X63350	1	103	
DRYER-FILTER-HP62-3/8 X 1/4S	048901	1	000	
VALVE-SOLENOID 7/64ORF X 1/4	043449-27	1	103	
VIDEO-TRAIN FILM-SS-HPR PUMP				SEE DVD

DESCRIPTION	PART NUMBER	C713 QTY.	WARR. CLASS	REMARKS
WATER COOLED				
BLOWER A. C712/C717	X62380-27G	1	103	
CONDENSER-WC-COAX	047540	2	103	
DEFLECTOR-BLOWER EXHAUST	047912	1	103	
GUARD-BLOWER	022505	1	103	
HOSE-RUBBER 1/2 ID X 7/8 OD	R50200	15	000	
OUTLET A.-TEE	X25900	1	103	
PANEL-SIDE-L. W/C *C712/C717	062160	1	103	
PANEL-SIDE-R. W/C *C712/C717	062161	1	103	
PLATE-CONDENSER W/C	062043	1	103	
TEE-3/8" PIPE WATER VALVE	032953	1	103	
VALVE-WATER 3/8 REG/HEAD PRESS	046686	2	103	

Model C713
059899-27
5/13

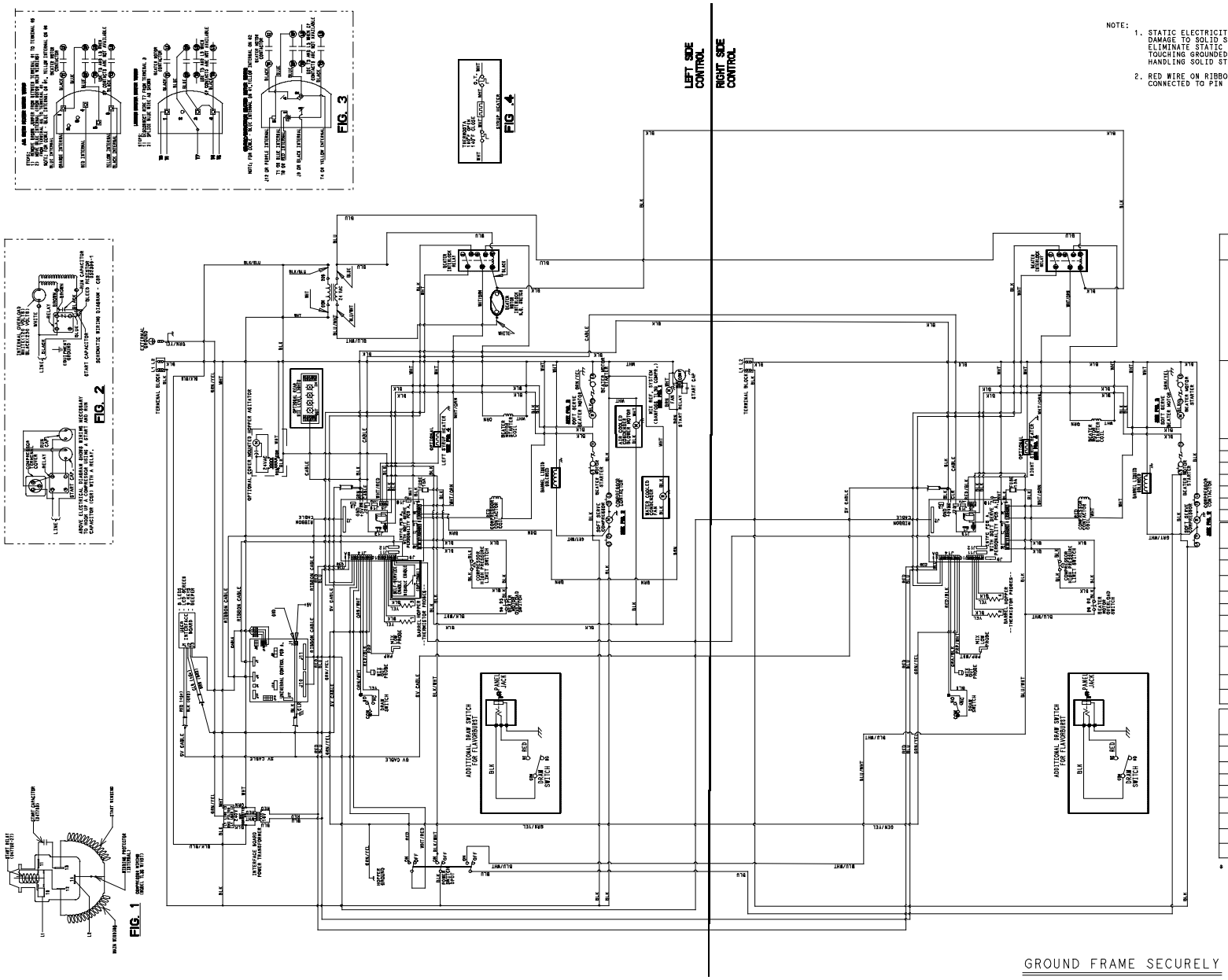

NOTE:

1. STATIC ELECTRICITY MAY CAUSE DAMAGE TO SOLID STATE COMPONENTS. ELIMINATE STATIC ELECTRICITY BY TOUCHING GROUNDED UNIT BEFORE HANDLING SOLID STATE COMPONENTS.
2. RED WIRE ON RIBBON CABLES MUST BE CONNECTED TO PIN 1 AT EACH END.

UVC4 BOARD		FUNCTION	JUMPER INSTALLED INITIALLY
JP1	PINS 1 AND 2	JUMPER INSTALLED - BARREL AND HOPPER TEMPERATURES ARE CHECKED DURING AUTO/STANDBY. UNIT IS LOCKED OUT IF EITHER BARREL OR HOPPER IS TOO WARM FOR A PERIOD OF TIME. LOCKOUT OCCURS WHEN BARREL OR HOPPER IS ABOVE 45F(7C) FOR MORE THAN ONE HOUR OR ABOVE 41F(5C) FOR MORE THAN FOUR HOURS.	YES
		NO JUMPER INSTALLED - NO LOCKOUT DURING AUTO/STANDBY IF BARREL OR HOPPER IS TOO WARM FOR A PERIOD OF TIME.	
	PINS 3 AND 4	RESERVED (DO NOT USE)	NO
JP2	PINS 1 AND 2	DOMESTIC CONFIGURATION - JUMPER INSTALLED. HOPPER TEMPERATURE NOT DISPLAYED ON SCREEN/HEAT SYMBOL KEYS ONLY ACTIVE WHEN A LOCKOUT CONDITION HAS OCCURRED/STANDBY KEYS DISABLED.	YES
		INTERNATIONAL CONFIGURATION - NO JUMPER INSTALLED. HOPPER TEMPERATURES DISPLAYED ON SCREEN/MANUAL HEAT CYCLE START BY SELECTING HEAT SYMBOL/STANDBY KEYS FUNCTIONAL.	
JP3		RESERVED (DO NOT USE)	NO
JP4		RESERVED (DO NOT USE)	NO
JP5		RESERVED (DO NOT USE)	NO
JP6		RESERVED (DO NOT USE)	NO
JP7		JUMPER INSTALLED DISABLES RESET.	NO
RTCK		RESERVED (DO NOT USE)	NO
DBGEN		RESERVED (DO NOT USE)	NO

LEFT INTERFACE BOARD		FUNCTION	JUMPER INSTALLED INITIALLY
M1		RESERVED (DO NOT USE)	NO
M2		JUMPER INSTALLED - FORCE BRUSH CLEAN STATUS.	NO
M3		JUMPER INSTALLED - ACTIVATES SYRUP HEATERS	NO*
M4		RESERVED (DO NOT USE)	NO
M5		RESERVED (DO NOT USE)	NO
M6		JUMPER INSTALLED - REDUCED MIX LOW SENSITIVITY.	NO
M7		JUMPER INSTALLED - REDUCED MIX OUT SENSITIVITY	NO
J10	PINS 7 & 8	JUMPER INSTALLED W/SWITCH - SELF SERVE APPLICATION ONLY. LOCKS OUT TOUCH PANEL. NEW SWITCH ACTS AS THE ON/OFF ABILITY TO ACTIVATE THE TOUCH PANEL.	NO
A	SOFT SERVE PERSONALITY BOARD	0-6 AMP BEATER MOTOR AMPERAGE RANGE	NO
B	SOFT SERVE PERSONALITY BOARD	0-12 AMP BEATER MOTOR AMPERAGE RANGE	YES

RIGHT INTERFACE BOARD		FUNCTION	JUMPER INSTALLED INITIALLY
M1		RESERVED (DO NOT USE)	NO
M2		JUMPER INSTALLED - ENABLES 59F HOPPER TEMPERATURE CHECK.	YES
M3		RESERVED (DO NOT USE)	NO
M4		RESERVED (DO NOT USE)	NO
M5		RESERVED (DO NOT USE)	NO
M6		JUMPER INSTALLED - REDUCED MIX LOW SENSITIVITY.	NO
M7		JUMPER INSTALLED - REDUCED MIX OUT SENSITIVITY.	NO
A	SOFT SERVE PERSONALITY BOARD	0-6 AMP BEATER MOTOR AMPERAGE RANGE	NO
B	SOFT SERVE PERSONALITY BOARD	0-12 AMP BEATER MOTOR AMPERAGE RANGE	YES

* IF THE UNIT HAS THE INTEGRAL SYRUP OPTION-405, THEN THIS JUMPER SHOULD BE INSTALLED.

Model C713
059899-33
5/13

NOTE:

1. STATIC ELECTRICITY MAY CAUSE DAMAGE TO SOLID STATE COMPONENTS. ELIMINATE STATIC ELECTRICITY BY TOUCHING GROUNDED UNIT BEFORE HANDLING SOLID STATE COMPONENTS.
2. RED WIRE ON RIBBON CABLES MUST BE CONNECTED TO PIN 1 AT EACH END.

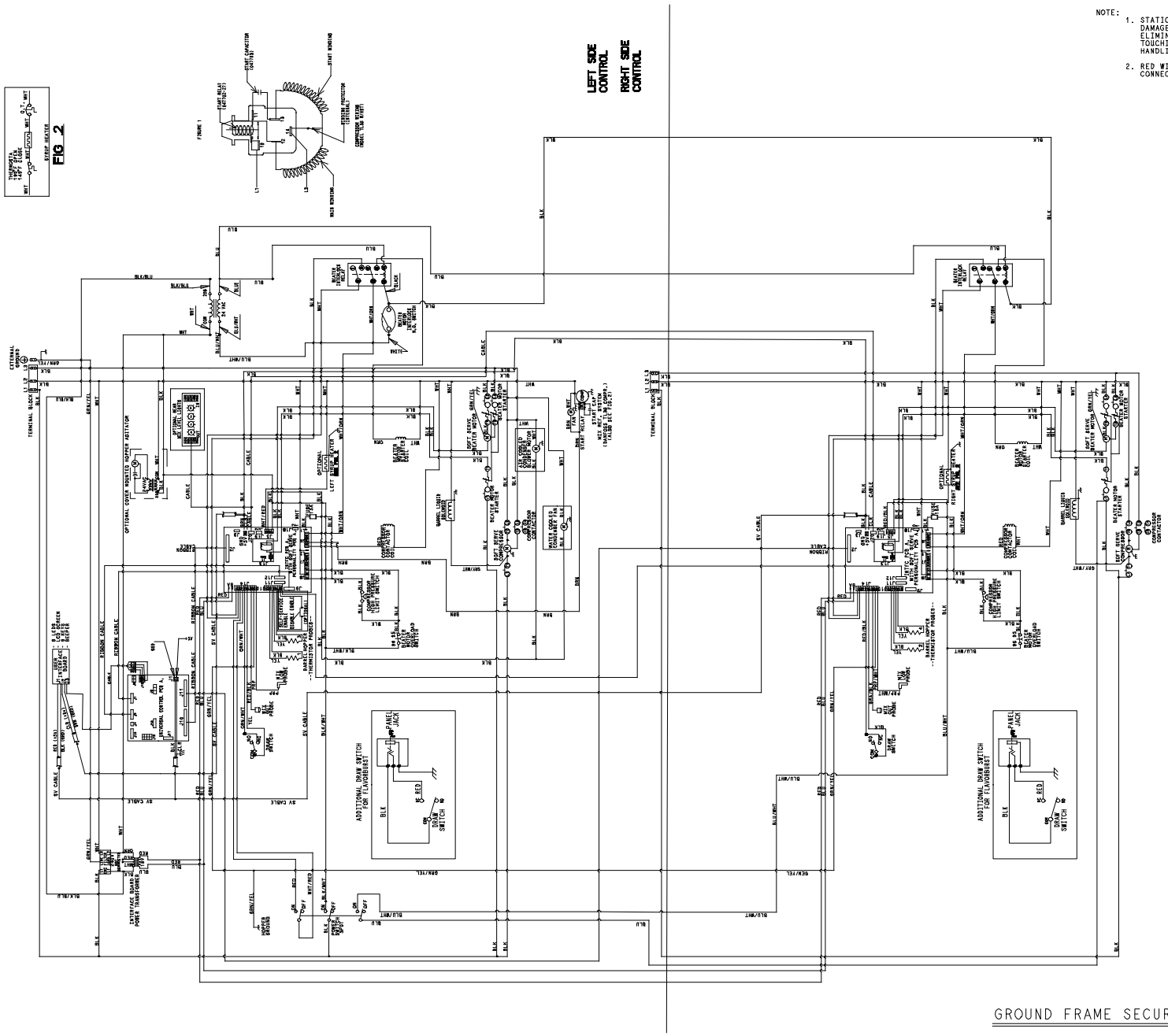

UVC4 BOARD		FUNCTION	JUMPER INSTALLED INITIALLY
JP1	PINS 1 AND 2	JUMPER INSTALLED - BARREL AND HOPPER TEMPERATURES ARE CHECKED DURING AUTO/STANDBY. UNIT IS LOCKED OUT IF EITHER BARREL OR HOPPER IS TOO WARM FOR A PERIOD OF TIME. LOCKOUT OCCURS WHEN BARREL OR HOPPER IS ABOVE 45F(7C) FOR MORE THAN ONE HOUR OR ABOVE 41F(5C) FOR MORE THAN FOUR HOURS.	YES
		NO JUMPER INSTALLED - NO LOCKOUT DURING AUTO/STANDBY IF BARREL OR HOPPER IS TOO WARM FOR A PERIOD OF TIME.	
	PINS 3 AND 4	RESERVED (DO NOT USE)	NO
JP2	PINS 1 AND 2	DOMESTIC CONFIGURATION - JUMPER INSTALLED. HOPPER TEMPERATURE NOT DISPLAYED ON SCREEN/HEAT SYMBOL KEYS ONLY ACTIVE WHEN A LOCKOUT CONDITION HAS OCCURRED/STANDBY KEYS DISABLED.	YES
		INTERNATIONAL CONFIGURATION - NO JUMPER INSTALLED. HOPPER TEMPERATURES DISPLAYED ON SCREEN/MANUAL HEAT CYCLE START BY SELECTING HEAT SYMBOL/STANDBY KEYS FUNCTIONAL.	
JP3		RESERVED (DO NOT USE)	NO
JP4		RESERVED (DO NOT USE)	NO
JP5		RESERVED (DO NOT USE)	NO
JP6		RESERVED (DO NOT USE)	NO
JP7		JUMPER INSTALLED DISABLES RESET.	NO
RTCK		RESERVED (DO NOT USE)	NO
DBGEN		RESERVED (DO NOT USE)	NO

LEFT INTERFACE BOARD		FUNCTION	JUMPER INSTALLED INITIALLY
W1		RESERVED (DO NOT USE)	NO
W2		JUMPER INSTALLED - FORCE BRUSH CLEAN STATUS.	NO
W3		JUMPER INSTALLED - ACTIVATES SYRUP HEATERS	NO*
W4		RESERVED (DO NOT USE)	NO
W5		RESERVED (DO NOT USE)	NO
W6		JUMPER INSTALLED - REDUCED MIX LOW SENSITIVITY.	NO
W7		JUMPER INSTALLED - REDUCED MIX OUT SENSITIVITY.	NO
J10	PINS 7 & 8	JUMPER INSTALLED W/SWITCH - SELF SERVE APPLICATION ONLY. LOCKS OUT TOUCH PANEL. NEW SWITCH ACTS AS THE ON/OFF ABILITY TO ACTIVATE THE TOUCH PANEL.	NO
A	SOFT SERVE PERSONALITY BOARD	0-6 AMP BEATER MOTOR AMPERAGE RANGE	NO
B	SOFT SERVE PERSONALITY BOARD	0-12 AMP BEATER MOTOR AMPERAGE RANGE	YES

RIGHT INTERFACE BOARD		FUNCTION	JUMPER INSTALLED INITIALLY
M1		RESERVED (DO NOT USE)	NO
M2		JUMPER INSTALLED - ENABLES 59F HOPPER TEMPERATURE CHECK.	YES
M3		RESERVED (DO NOT USE)	NO
M4		RESERVED (DO NOT USE)	NO
M5		RESERVED (DO NOT USE)	NO
M6		JUMPER INSTALLED - REDUCED MIX LOW SENSITIVITY.	NO
M7		JUMPER INSTALLED - REDUCED MIX OUT SENSITIVITY.	NO
A	SOFT SERVE PERSONALITY BOARD	0-6 AMP BEATER MOTOR AMPERAGE RANGE	NO
B	SOFT SERVE PERSONALITY BOARD	0-12 AMP BEATER MOTOR AMPERAGE RANGE	YES

* IF THE UNIT HAS THE INTEGRAL SYRUP OPTION-405, THEN THIS JUMPER SHOULD BE INSTALLED.

Model C713
059899-40
5/13

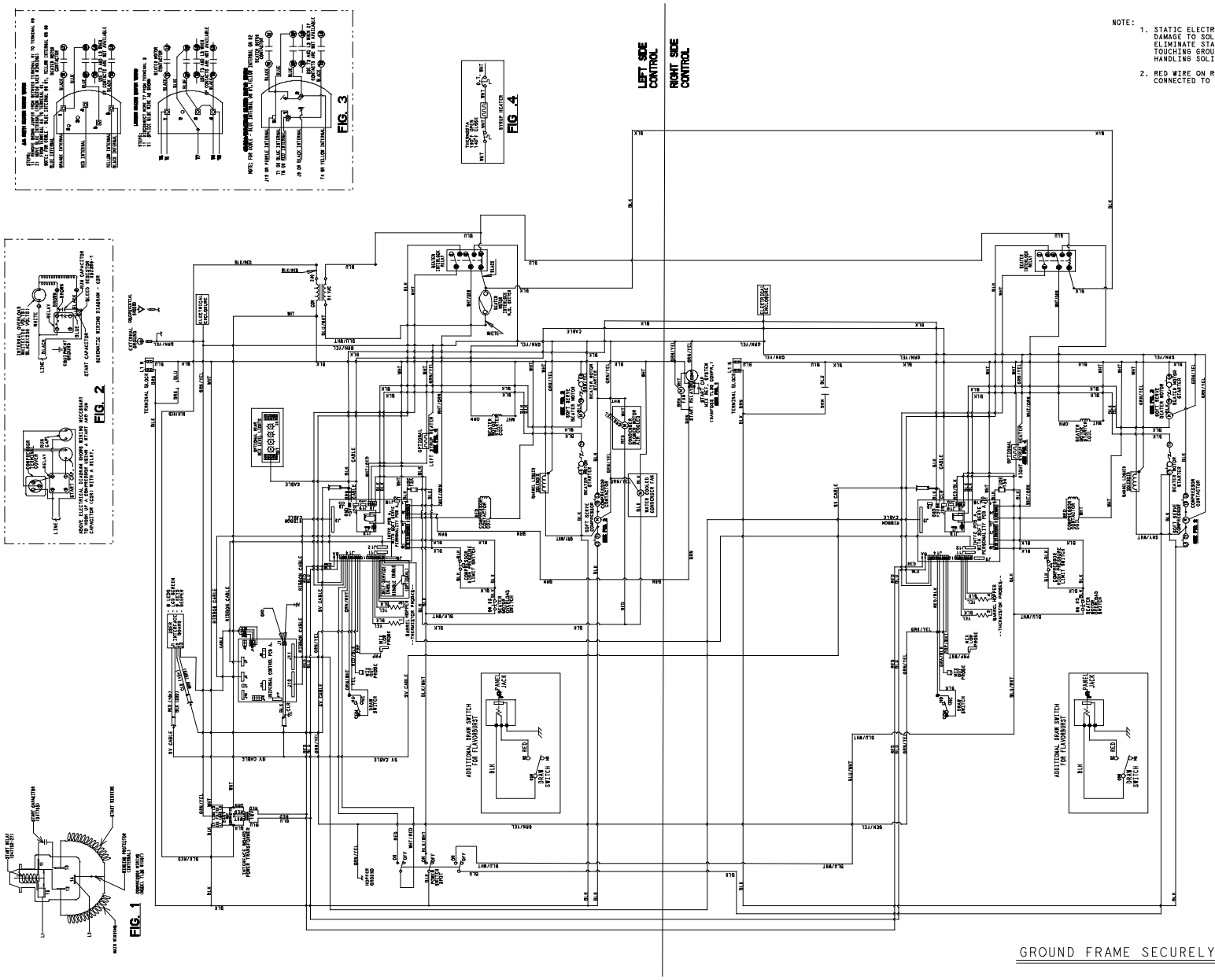

NOTE:

1. STATIC ELECTRICITY MAY CAUSE DAMAGE TO SOLID STATE COMPONENTS. ELIMINATE STATIC ELECTRICITY BY TOUCHING GROUNDED UNIT BEFORE HANDLING SOLID STATE COMPONENTS.
2. RED WIRE ON RIBBON CABLES MUST BE CONNECTED TO PIN 1 AT EACH END.

UVC4 BOARD		FUNCTION	JUMPER INSTALLED INITIALLY
JP1	PINS 1 AND 2	JUMPER INSTALLED - BARREL AND HOPPER TEMPERATURES ARE CHECKED DURING AUTO/STANDBY. UNIT IS LOCKED OUT IF EITHER BARREL OR HOPPER IS TOO WARM FOR A PERIOD OF TIME. LOCKOUT OCCURS WHEN BARREL OR HOPPER IS ABOVE 45F(7C) FOR MORE THAN ONE HOUR OR ABOVE 41F(5C) FOR MORE THAN FOUR HOURS.	YES
		NO JUMPER INSTALLED - NO LOCKOUT DURING AUTO/STANDBY IF BARREL OR HOPPER IS TOO WARM FOR A PERIOD OF TIME.	
	PINS 3 AND 4	RESERVED (DO NOT USE)	NO
JP2	PINS 1 AND 2	DOMESTIC CONFIGURATION - JUMPER INSTALLED. HOPPER TEMPERATURE NOT DISPLAYED ON SCREEN/HEAT SYMBOL KEYS ONLY ACTIVE WHEN A LOCKOUT CONDITION HAS OCCURRED/STANDBY KEYS DISABLED.	NO
		INTERNATIONAL CONFIGURATION - NO JUMPER INSTALLED. HOPPER TEMPERATURES DISPLAYED ON SCREEN/MANUAL HEAT CYCLE START BY SELECTING HEAT SYMBOL/STANDBY KEYS FUNCTIONAL.	
JP3		RESERVED (DO NOT USE)	NO
JP4		RESERVED (DO NOT USE)	NO
JP5		RESERVED (DO NOT USE)	NO
JP6		RESERVED (DO NOT USE)	NO
JP7		JUMPER INSTALLED DISABLES RESET.	NO
RTCK		RESERVED (DO NOT USE)	NO
DBGEN		RESERVED (DO NOT USE)	NO

LEFT INTERFACE BOARD		FUNCTION	JUMPER INSTALLED INITIALLY
M1		RESERVED (DO NOT USE)	NO
M2		JUMPER INSTALLED - FORCE BRUSH CLEAN STATUS.	NO
M3		JUMPER INSTALLED - ACTIVATES SYRUP HEATERS	NO*
M4		RESERVED (DO NOT USE)	NO
M5		RESERVED (DO NOT USE)	NO
M6		JUMPER INSTALLED - REDUCED MIX LOW SENSITIVITY.	NO
M7		JUMPER INSTALLED - REDUCED MIX OUT SENSITIVITY.	NO
J10	PINS 7 & 8	JUMPER INSTALLED W/SWITCH - SELF SERVE APPLICATION ONLY. LOCKS OUT TOUCH PANEL. NEW SWITCH ACTS AS THE ON/OFF ABILITY TO ACTIVATE THE TOUCH PANEL.	NO
A	SOFT SERVE PERSONALITY BOARD	0-6 AMP BEATER MOTOR AMPERAGE RANGE	NO
B	SOFT SERVE PERSONALITY BOARD	0-12 AMP BEATER MOTOR AMPERAGE RANGE	YES

RIGHT INTERFACE BOARD		FUNCTION	JUMPER INSTALLED INITIALLY
M1		RESERVED (DO NOT USE)	NO
M2		JUMPER INSTALLED - ENABLES 59F HOPPER TEMPERATURE CHECK.	YES
M3		RESERVED (DO NOT USE)	NO
M4		RESERVED (DO NOT USE)	NO
M5		RESERVED (DO NOT USE)	NO
M6		JUMPER INSTALLED - REDUCED MIX LOW SENSITIVITY.	NO
M7		JUMPER INSTALLED - REDUCED MIX OUT SENSITIVITY.	NO
A	SOFT SERVE PERSONALITY BOARD	0-6 AMP BEATER MOTOR AMPERAGE RANGE	NO
B	SOFT SERVE PERSONALITY BOARD	0-12 AMP BEATER MOTOR AMPERAGE RANGE	YES

* IF THE UNIT HAS THE INTEGRAL SYRUP OPTION-405, THEN THIS JUMPER SHOULD BE INSTALLED.

Model C713
059899-58
5/13

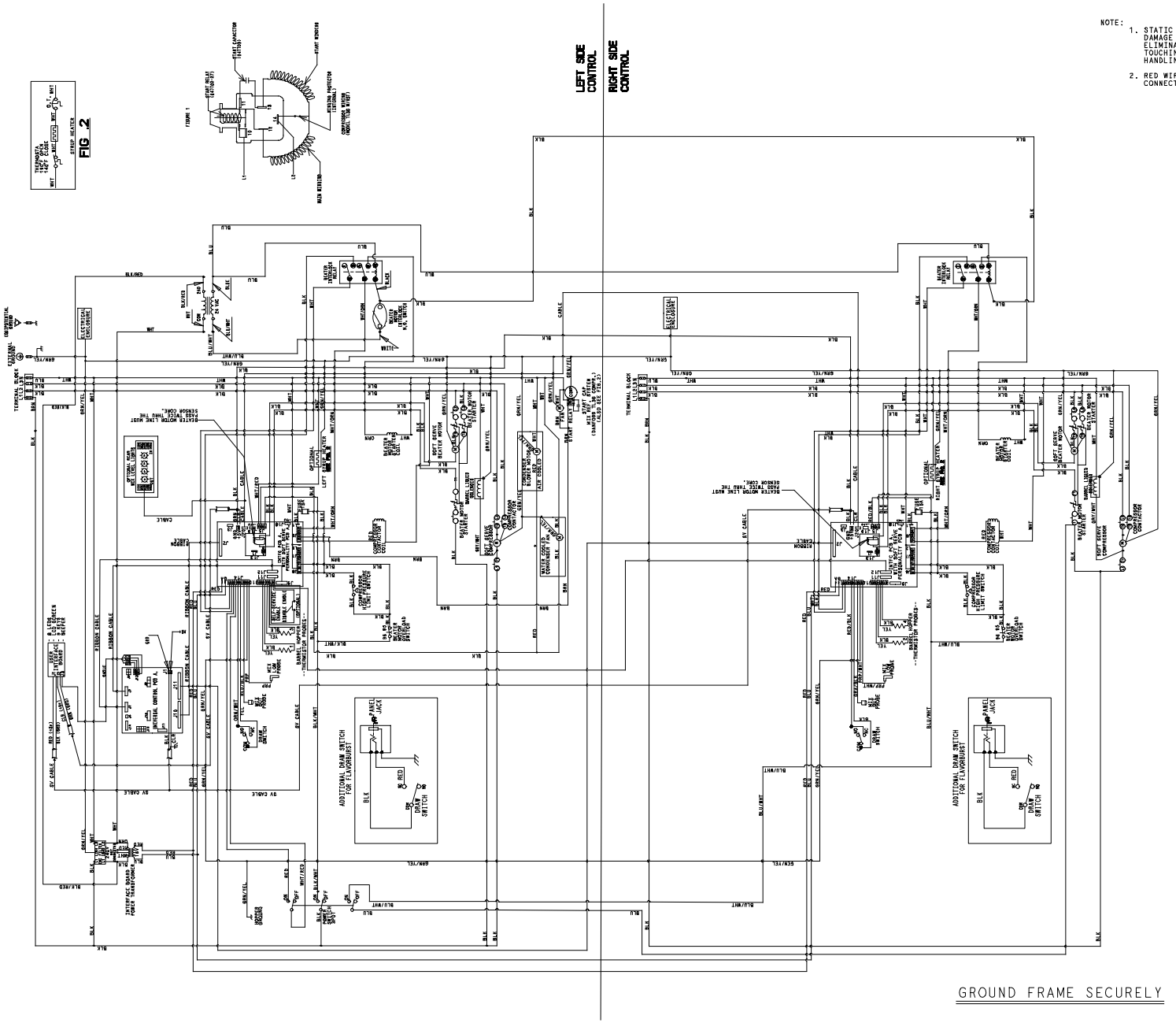

NOTE:

1. STATIC ELECTRICITY MAY CAUSE DAMAGE TO SOLID STATE COMPONENTS. ELIMINATE STATIC ELECTRICITY BY TOUCHING GROUNDED UNIT BEFORE HANDLING SOLID STATE COMPONENTS.
2. RED WIRE ON RIBBON CABLES MUST BE CONNECTED TO PIN 1 AT EACH END.

UVC4 BOARD		FUNCTION	JUMPER INSTALLED INITIALLY
JP1	PINS 1 AND 2	JUMPER INSTALLED - BARREL AND HOPPER TEMPERATURES ARE CHECKED DURING AUTO/STANDBY. UNIT IS LOCKED OUT IF EITHER BARREL OR HOPPER IS TOO WARM FOR A PERIOD OF TIME. LOCKOUT OCCURS WHEN BARREL OR HOPPER IS ABOVE 45F(7C) FOR MORE THAN ONE HOUR OR ABOVE 41F(5C) FOR MORE THAN FOUR HOURS.	YES
		NO JUMPER INSTALLED - NO LOCKOUT DURING AUTO/STANDBY IF BARREL OR HOPPER IS TOO WARM FOR A PERIOD OF TIME.	
	PINS 3 AND 4	RESERVED (DO NOT USE)	NO
JP2	PINS 1 AND 2	DOMESTIC CONFIGURATION - JUMPER INSTALLED. HOPPER TEMPERATURE NOT DISPLAYED ON SCREEN/HEAT SYMBOL KEYS ONLY ACTIVE WHEN A LOCKOUT CONDITION HAS OCCURRED/STANDBY KEYS DISABLED.	NO
		INTERNATIONAL CONFIGURATION - NO JUMPER INSTALLED. HOPPER TEMPERATURES DISPLAYED ON SCREEN/MANUAL HEAT CYCLE START BY SELECTING HEAT SYMBOL/STANDBY KEYS FUNCTIONAL.	
JP3		RESERVED (DO NOT USE)	NO
JP4		RESERVED (DO NOT USE)	NO
JP5		RESERVED (DO NOT USE)	NO
JP6		RESERVED (DO NOT USE)	NO
JP7		JUMPER INSTALLED DISABLES RESET.	NO
RTCK		RESERVED (DO NOT USE)	NO
DBGEN		RESERVED (DO NOT USE)	NO

LEFT INTERFACE BOARD		FUNCTION	JUMPER INSTALLED INITIALLY
W1		RESERVED (DO NOT USE)	NO
W2		JUMPER INSTALLED - FORCE BRUSH CLEAN STATUS.	NO
W3		JUMPER INSTALLED - ACTIVATES SYRUP HEATERS	NO*
W4		RESERVED (DO NOT USE)	NO
W5		RESERVED (DO NOT USE)	NO
W6		JUMPER INSTALLED - REDUCED MIX LOW SENSITIVITY.	NO
W7		JUMPER INSTALLED - REDUCED MIX OUT SENSITIVITY.	NO
J10	PINS 7 & 8	JUMPER INSTALLED W/SWITCH - SELF SERVE APPLICATION ONLY. LOCKS OUT TOUCH PANEL. NEW SWITCH ACTS AS THE ON/OFF ABILITY TO ACTIVATE THE TOUCH PANEL.	NO
A	SOFT SERVE PERSONALITY BOARD	0-6 AMP BEATER MOTOR AMPERAGE RANGE	NO
B	SOFT SERVE PERSONALITY BOARD	0-12 AMP BEATER MOTOR AMPERAGE RANGE	YES

RIGHT INTERFACE BOARD		FUNCTION	JUMPER INSTALLED INITIALLY
W1		RESERVED (DO NOT USE)	NO
W2		JUMPER INSTALLED - ENABLES 59F HOPPER TEMPERATURE CHECK.	YES
W3		RESERVED (DO NOT USE)	NO
W4		RESERVED (DO NOT USE)	NO
W5		RESERVED (DO NOT USE)	NO
W6		JUMPER INSTALLED - REDUCED MIX LOW SENSITIVITY.	NO
W7		JUMPER INSTALLED - REDUCED MIX OUT SENSITIVITY.	NO
A	SOFT SERVE PERSONALITY BOARD	0-6 AMP BEATER MOTOR AMPERAGE RANGE	NO
B	SOFT SERVE PERSONALITY BOARD	0-12 AMP BEATER MOTOR AMPERAGE RANGE	YES

* IF THE UNIT HAS THE INTEGRAL SYRUP OPTION-405, THEN THIS JUMPER SHOULD BE INSTALLED.