TAYLOR®

Item No. _____

152

Soft Serve Freezer

Single Flavor, Taylormate®

Features

Offer all the popular soft serve variations from low or non-fat ice creams to custards, yogurt and sorbet.

Freezing Cylinder
One, 1.5 quart (1.4 liter).

Mix Hopper
One, 8 quart (7.6 liter). Separate hopper refrigeration (SHR) maintains mix below 41ºF (5ºC) in Auto and Standby modes.

Indicator Lights
The Mix Low light alerts the operator to add mix.

Solid State Controls
Taylor Quality Control (TQC) precisely monitors viscosity to maintain consistent quality.

Standby
During long no-use periods, the standby feature maintains safe product temperatures in the mix hopper and freezing cylinder.

NSF Standard 6 | c UL us LISTED SA2650 | CE Selected 50 Hz. Models

Rockton, Illinois 61072
800-255-0626
Phone 815-624-8333 Fax 815-624-8000
www.taylor-company.com
e-mail: info@taylor-company.com

International Office
Taylor Company S.r.l.
Roma, Italy
Tel: **+39-06-420-12002** Fax: +39-06-420-12034
e-mail: romeoff@taylor-company.com

ISO 9001:2000
Registered Firm

152 Soft Serve Freezer

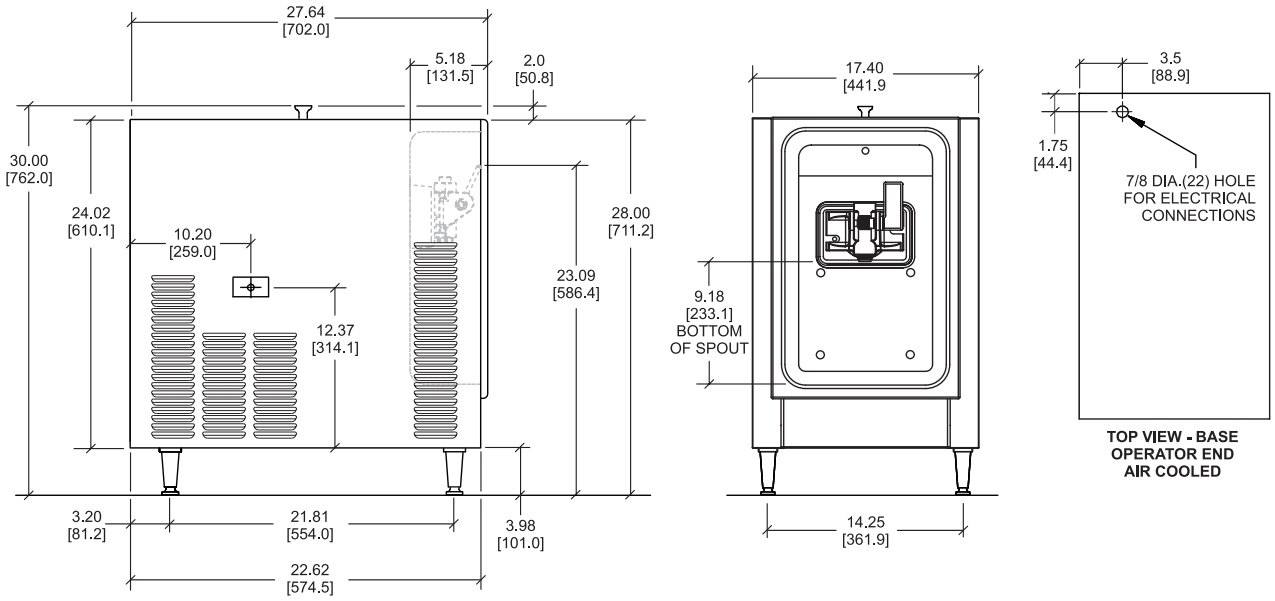

FIGURES IN BRACKETS INDICATE MILLIMETERS / DECIMAL AND FRACTIONAL DIMENSIONS EQUAL TO (PLUS OR MINUS 1/16 INCH [1.5mm]).

Weights	lbs.	kgs.
Net	212	96.2
Crated	243	110.2
	cu. ft.	**cu. m.**
Volume	21.1	0.60

Dimensions	in.	mm.
Width	17-7/16	441.9
Depth	27-11/16	702.0
Height	30	711.2
Counter Clearance	3-15/16	101.0

**Mounted on standard legs*

Electrical	Total Amps	Supplied with NEMACord
115/60/1 Air	16.0	5-20P
208-230/60/1 Air	10.2	6-15P
220-240/50/1 Air	7.8	----

This unit may be manufactured in other electrical characteristics. Refer to the local Taylor Distributor for availability.

(For exact electrical information, always refer to the data label of the unit.)

Bidding Specs

Electrical: Volt _____ Hz_____ ph _____

Neutral: ☐Yes ☐No | **Cooling**: ☐Air ☐Water ☐NA

Options:_____

_____

Specifications

Electrical

One dedicated electrical connection is required. See the Electrical chart for the proper electrical requirements. Manufactured to be cord connected. Consult the international Taylor distributor for cord & receptacle specifications for 50 Hz. equipment.

Beater Motor

One, 0.5 HP

Refrigeration System

One, 3,000 BTU/hr. R404A.
Separate Hopper Refrigeration (SHR), One, 400 BTU/hr. R134a.
(BTUs may vary depending on compressor used.)

Air Cooled

Minimum 6" (152 mm) on both sides. Install the skirt provided on the right side of the unit and place the back of the unit against a wall to prevent recirculation of warm air. Minimum air clearances must be met to assure adequate air flow for optimum performance.

Options

- Cone Dispenser

Continuing research results in steady improvements; therefore, these specifications are subject to change without notice.

TAYLOR®

Taylor Company,
Rockton, Illinois 61072
815-624-8333 **800-255-0626** Fax 815-624-8000
www.taylor-company.com