Models 150, 152, 162, & 168

Taylormate
Soft Serve Freezers

Operating Instructions

028749-M

Carrier
A United Technologies Company

TAYLOR®

8/13/08

Complete this page for quick reference when service is required:

Taylor Distributor: _____

Address: _____

Phone: _____

Service: _____

Parts: _____

Date of Installation: _____

Information found on data plate:

Model Number: _____

Serial Number: _____

Electrical Specs: Voltage _____ Cycle _____

Phase _____

Maximum Fuse Size: _____ Amps

Minimum Wire Ampacity: _____ Amps

Part Number: _____

© August, 2008 Taylor
All rights reserved.
028749-M

TAYLOR®

The word Taylor and the Crown design are registered trademarks in the United States of America and certain other countries.

Taylor Company
a division of Carrier Commercial Refrigeration, Inc.
750 N. Blackhawk Blvd.
Rockton, IL 61072

Table of Contents

Section 1 To the Installer 1

Installer Safety 1
Site Preparation 1
Air Cooled Units 2
Electrical Hook-Up Installation For 60 Cycle, 1 Phase, Supplied With Cord and Plug 2
Electrical Connections For Models Without Cord and Plug Supplied 2
Beater Rotation 3
Refrigerant 3

Section 2 To the Operator 4

Compressor Warranty Disclaimer 4

Section 3 Safety 5

Section 4 Operator Parts Identification 7

Model 150 7
Model 152 8
Model 162 9
Model 168 10
Models 150 & 152 Door Assembly 11
Models 162 & 168 Door Assembly 12
Models 150 and 152 Accessories 13
Models 162 and 168 Accessories 14

Section 5 Important: To the Operator 15

Symbol Definitions 15
Reset Button 16
Power Switch 16
Feed Tube 16
Taylor Quality Control 16
Indicator Light – “Mix Low” 16

Mix Refrigeration Switch 16
Separate Hopper Refrigeration (SHR) 16
Cylinder Temperature Retention (CTR) 17

Section 6 Operating Procedures 18

Assembly 19
Sanitizing 22
Priming 24
Closing Procedure 25
Draining Product From the Freezing Cylinder 25
Rinsing 25
Cleaning 25
Disassembly 26
Brush Cleaning 26

Section 7 Important: Operator Checklist 27

During Cleaning and Sanitizing 27
Troubleshooting Bacterial Count 27
Regular Maintenance Checks 27
Winter Storage 28

Section 8 Troubleshooting Guide 29

Section 9 Parts Replacement Schedule 32

Section 10 Parts List 33

Wiring Diagrams 42

Note: Continuing research results in steady improvements; therefore, information in this manual is subject to change without notice.

© August, 2008Taylor
All rights reserved.
028749-M

TAYLOR®

The word Taylor and the Crown design are registered trademarks in the United States of America and certain other countries.

Taylor Company
a division of Carrier Commercial Refrigeration, Inc.
750 N. Blackhawk Blvd.
Rockton, IL 61072

Section 1 To the Installer

The following are general installation instructions. For complete installation details, please see the check out card.

Installer Safety

In all areas of the world, equipment should be installed in accordance with existing local codes. Please contact your local authorities if you have any questions.

Care should be taken to ensure that all basic safety practices are followed during the installation and servicing activities related to the installation and service of Taylor equipment.

- Only authorized Taylor service personnel should perform installation and repairs on the equipment.
- Authorized service personnel should consult OSHA Standard 29CFRI910.147 or the applicable code of the local area for the industry standards on lockout/tagout procedures before beginning any installation or repairs.
- Authorized service personnel must ensure that the proper PPE is available and worn when required during installation and service.
- Authorized service personnel must remove all metal jewelry, rings, and watches before working on electrical equipment.

The main power supply(s) to the freezer must be disconnected prior to performing any repairs. Failure to follow this instruction may result in personal injury or death from electrical shock or hazardous moving parts as well as poor performance or damage to the equipment.

Note: All repairs must be performed by an authorized Taylor Service Technician.

This unit has many sharp edges that can cause severe injuries.

Site Preparation

Review the area the unit is to be installed in before uncrating the unit, making sure that all possible hazards the user or equipment may come into have been addressed.

For Indoor Use Only: This unit is designed to operate indoors, under normal ambient temperatures of 70°-75°F (21°-24°C). The freezer has successfully performed in high ambient temperatures of 104°(40°C) at reduced capacities.

This unit must **NOT** be installed in an area where a water jet or hose can be used. **NEVER** use a water jet or hose to rinse or clean the unit. Failure to follow this instruction may result in electrocution.

This unit must be installed on a level surface to avoid the hazard of tipping. Extreme care should be taken in moving this equipment for any reason. Two or more persons are required to safely move this unit. Failure to comply may result in personal injury or equipment damage.

Uncrate the unit and inspect it for damage. Report any damage to your Taylor Distributor.

This piece of equipment is made in the USA and has USA sizes of hardware. All metric conversions are approximate and vary in size.

Air Cooled Units

The models 150 and 152 require a minimum of 6” (152 mm) of clearance around both sides. Install the skirt provided on the right side of the unit and place the back of the unit against a wall to prevent recirculation of warm air. The model 162 requires 6” (152 mm) on all sides and the skirt installed on the rear of the unit. The model 168 requires 3” (76 mm) on all sides and the skirt installed on the rear of the unit. Minimum air clearances must be met to assure adequate air flow for optimum performance.

These machines are designed for indoor use only.

DO NOT install the machines in an area where a water jet could be used. Failure to follow this instruction may result in serious electrical shock.

Electrical Hook-Up Installation For

60 Cycle, 1 Phase, Supplied With Cord and Plug

This equipment is supplied with a 3-wire cord and grounding type plug for connection to a single phase, 60 cycle, branch circuit supply. This unit must be plugged into a properly grounded receptacle. The cord and plug provided for 115/60/1, is 20 amp; therefore the wall outlet must also be 20 amp. Check the data label, located on the side panel, for electrical specifications.

Permanent wiring may be employed if required by local codes. Instructions for conversion to permanent wiring are as follows:

1. Be sure the freezer is electrically disconnected.
2. Remove the appropriate panel and locate the small electrical box at the base of the freezer.
3. Remove the factory-installed cord and strain relief bushing.
4. Route incoming permanent wiring through 7/8” (22 mm) hole in base pan.
5. Connect two power supply leads. Attach ground (earth) wire to the grounding lug inside the electrical box.
6. Be sure the unit is properly grounded before applying power.

FOLLOW YOUR LOCAL ELECTRICAL CODES!

Electrical Connections For

Models Without Cord and Plug Supplied

Each freezer requires one power supply for each data label. Check the data label(s) on the freezer for fuse, circuit ampacity and electrical specifications. Refer to the wiring diagram provided inside of the control box, for proper power connections.

In the United States, this equipment is intended to be installed in accordance with the National Electrical Code (NEC), ANSI/NFPA 70-1987. The purpose of the NEC code is the practical safeguarding of persons and property from hazards arising from the use of electricity. This code contains provisions considered necessary for safety. Compliance therewith and proper maintenance will result in an installation essentially free from hazard! In all other areas of the world, equipment should be installed in accordance with the existing local codes. Please contact your local authorities.

CAUTION: THIS EQUIPMENT MUST BE PROPERLY GROUNDED! FAILURE TO DO SO CAN RESULT IN SEVERE PERSONAL INJURY FROM ELECTRICAL SHOCK!

This unit is provided with an equipotential grounding lug that is to be properly attached to the rear of the frame by the authorized installer. The installation location is marked by the equipotential bonding symbol (5021 of IEC 60417-1) on both the removable panel and the equipment’s frame.

- Stationary appliances which are not equipped with a power cord and a plug or another device to disconnect the appliance from the power source must have an all-pole disconnecting device with a contact gap of at least 3mm installed in the external installation.
- Appliances that are permanently connected to fixed wiring and for which leakage currents may exceed 10 mA, particularly when disconnected, not used for long periods, or during initial installation, shall have protective devices such as a GFI to protect against the leakage of current, installed by authorized personnel to the local codes.
- Supply cords used with this unit shall be oil-resistant, sheathed flexible cable, not lighter than ordinary polychloroprene or other equivalent synthetic elastomer-sheathed cord (Code designation 60245 IEC 57) installed with the proper cord anchorage to relieve conductors from strain, including twisting, at the terminals and protect the insulation of the conductors from abrasion.

Beater Rotation

Beater rotation must be clockwise as viewed looking into the freezing cylinder.

Note: The following procedures should be performed by an authorized service technician.

To correct rotation on a three-phase unit, interchange any two incoming power supply lines at freezer main terminal block only. To correct rotation on a single-phase unit, change the leads inside the beater motor. (Follow diagram printed on motor.)

Electrical connections are made directly to the terminal block provided in the splice box, mounted on the base pan on each side of the model 168, and located in the splice boxes mounted mid-level on the frame channel on the sides of the model 162.

Refrigerant

In consideration of our environment, Taylor proudly uses only earth friendly HFC refrigerants. The HFC refrigerant used in this unit is R404A. This refrigerant is generally considered non-toxic and non-flammable, with an Ozone Depleting Potential (ODP) of zero (0).

However, any gas under pressure is potentially hazardous and must be handled with caution.

NEVER fill any refrigerant cylinder completely with liquid. Filling the cylinder to approximately 80% will allow for normal expansion.

Refrigerant liquid sprayed onto the skin may cause serious damage to tissue. Keep eyes and skin protected. If refrigerant burns should occur, flush immediately with cold water. If burns are severe, apply ice packs and contact a physician immediately.

Taylor reminds technicians to be cautious of government laws regarding refrigerant recovery, recycling, and reclaiming systems. If you have any questions regarding these laws, please contact the factory Service Department.

WARNING: R404A refrigerant used in conjunction with polyolester oils is extremely moisture absorbent. When opening a refrigeration system, the maximum time the system is open must not exceed 15 minutes. Cap all open tubing to prevent humid air or water from being absorbed by the oil.

Section 2 To the Operator

The freezer you have purchased has been carefully engineered and manufactured to give you dependable operation. The Taylor Company models covered in this manual consist of the following: 150, 152, 162 and 168.

These units, when properly operated and cared for, will produce a consistent quality product. Like all mechanical products, they will require cleaning and maintenance. A minimum amount of care and attention is necessary if the operating procedures outlined in this manual are followed closely.

This Operator's Manual should be read before operating or performing any maintenance on your equipment.

These units will NOT eventually compensate and correct for any errors during the set-up or filling operations. Thus, the initial assembly and priming procedures are of extreme importance. It is strongly recommended that personnel responsible for the equipment's operation, both assembly and disassembly, go through these procedures together in order to be properly trained and to make sure that no misunderstandings exist.

In the event you should require technical assistance, please contact your local authorized Taylor Distributor.

Note: Warranty is valid only if the parts are authorized Taylor parts, purchased from an authorized Taylor Distributor, and the required service work is provided by an authorized Taylor service technician. Taylor reserves the right to deny warranty claims on equipment or parts if non-approved parts or refrigerant were installed in the machine, system modifications were performed beyond factory recommendations, or it is determined that the failure was caused by neglect or abuse.

Note: Constant research results in steady improvements; therefore, information in this manual is subject to change without notice.

If the crossed out wheeled bin symbol is affixed to this product, it signifies that this product is compliant with the EU Directive as well as other similar legislation in effect after August 13, 2005. Therefore, it must be collected separately after its use is completed, and cannot be disposed as unsorted municipal waste.

The user is responsible for returning the product to the appropriate collection facility, as specified by your local code.

For additional information regarding applicable local laws, please contact the municipal facility and/or local distributor.

Compressor Warranty Disclaimer

The refrigeration compressor(s) on this machine are warranted for the term indicated on the warranty card accompanying this machine. However, due to the Montreal Protocol and the U.S. Clean Air Act Amendments of 1990, many new refrigerants are being tested and developed, thus seeking their way into the service industry. Some of these new refrigerants are being advertised as drop-in replacements for numerous applications. It should be noted that, in the event of ordinary service to this machine's refrigeration system, **only the refrigerant specified on the affixed data label should be used**. The unauthorized use of alternate refrigerants will void your compressor warranty. It will be the owner's responsibility to make this fact known to any technician he employs.

It should also be noted that Taylor does not warrant the refrigerant used in its equipment. For example, if the refrigerant is lost during the course of ordinary service to this machine, Taylor has no obligation to either supply or provide its replacement either at billable or unbillable terms. Taylor does have the obligation to recommend a suitable replacement if the original refrigerant is banned, obsoleted, or no longer available during the five year warranty of the compressor.

The Taylor Company will continue to monitor the industry and test new alternates as they are being developed. Should a new alternate prove, through our testing, that it would be accepted as a drop-in replacement, then the above disclaimer would become null and void. To find out the current status of an alternate refrigerant as it relates to your compressor warranty, call the local Taylor Distributor or the Taylor Factory. Be prepared to provide the Model/Serial Number of the unit in question.

Section 3 Safety

We at Taylor Company are concerned about the safety of the operator when he or she comes in contact with the freezer and its parts. Taylor has gone to extreme efforts to design and manufacture built-in safety features to protect both you and the service technician. As an example, warning labels have been attached to the freezer to further point out safety precautions to the operator.

IMPORTANT! Failure to adhere to the following safety precautions may result in severe personal injury. Failure to comply with these warnings may damage the machine and its components. Component damage will result in part replacement expense and service repair expense.

To Operate Safely:

DO NOT operate the freezer without reading the Operator Manual. Failure to follow this instruction may result in equipment damage, poor freezer performance, health hazards, or personal injury.

This equipment is provided with a grounding lug that is to be properly attached to the rear of the frame by the authorized installer. The installation location is marked by the equipotential bonding symbol (5021 of IEC 60417-1) on the removable panel and the frame.

- **DO NOT** operate the freezer unless it is properly grounded.
- **DO NOT** operate the freezer with larger fuses than specified on the freezer data label.
- **DO NOT** attempt any repairs unless the main power supply to the freezer has been disconnected.
- Appliances that are permanently connected to fixed wiring and for which leakage currents may exceed 10 mA, particularly when disconnected or not used for long periods, or during initial installation, shall have protective devices such as a GFI, to protect against the leakage of current, installed by the authorized personnel to the local codes.
- Supply cords used with this unit shall be oil-resistant, sheathed flexible cable not lighter than ordinary polychloroprene or other equivalent synthetic elastomer-sheathed cord (Code designation 60245 IEC 57) installed with the proper cord anchorage to relieve conductors from strain, including twisting, at the terminals and protect the insulation of the conductors from abrasion.

Failure to follow these instructions may result in electrocution. Contact your local authorized Taylor Distributor for service.

DO NOT use a water jet to clean or rinse the freezer. Failure to follow these instructions may result in serious electrical shock.

- **DO NOT** allow untrained personnel to operate this machine.
- **DO NOT** put objects or fingers in door spout.
- **DO NOT** operate the freezer unless all service panels and access doors are restrained with screws.
- **DO NOT** remove the freezer door or beater assembly unless the control switches are in the “OFF” position.

Failure to follow these instructions may result in severe personal injury from hazardous moving parts.

- **DO NOT** put objects or fingers in fill or discharge openings. Failure to follow this instruction may result in contaminated product or personal injury from blade contact.
- **USE EXTREME CAUTION** when removing the beater assembly. The scraper blades are very sharp and may cause injury.

DO NOT obstruct air intake and discharge openings:

- **150 and 152:** Minimum of 6” (152 mm) of clearance around both sides. Install the skirt provided on the right side of the unit and place the back of the unit against a wall to prevent recirculation of warm air.
- **162:** Minimum of 6” (152 mm) on all sides. Install the skirt provided on the rear of the unit.
- **168:** Minimum of 3” (76 mm) on all sides. Install the skirt provided on the rear of the unit.

Failure to follow this instruction may cause poor freezer performance and damage to the machine.

This freezer must be placed on a level surface. Failure to comply may result in personal injury or equipment damage.

These freezers are designed to operate indoors, under normal ambient temperatures of 70°-75°F (21°-24°C). The freezers have successfully performed in high ambient temperatures of 104°F (40°C) at reduced capacities.

NOISE LEVEL: Airborne noise emission does not exceed 78 dB(A) when measured at a distance of 1.0 meter from the surface of the machine and at a height of 1.6 meters from the floor.

Section 4 Operator Parts Identification

Model 150

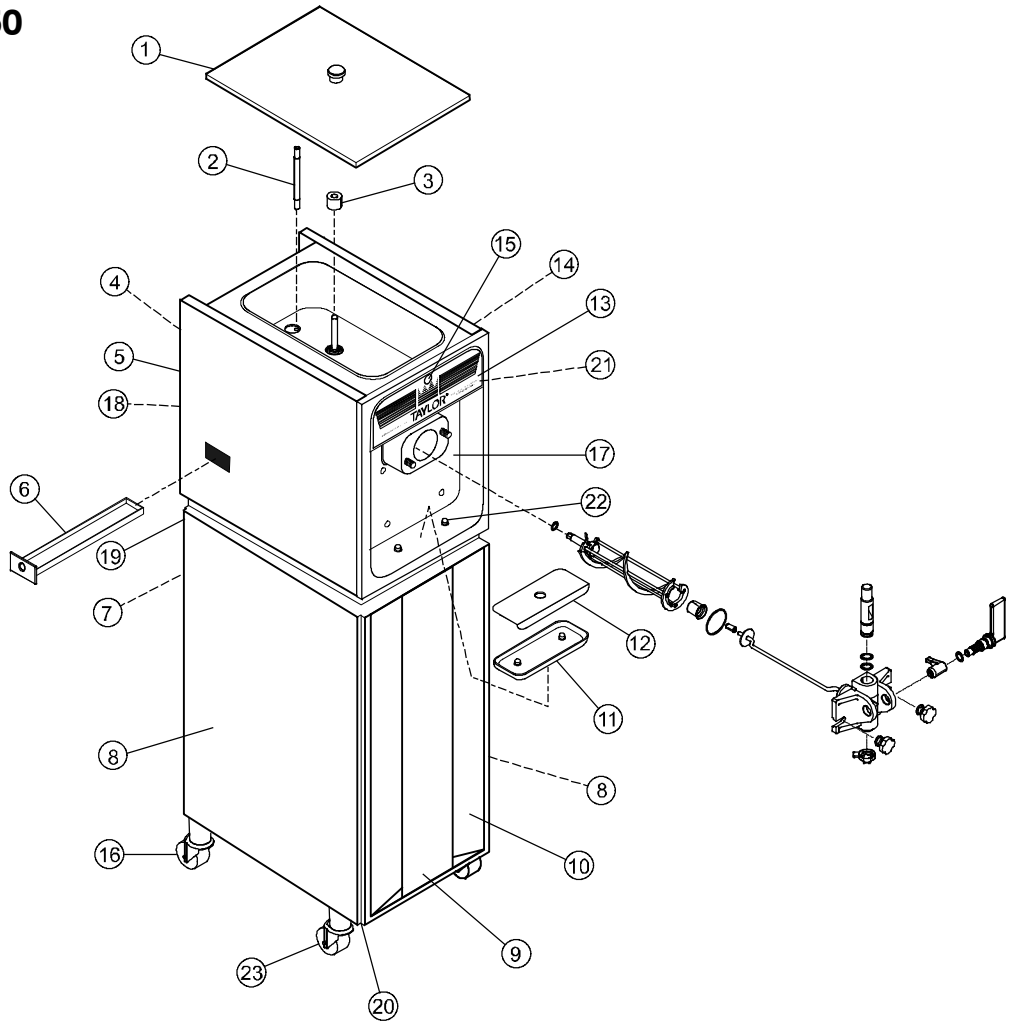

Figure 1

Item	Description	Part No.
1	Cover A.-Hopper	X48690
2	Tube-Feed-.166 Hole	035819
3	Float A.-Mix Level	X39690
4	Panel-Back Top	050429
5	Panel-Upper Side Left	030783-SS
6	Pan-Drip 11-5/8 Long	027503
7	Panel-Back Bottom	050430
8	Panel-Lower Side	030792-SS
9	Panel-Insert	025533-SS
10	Panel A.-Lower Front	X25518
11	Tray-Drip 10-7/8 x 4-7/16	025062
12	Shield-Splash 11-1/4 x 4-13/16	025063

Item	Description	Part No.
13	Decal-Decorative-Taylor	047667
14	Panel-Upper Side Right	030784-SS
15	Light-Amber-Round Mix Low	039707
16	Caster-3” Swivel	012227
17	Panel A.-Front	X25036
18	Trim-Top Back Panel	025536
19	Trim-Middle Back Panel	025537
20	Trim-Side & Front	025528
21	Plate-Decorative	041034-SS
22	Holder-Drip Tray	035866
23	Caster-3” Rigid	012226

Model 152

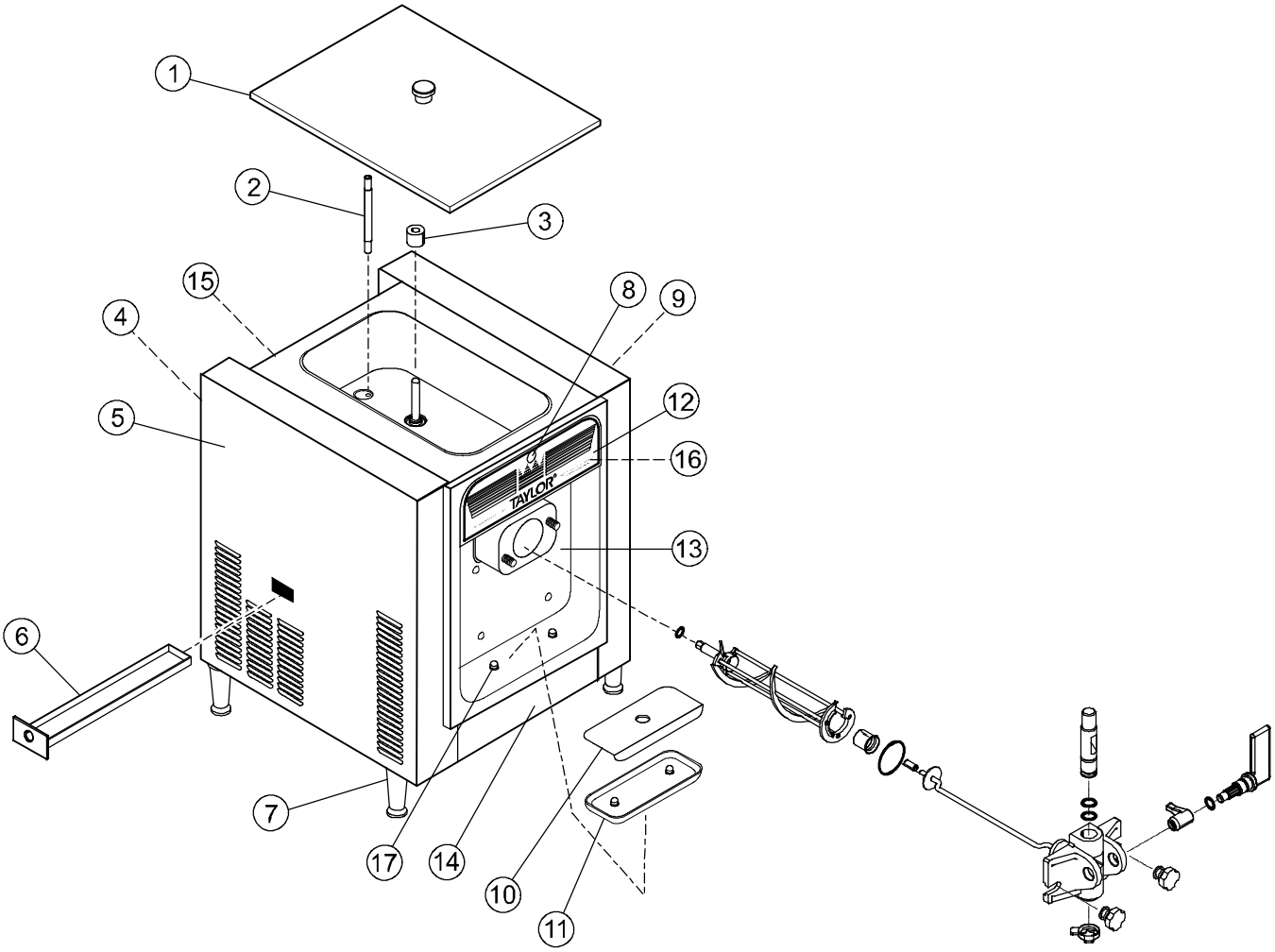

Figure 2

Item	Description	Part No.
1	Cover A.-Hopper	X48690
2	Tube-Feed-.166 Hole	035819
3	Float A.-Mix Level	X39690
4	Panel-Rear	051556
5	Panel-Side Left	051557
6	Pan-Drip 11-5/8 Long	027503
7	Leg-Plastic	024755
8	Light-Amber-Round Mix Low	039707
9	Panel-Side Right	051558

Item	Description	Part No.
10	Shield-Splash 11-1/4 x 4-13/16	025063
11	Tray-Drip 10-7/8 x 4-7/16	025062
12	Decal-Decorative-Taylor	047667
13	Panel A.-Front	X25036
14	Trim-Front	025862-SS
15	Trim-Top Back	025866
16	Plate-Decorative	041034-SS
17	Holder-Drip Tray	035866

Model 162

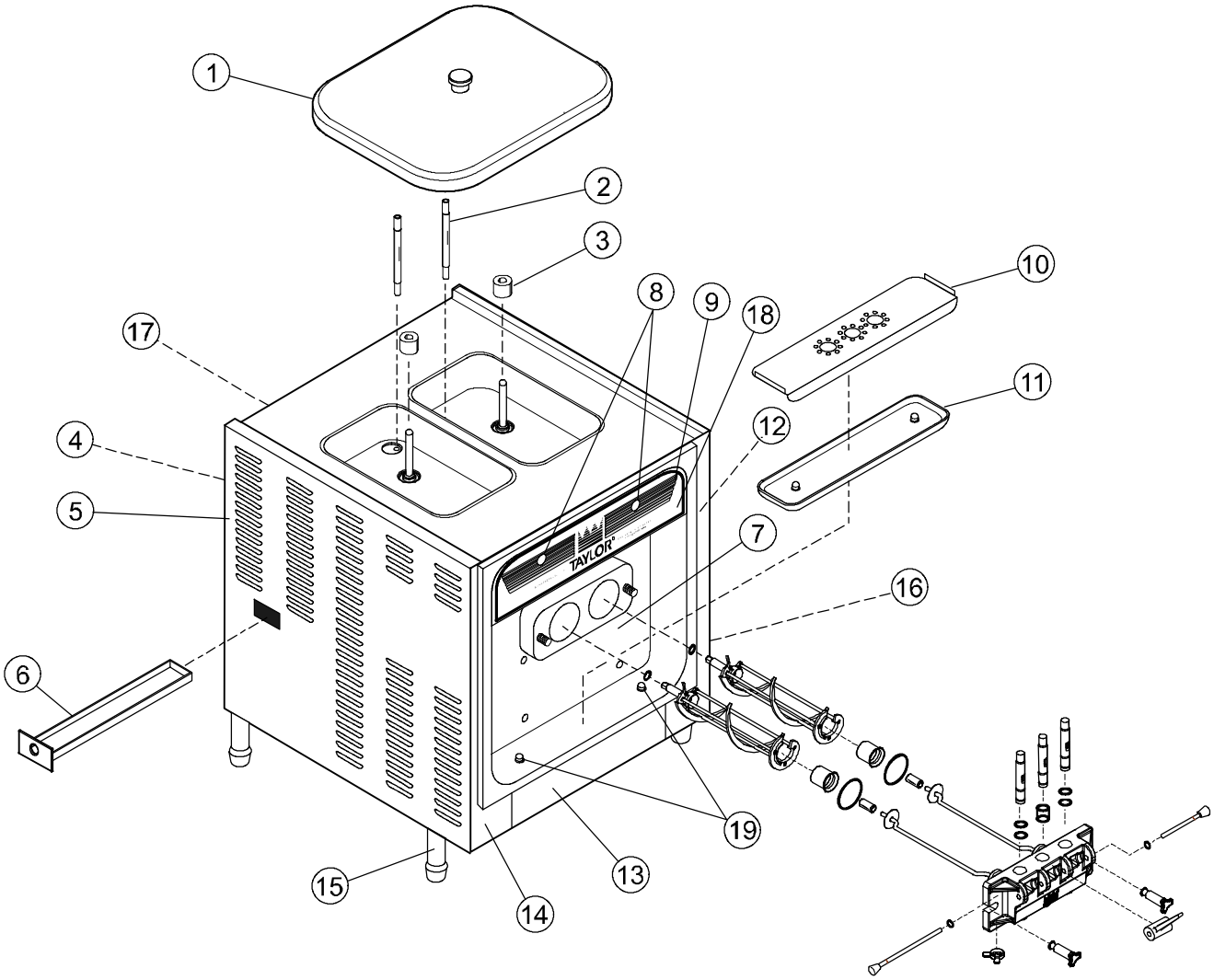

Figure 3

Item	Description	Part No.
1	Cover A.-Hopper	X37963-SER
2	Tube-Feed-.166 Hole	030797
3	Float A.-Mix Level	X39690
4	Panel-Rear	047276-SS
5	Panel-Side-Left	050213-SS
6	Pan-Drip 19-1/2 Long	035034
7	Panel A.-Front	X30711
8	Light-Amber-Round Mix Low	039707
9	Decal-Decorative-Taylor	047666
10	Shield-Splash	030789

Item	Description	Part No.
11	Tray-Drip-16-7/8 x 4-3/8	030565
12	Panel-Front Right	035933-SS
13	Trim-Front	050212-SS
14	Panel-Front Left	035932-SS
15	Leg-4.250” (With O-Ring)	013458
16	Panel-Side Right	050214-SS
17	Trim-Panel-Rear	035923
18	Plate-Decorative	039723-SS
19	Holder-Drip Tray	035866

Model 168

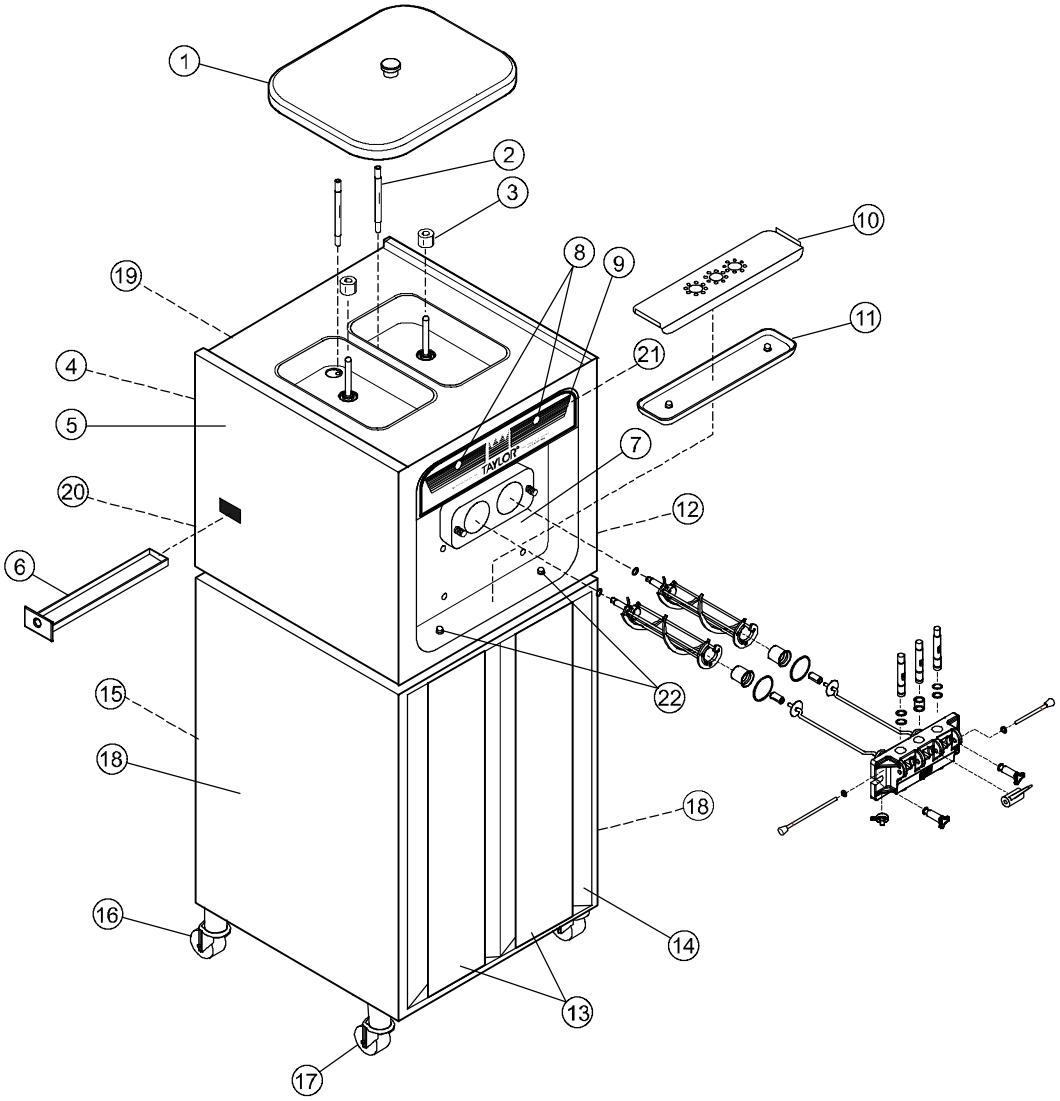

Figure 4

Item	Description	Part No.
1	Cover A.-Hopper	X37963-SER
2	Tube-Feed-.166 Hole SS	030797
3	Float A.-Mix Level	X39690
4	Panel-Top Back	030790-SS
5	Panel-Upper Side Left	030783-SS
6	Pan-Drip 17-1/4" Long	027504
7	Panel A.-Front	X30711
8	Light-Amber-Round Mix Low	039707
9	Decal-Decorative-Taylor	047666
10	Shield-Splash 17-5/8 Long	030789
11	Tray-Drip 16-7/8 Long	030565

Item	Description	Part No.
12	Panel-Upper Side Right	030784-SS
13	Insert-Front Panel	030773-SS
14	Panel A.-Lower Front	X30747
15	Panel-Bottom Back	055833
16	Caster-3" Rigid (Rear)	012226
17	Caster-3" Swivel (Front)	012227
18	Panel-Lower Side-Right/Left	030792-SS
19	Trim-Top Back Panel	030775
20	Trim-Middle Back Panel	030795
21	Plate-Decorative	039723-SS
22	Holder-Drip Tray	035866

Models 150 & 152 Door Assembly

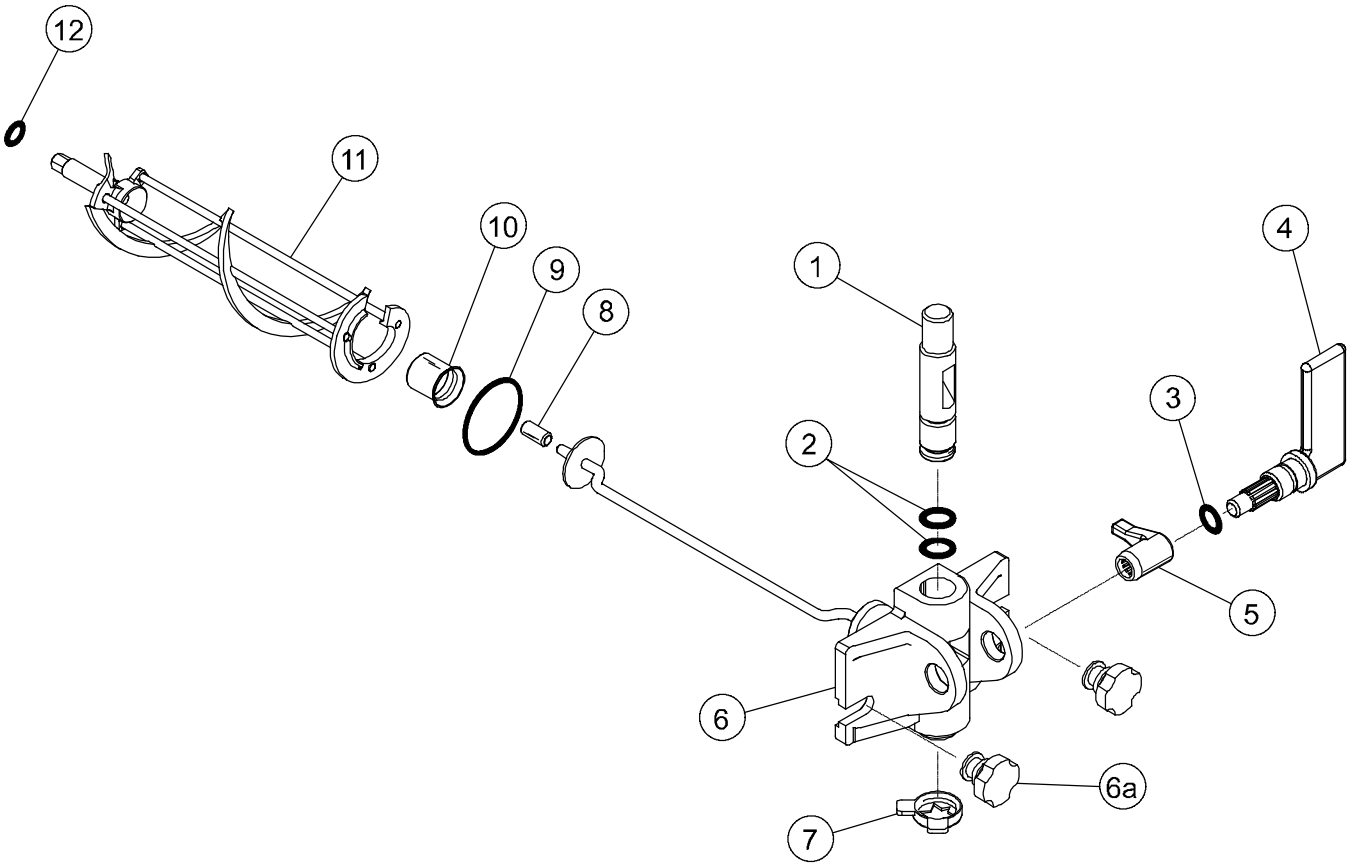

Figure 5

Item	Description	Part No.
1	Valve-Draw	024763
2	O-Ring-7/8 OD x .103 W	014402
3	O-Ring-3/4 OD x .103 W	015835
4	Handle-Draw	024762
5	Arm-Valve Lifter	024761
6	Door A.-1 Spout	X38959-SER
6a	Nut-Stud	034829

Item	Description	Part No.
7	Cap-Design 1.010” ID - 6 Point	014218
8	Bearing-Guide	014496
9	O-Ring-2-3/4 OD x .139 W	019998
10	Bearing-Front	023262
11	Beater A.	X24689
12	O-Ring-13/16 OD .139 W	021278

Models 162 & 168 Door Assembly

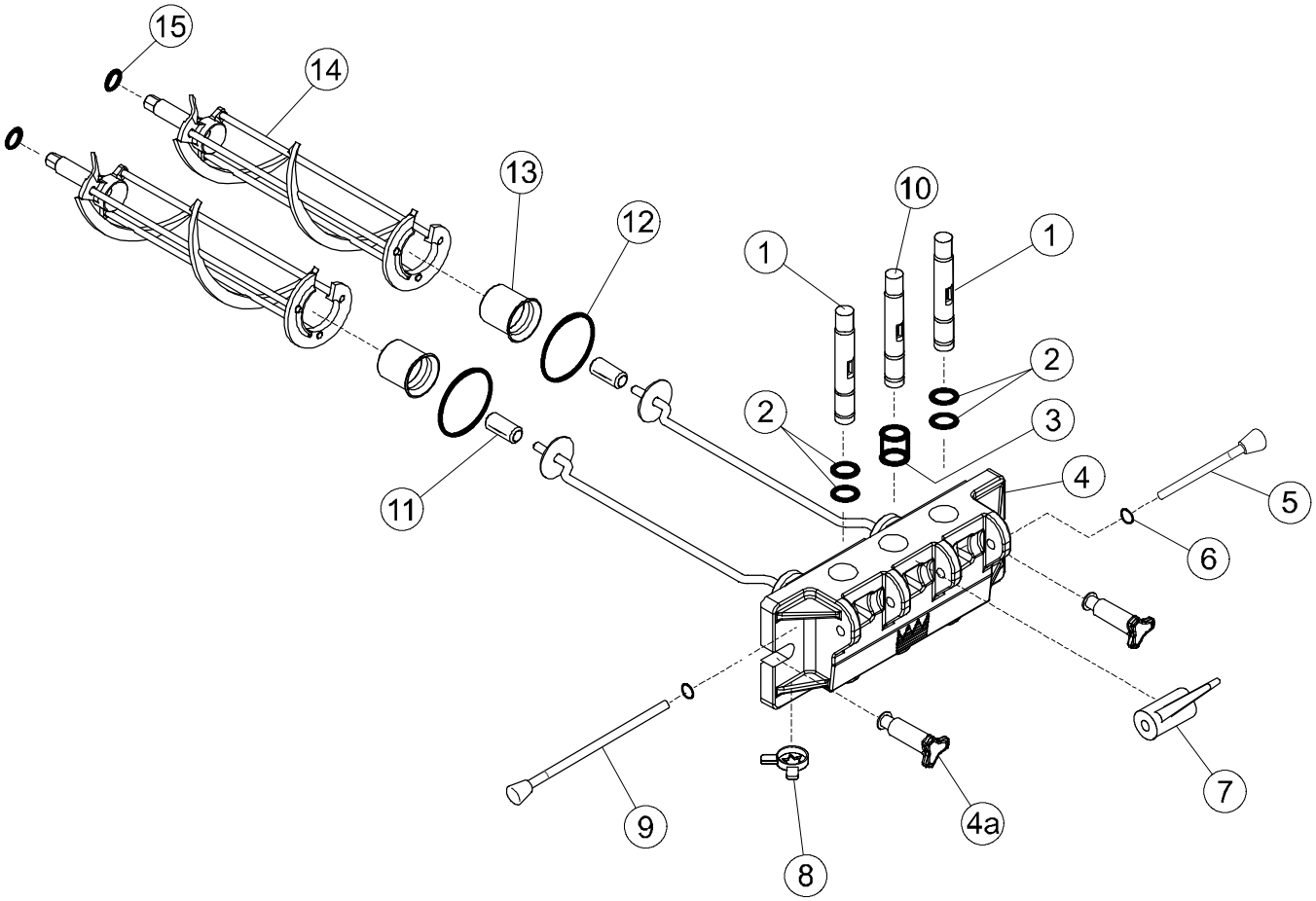

Figure 6

Item	Description	Part No.
1	Valve-Draw	024763
2	O-Ring-7/8 OD x .103 W	014402
3	Seal-Draw Valve (H-Ring)	030930
4	Door A.-3 Spout	X56906-SER
4a	Nut-Stud	056802
5	Pin A.-Pivot Short	X38539
6	O-Ring-5/16 OD x .070 W	016272
7	Handle-Draw Valve	030564

Item	Description	Part No.
8	Cap-Design 1.010” ID - 6 Point	014218
9	Pin A.-Pivot Long	X38538
10	Valve-Draw-Center	031164
11	Bearing-Guide	014496
12	O-Ring-2-3/4 OD x .139 W	019998
13	Bearing-Front	023262
14	Beater A.	X24689
15	O-Ring-13/16 OD x .139 W	021278

Models 150 and 152 Accessories

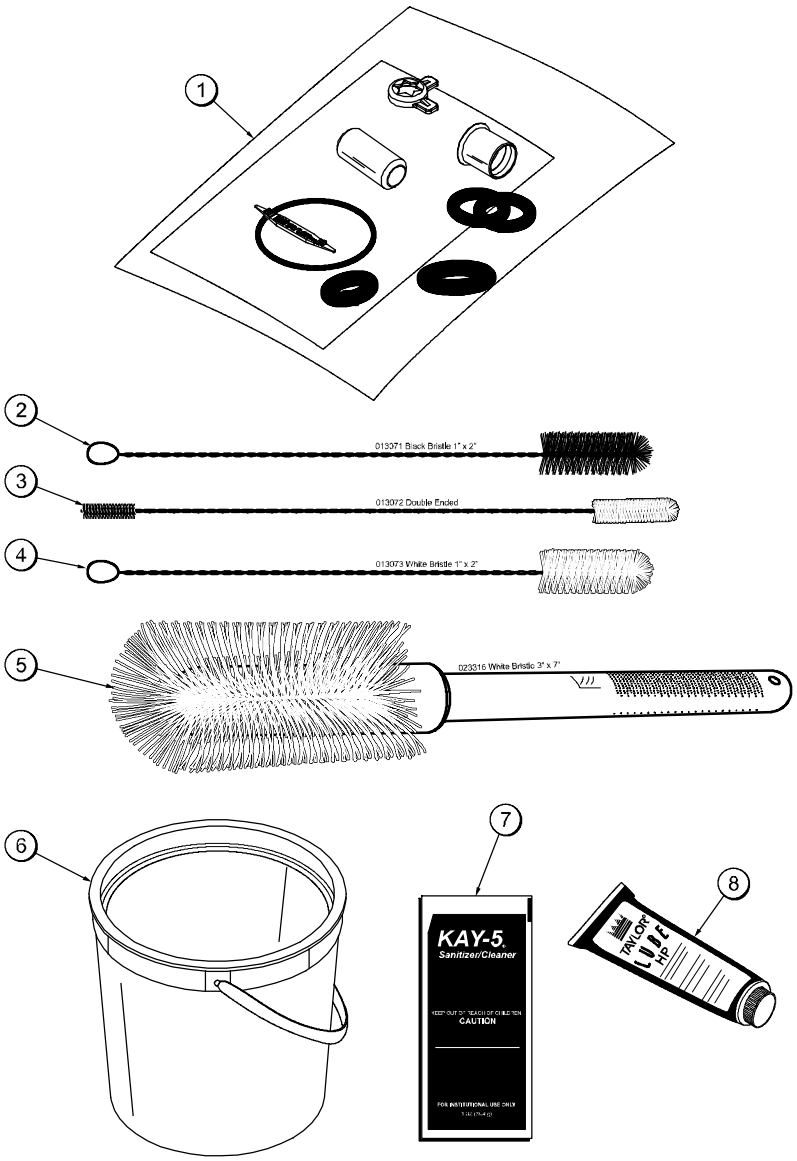

Figure 7

Item	Description	Part No.
1	Kit A.-Tune Up	X25802
2	Brush-Rear Bearing 1" x 2"	013071
3	Brush-Double-Ended	013072
4	Brush-Draw Valve 1 OD x 2 x 17	013073

Item	Description	Part No.
5	Brush-Mix Pump Body-3 x 7 White	023316
6	Pail-6 Qt.	023348
*7	Sanitizer Kay-5 (25 Packets)	041081
8	Lubricant-Taylor 4 Oz.	047518

*041081 is a sample size of sanitizer sent with the unit. The following sanitizers are available to order:
041082 (Sanitizer-Kay-5 = 125 Packets) or
055492 (Sanitizer-Stera Sheen = 100 packets).

Models 162 and 168 Accessories

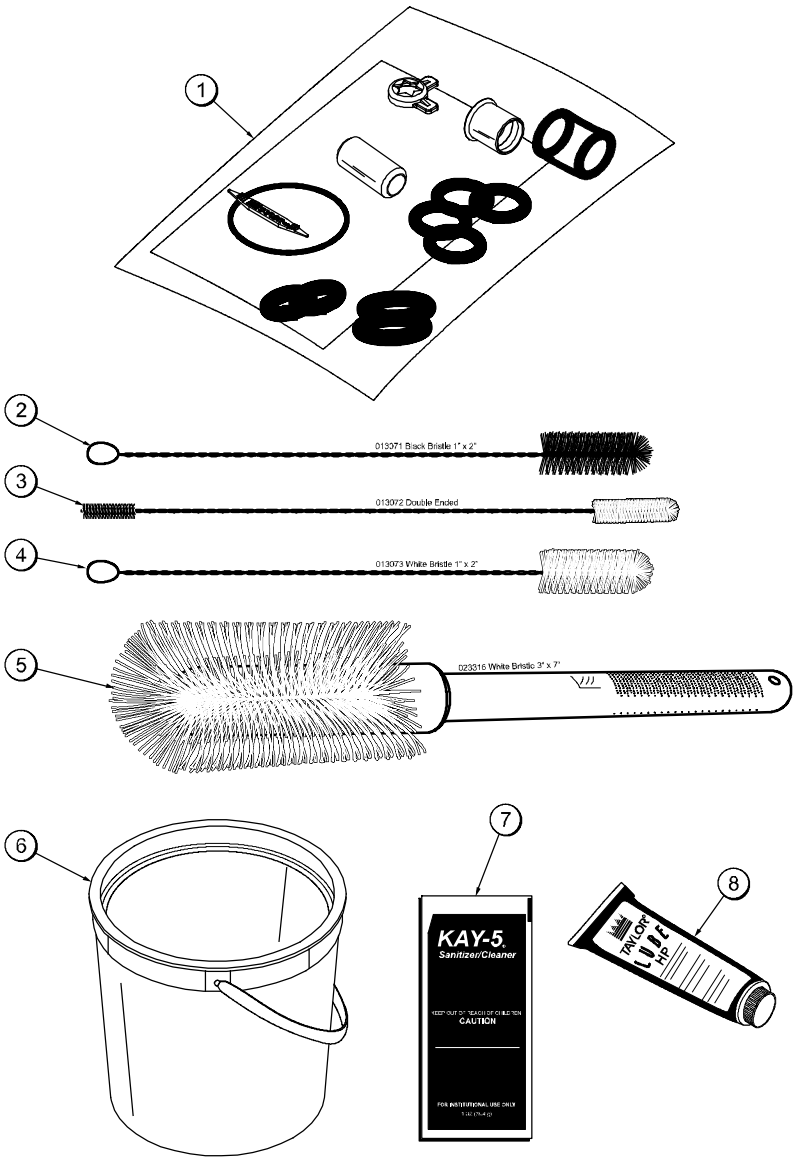

Figure 8

Item	Description	Part No.
1	Kit A.-Tune Up	X31167
2	Brush-Rear Bearing 1" x 2"	013071
3	Brush-Double Ended	013072
4	Brush-Draw Valve 1" x 2" x 17"	013073

Item	Description	Part No.
5	Brush-Mix Pump Body-3" x 7"	023316
6	Pail-6 Qt.	023348
*7	Sanitizer Kay-5 (25 Packets)	041081
8	Lubricant-Taylor 4 Oz.	047518

*041081 is a sample size of sanitizer sent with the unit. The following sanitizers are available to order: 041082 (Sanitizer-Kay-5 = 125 Packets) or 055492 (Sanitizer-Stera Sheen = 100 packets).

080902

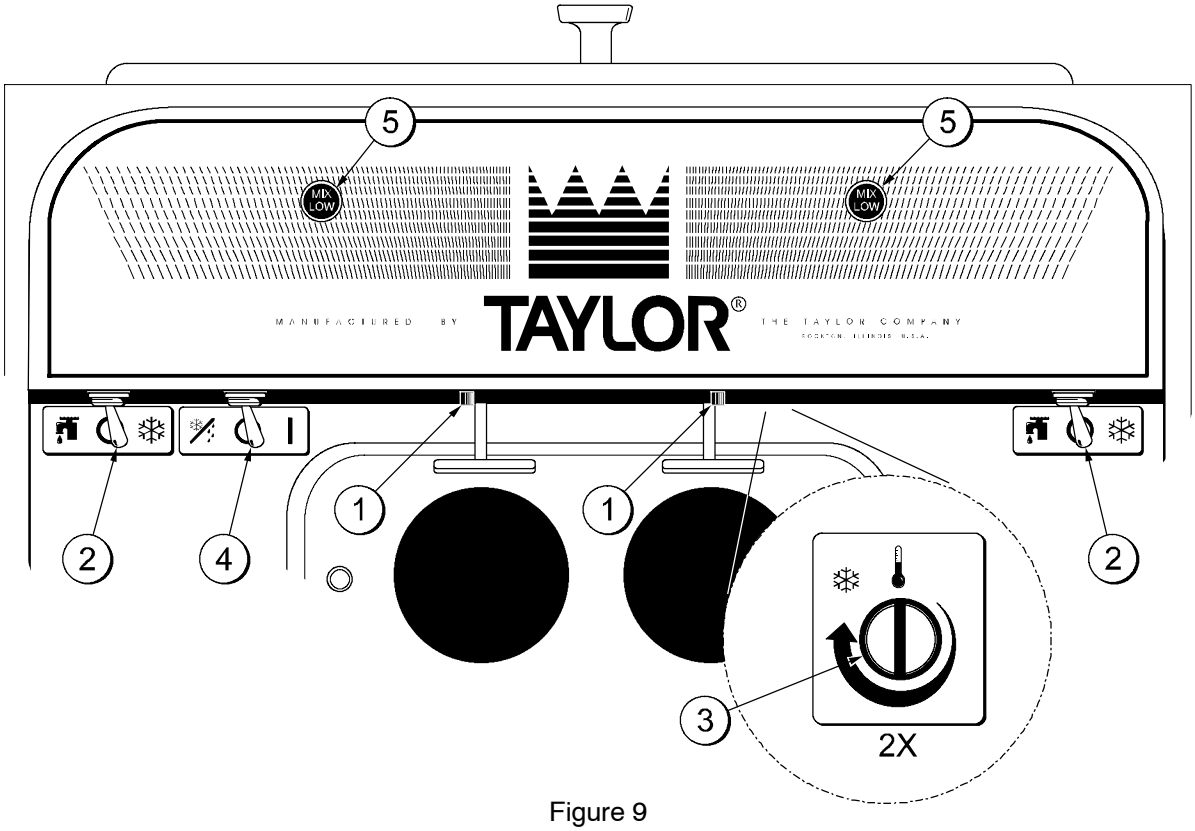

Figure 9

Item	Description
1	Reset Button
2	Power Switch
3	Temperature Control
4	Mix Refrigeration Switch
5	Indicator Lights – “Mix Low”

Symbol Definitions

To better communicate in the International arena, the words on many of our operator switches and buttons have symbols to indicate their functions. Your Taylor equipment is designed with these International symbols.

The following chart identifies the symbol definitions used on the operator switches.

❄ = ON/AUTO key

I = ON key

O = OFF key

= WASH key

= STANDBY key

Reset Button

If an overload condition occurs, the freezer will automatically stop operating. To properly reset the freezer, place the toggle switch in the “OFF” position. Wait two or three minutes; then press the reset button. Place the power switch in the “WASH” position and observe the freezer’s performance; place the power switch in the “AUTO” position.

Note: If the freezer is unplugged from the wall receptacle, it will be necessary to press the reset button for the freezer to operate once power is re-established.

Power Switch

The center position is “OFF”. The left position is “WASH” which activates the beater motor only. The right position is “AUTO”, which activates the beater motor and the refrigeration system.

Feed Tube

The models 150, 152, 162 and 168 are called upon to handle a large variety of products (i.e., soft serve, yogurts, Italian ices, sherbets, etc.). Thus, the consistency of the mix you use will vary. The feed tube meters a combination of mix and air into the freezing cylinder. If not enough mix enters the freezing cylinder, a freeze-up may occur, which will cause eventual damage to the beater. Depending upon the product being run, you may wish to contact your local authorized Taylor Distributor to make a slight adjustment in the feed tube.

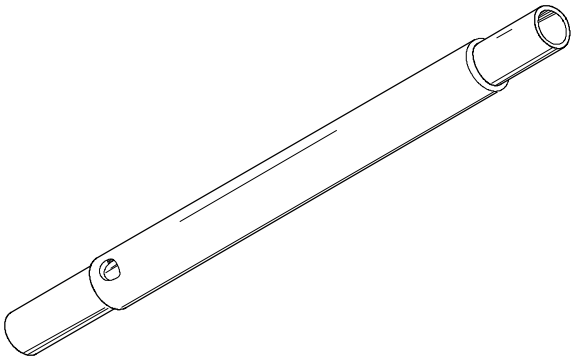

Figure 10

Note: During “AUTO” operation, the orifice end of the tube should be inserted in the hole in the hopper.

Taylor Quality Control

These units use a solid state control called the T.Q.C. The purpose of this solid state control is to sense the viscosity (thickness) of the product in the freezing cylinder. With the power switch in the “AUTO” position, the T.Q.C. will automatically keep the mix in the freezing cylinder at the proper viscosity and ready for serving.

Indicator Light - “Mix Low”

A mix level indicating light is located at the front of the machine. When the light is on, it indicates that the mix hopper has a low supply of mix and should be refilled as soon as possible. Always maintain at least 2” (5.1 cm) of mix in the hopper. If you neglect to add mix, a freeze-up may occur. This will cause eventual damage to the beater assembly and to the freezer door.

Mix Refrigeration Switch

The mix refrigeration switch is located under the control channel and is used for several purposes:

1. For the unit to operate in the “AUTO” mode, the mix refrigeration switch must be “ON”.
2. For the separate hopper refrigeration system to operate, the mix refrigeration switch must be in the “ON” or the “STANDBY” position.
3. For the cylinder temperature retention system to operate, the power switch must be in the “AUTO” position and the mix refrigeration switch must be in the “STANDBY” position.

Separate Hopper Refrigeration (SHR)

This feature incorporates the use of a separate small refrigeration system to chill (on a limited basis) and to maintain the mix in the hopper to under 40_F (4.4_C) and assures bacterial control. To activate this system, place the power switch in the “AUTO” position and the mix refrigeration switch in the “ON” position. To operate this system in the “STANDBY” mode, place the power switch in the “AUTO” position and the mix refrigeration switch in the “STANDBY” position.

090526

Cylinder Temperature Retention (CTR)

To maintain a good quality product during long “No Sale” periods, it will be necessary to warm the product in the freezing cylinder to approximately 35° to 40°F (1.7° to 4.4°C). This will prevent overbeating and product breakdown. The CTR is used in conjunction with the SHR to insure that the mix in the freezing cylinder is refrigerated during the “STANDBY” mode of operation.

To operate the “STANDBY” mode of operation:

Place the power switch in the “AUTO” position and the mix refrigeration switch in the “STANDBY” position. With sanitized hands, remove the feed tube. Turn it over and place the end without the hole into the mix inlet hole.

To resume normal operation:

Leave the power switch in the “AUTO” position and place the mix refrigeration switch in the “AUTO” position. When the unit cycles off, the product in the freezing cylinder will be the correct viscosity. With sanitized hands, remove the feed tube. Turn it over and place the end with the hole into the mix inlet hole.

Section 6 Operating Procedures

The Model 150 has been selected to illustrate the pictured step-by-step operating procedures. All models in this manual are similar. They each have a 1.5 quart (1.4 liter) capacity freezing cylinder. The mix flows by gravity from the hopper to the freezing cylinder through an feed tube.

The Model 150 is a console model with a single spout door.

The Model 152 is a counter model with a single spout door.

The Model 162 is a counter model and the Model 168 is a console model. Both have three spout doors. Two individual flavors are available from the end spouts, and an equal combination of both is dispensed through the center spout to create a twist effect.

For the Models 162 and 168, duplicate the procedures where they apply for the second freezing cylinder.

We begin our instructions at the point where we enter the store in the morning and find the parts disassembled and laid out to air dry from the previous night's cleaning.

These opening procedures will show you how to assemble these parts into the freezer, sanitize them, and prime the freezer with fresh mix in preparation to serve your first portion.

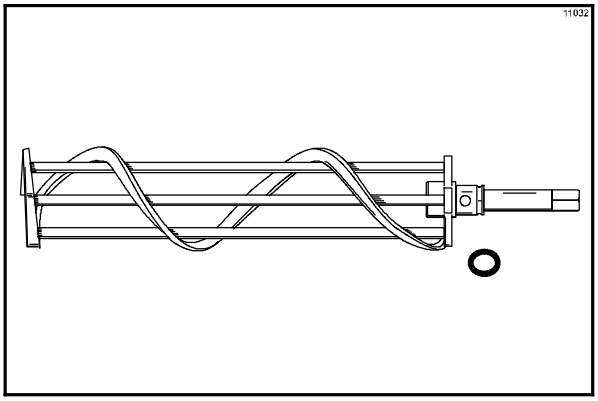

Figure 11

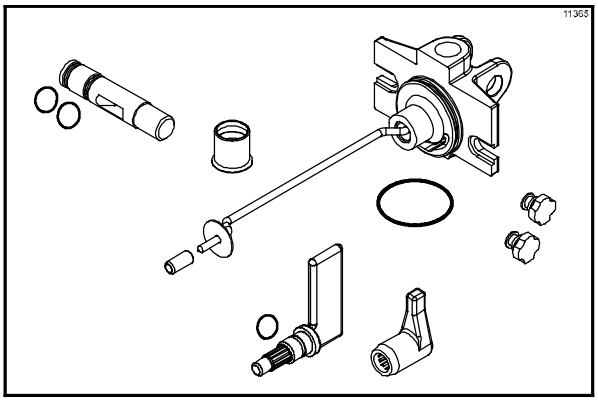

Figure 12

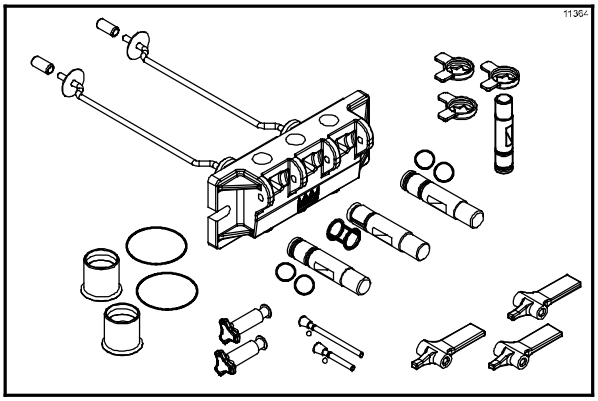

Figure 13

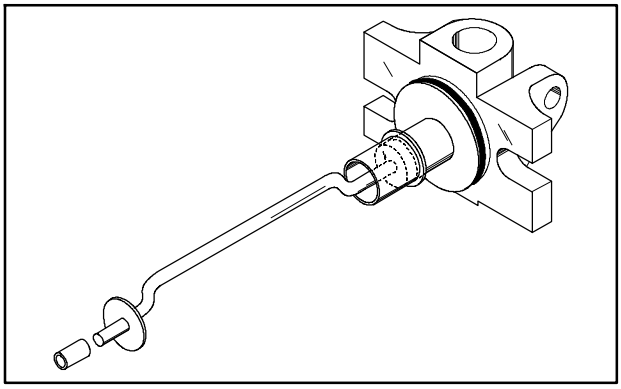

Figure 14

If you are disassembling the machine for the first time or need information to get to the starting point in our instructions, turn to page 26, "Disassembly", and start there.

Assembly

Note: When lubricating parts, use an approved food grade lubricant (example: Taylor Lube).

Step 1
Install the beater assembly. Slide the small, thick o-ring into the groove on the drive shaft of the beater assembly. Apply an even coat of Taylor Lube to the o-ring and the shaft. **Do not lubricate the hex end.**

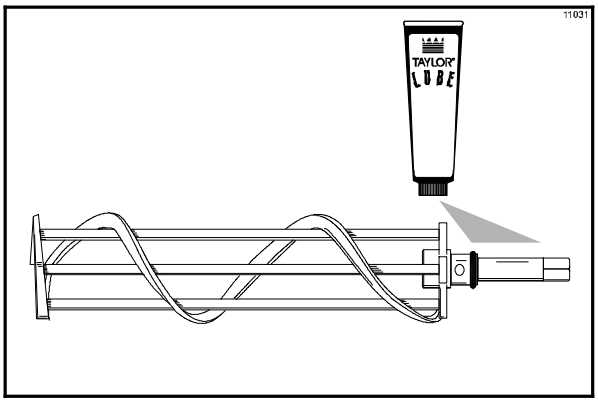

Figure 15

Insert the beater assembly through the rear shell bearing at the back of the freezing cylinder and engage the hex end firmly into the female socket. When properly seated, the beater will not protrude beyond the front of the freezing cylinder.

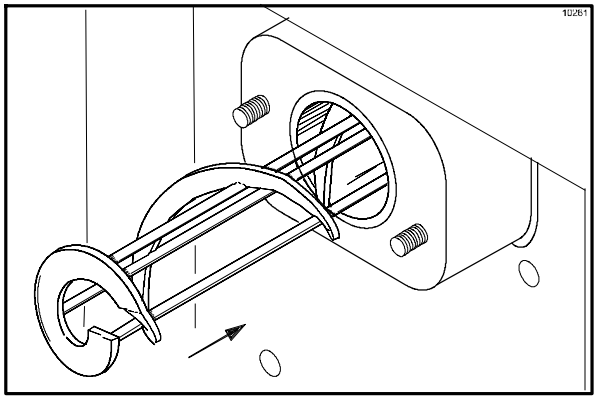

Figure 16

Repeat this step for the second freezing cylinder on Models 162/168.

Step 2
Assemble the freezer door. Place the large o-ring(s) into the groove(s) on the back of the freezer door and lubricate with Taylor Lube.

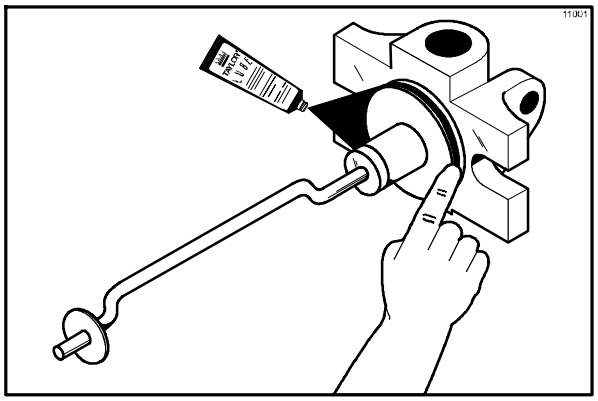

Figure 17

Slide the front bearing(s) over the baffle rod(s) so the flanged edge is against the door. Place the white plastic guide bearing(s) on the end of the baffle rod(s).

Do not lubricate the front bearing(s) or the guide bearing(s).

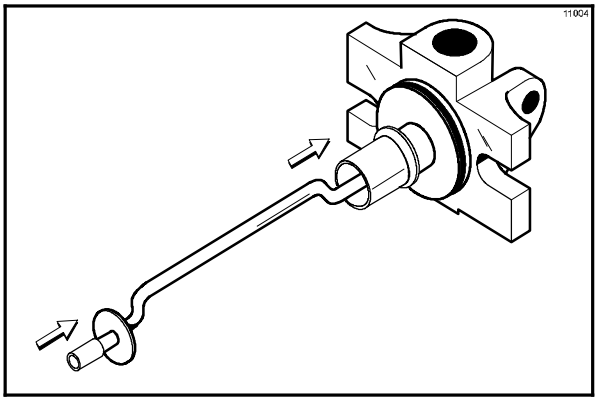

Figure 18

Step 3
Slide the slotted portion of the handscrews into the slots in the freezer door.

Step 4
Install the freezer door. With both hands, hold the sides of the freezer door and insert the baffle rod(s) into the center of the beater assembly(ies). The white guide bearing(s) must fit securely in the hole(s) of the drive shaft(s). Finger-tighten the handscrews equally to insure that the door is snug. **Do not over-tighten.**

Note: The freezer door is in the correct position when the door spout is on the bottom.

Step 5
Install the draw valve(s). Slide the two o-rings into the grooves on the draw valve(s) and lubricate with Taylor Lube.

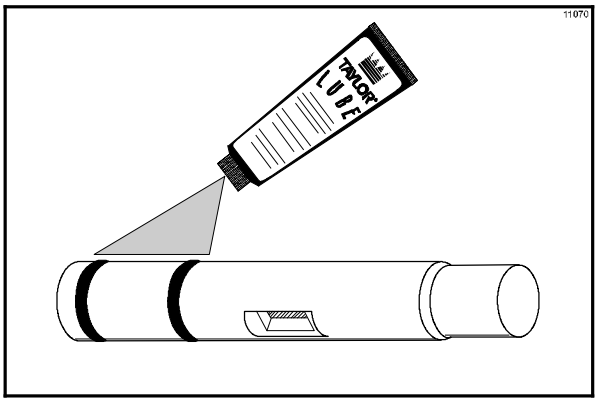

Figure 19

Note: For the Models 162/168, install the valve seal in the grooves on the center draw valve and lubricate with Taylor Lube. This special seal will prevent mix from one freezing cylinder from traveling into the second cylinder.

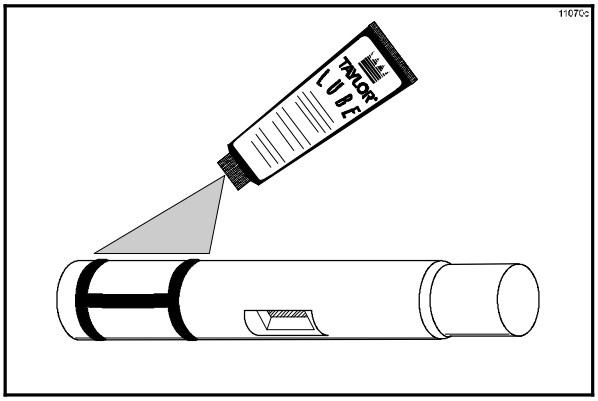

Figure 20

Lubricate the inside of the freezer door spout(s) from the **bottom**. Insert the draw valve(s) into the freezer door from the **bottom.**

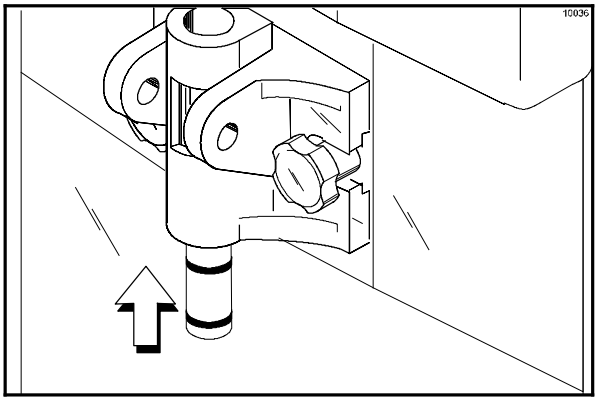

Figure 21

Note: The draw valve is installed correctly when the slotted opening in the draw valve is visible through the "window" of the freezer door.

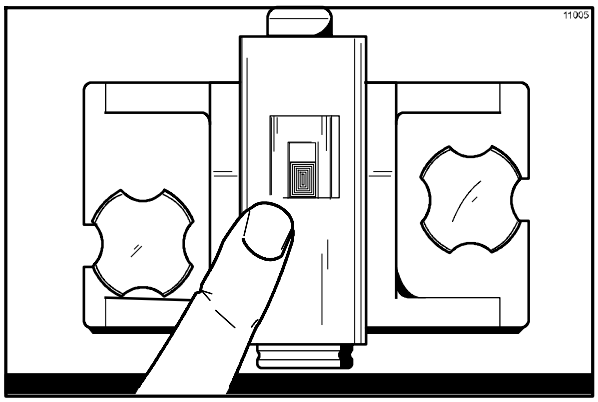

Figure 22

Step 6
Install the draw valve handle. Insert the valve lifter arm through the slotted opening in the draw valve and align the other end with the cross holes of the freezer door.

Hint: The valve lifter arm may be aligned with the left or right cross hole. The draw valve handle will be placed through the opposite cross hole of the valve lifter arm.

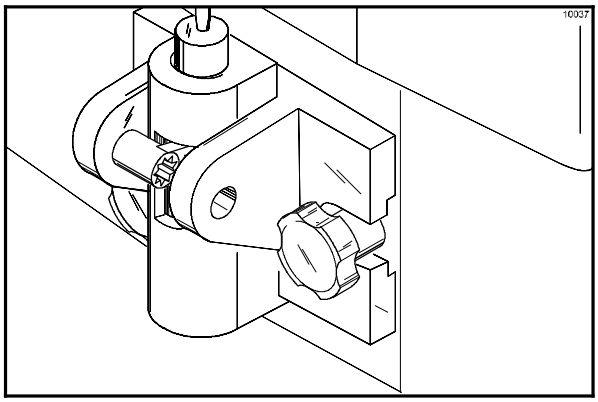

Figure 23

Slide the o-ring into the groove on the draw valve handle and lubricate with Taylor Lube.

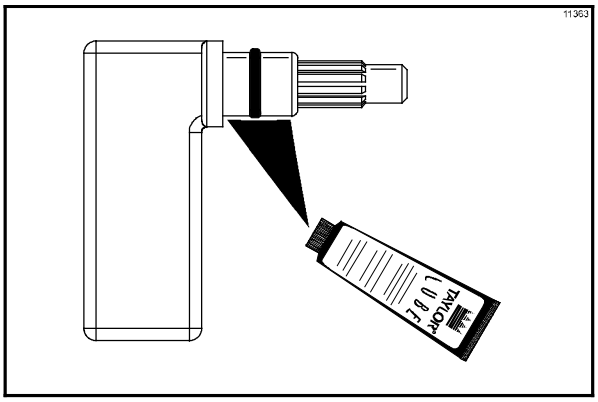

Figure 24

Insert the draw valve handle through the opposite cross hole and into the opening of the valve lifter arm.

Hint: The draw valve handle can be assembled at varied vertical positions. Choose an angle which is comfortable for you. The draw valve must be raised completely when the draw valve handle is down.

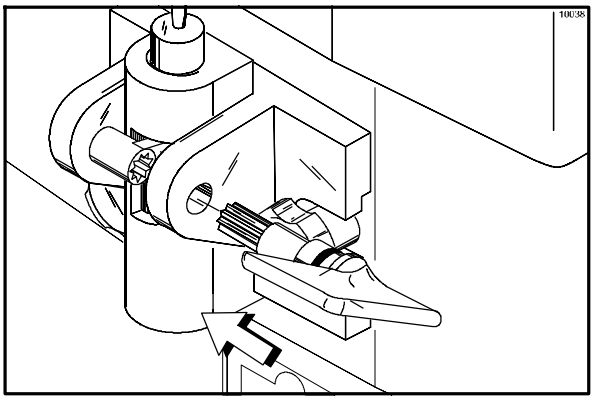

Figure 25

Note: For Models 162/168, slide the o-ring onto each pivot pin and lubricate with Taylor Lube.

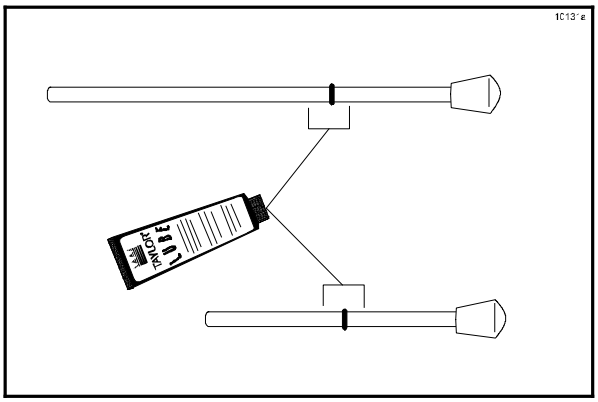

Figure 26

Note: Models 162/168 have three draw handles. Slide the tip of the draw handle into the slot of the draw valve, starting from the right. Slide the short pivot pin through the far right draw handle. Slide the long pivot pin through the far left and middle draw handles.

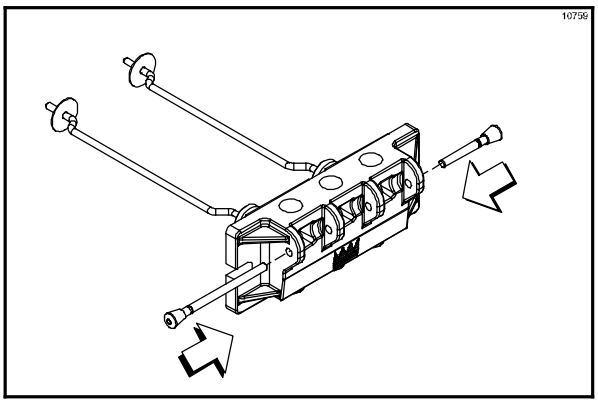

Figure 27

Step 7
Snap the design cap(s) over the bottom of the freezer door spout(s).

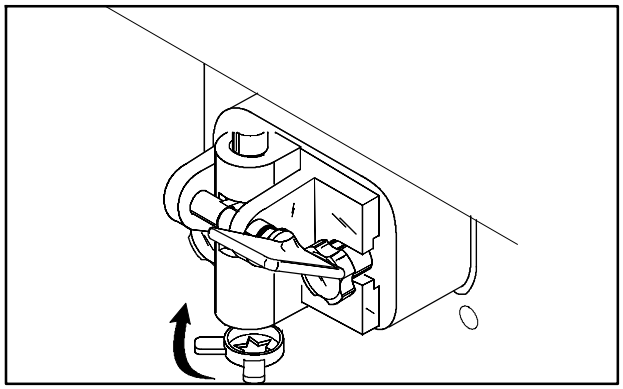

Figure 28

Step 8
Lay the feed tube(s) in the bottom of the mix hopper(s).

Sanitizing

Step 1
Prepare an approved 100 PPM sanitizing solution (examples: Kay-5® or Stera-Sheen®). USE WARM WATER AND FOLLOW THE MANUFACTURER'S SPECIFICATIONS.

Step 2
Pour one gallon (3.8 liters) of the sanitizing solution into the hopper and allow it to flow into the freezing cylinder.

Step 3
While the solution is flowing into the freezing cylinder, brush-clean the mix hopper, mix level float stem, mix level float, mix inlet hole, and feed tube.

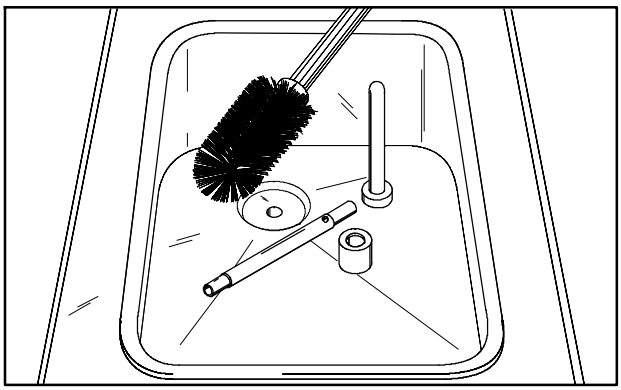

Figure 29

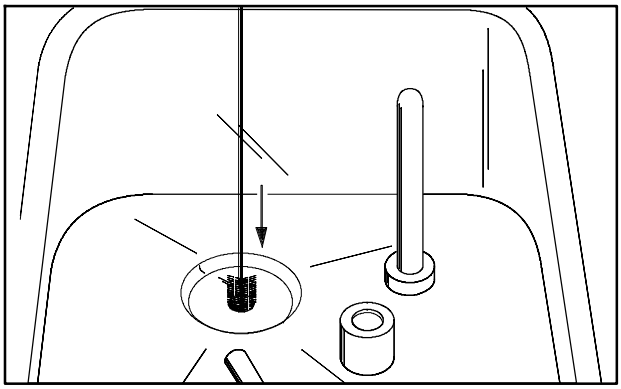

Figure 30

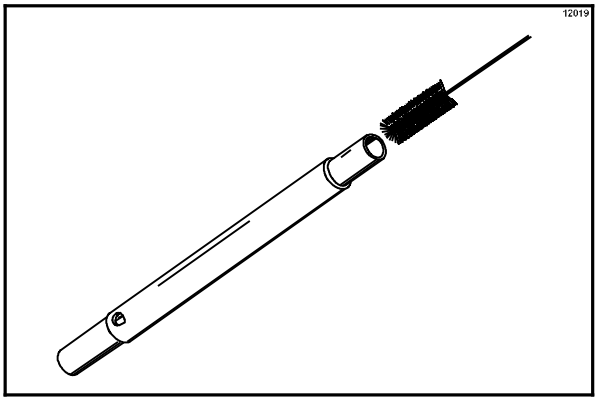

Figure 31

Step 4
Press the reset button.

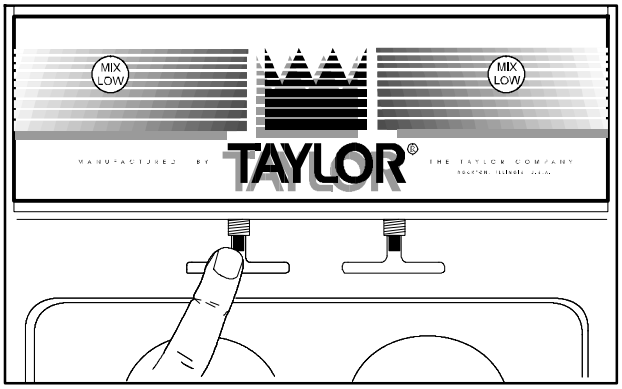

Figure 32

Step 5
Place the power switch in the “WASH” position. This will cause the sanitizing solution in the freezing cylinder to be agitated. Allow it to agitate for five minutes.

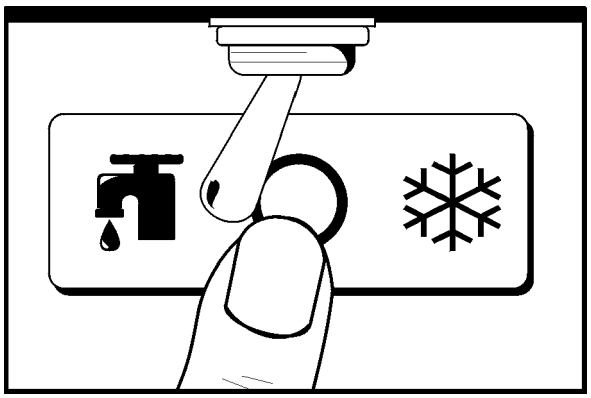

Figure 33

Step 6
Place an empty pail beneath the door spout and raise the draw valve. Draw off all of the sanitizing solution. When the sanitizer stops flowing from the door spout, lower the draw valve and place the power switch in the “OFF” position.

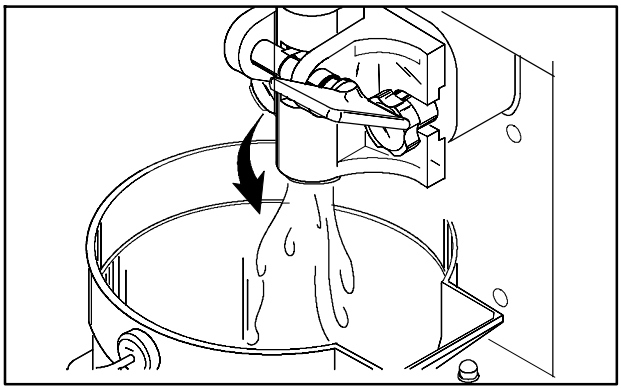

Figure 34

Note: On Models 162/168, momentarily pull down the center draw handle to sanitize the center door spout.

Step 7
With sanitized hands, stand the feed tube in the corner of the mix hopper. Place the mix level float on the mix level float stem.

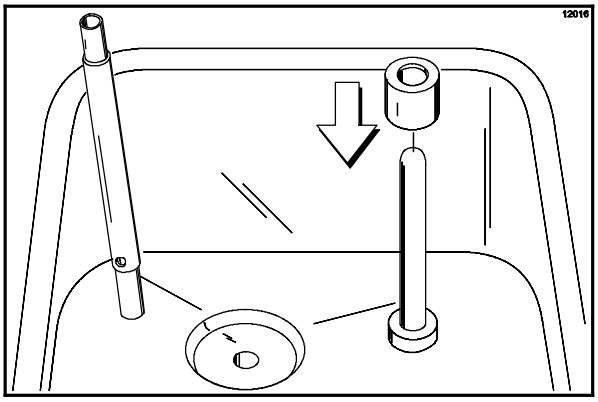

Figure 35

Repeat Steps 1 through 7 for the second freezing cylinder on Models 162/168.

Priming

Prime the machine as close as possible to the time of first product draw.

Step 1
With a pail beneath the door spout, raise the draw valve. Fill the mix hopper with **fresh** mix. (Maximum hopper capacity is 8 quarts [7.6 liters].) Allow the mix to flow into the freezing cylinder. This will force out any remaining sanitizing solution. When full strength mix is flowing from the door spout, lower the draw valve.

Note: Use only FRESH mix when priming the freezer.

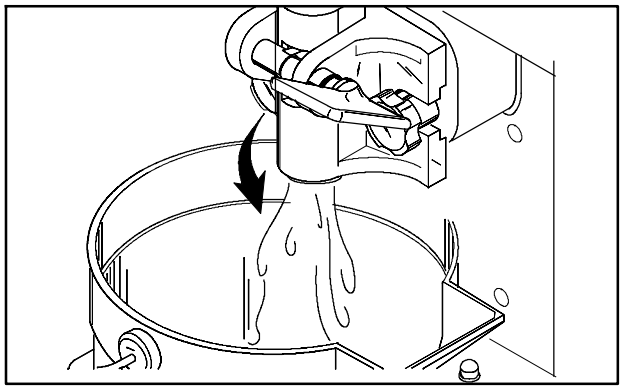

Figure 36

Step 2
When the mix has stopped bubbling down into the freezing cylinder, install the feed tube in the mix inlet hole. Make sure the small hole in the feed tube is down.

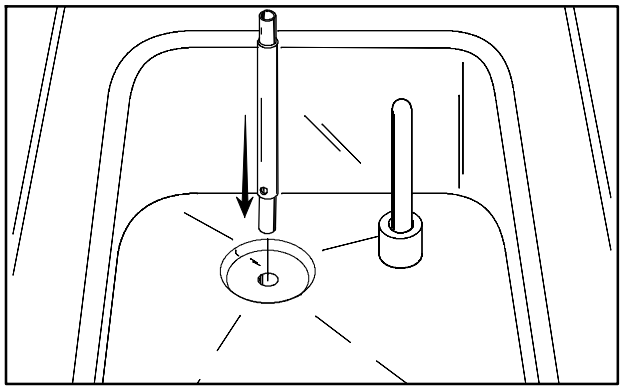

Figure 37

Step 3
Momentarily raise the draw switch to activate the refrigeration cycle. Place the power switch in the "AUTO" position. When the unit cycles off, the product will be ready to serve.

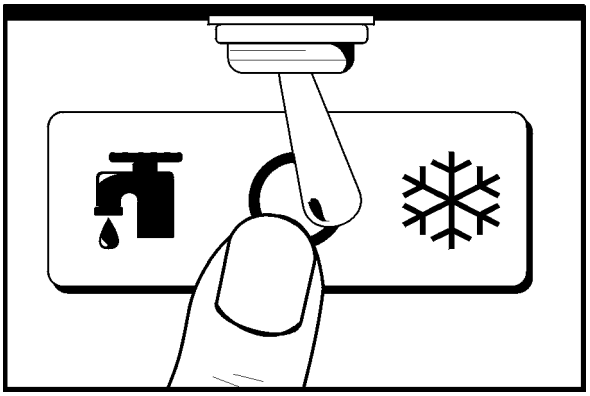

Figure 38

Step 4
Place the mix hopper cover in position.

Repeat Steps 1 through 4 for the second freezing cylinder on Models 162/168.

Step 5
Install the front drip tray and splash shield under the freezer door.

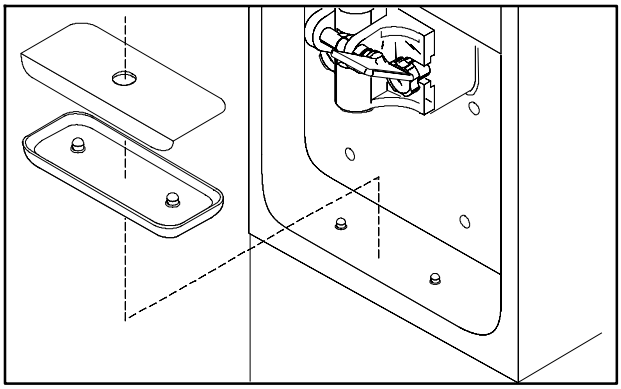

Figure 39

Step 6
Slide the rear drip pan into the hole in the side panel.

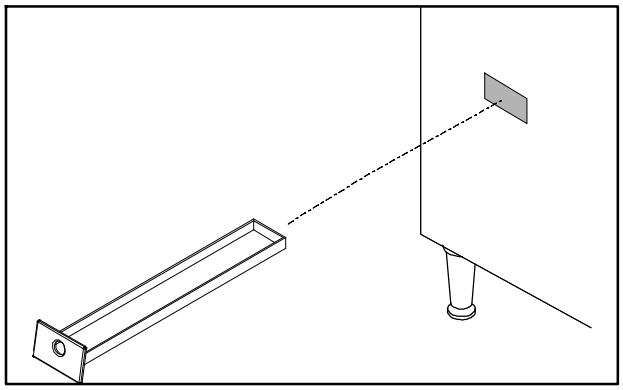

Figure 40

Closing Procedure

To disassemble the Models 150/152/162/168, the following items will be needed:

- Two cleaning pails
- Sanitized stainless steel rerun can with lid
- Necessary brushes (provided with freezer)
- Cleaner
- Single service towels

Draining Product From the Freezing Cylinder

Step 1
Place the power switch in the "OFF" position as far ahead of cleaning time as possible. This will allow frozen product to soften for easier cleaning.

Step 2
Lift the hopper cover. Remove the feed tube and mix level float. Take them to the sink for cleaning.

Step 3
If local health codes permit the use of rerun, place a sanitized, NSF approved stainless steel rerun container beneath the door spout. Place the power switch in the "WASH" position and raise the draw valve. When all the product stops flowing from the door spout, lower the draw valve and place the power switch in the "OFF" position. Place a sanitized lid on the rerun container and place it in the walk-in cooler.
(**Note:** For additional information regarding the proper use of rerun, see item 5 on page 27.)

Note: If local health codes DO NOT permit the use of rerun, the product must be discarded. Follow the instructions in the previous step, except drain the product into a mix pail and properly discard the mix.

ALWAYS FOLLOW LOCAL HEALTH CODES.

Repeat Steps 1 through 3 for the second freezing cylinder on Models 162/168.

Rinsing

Step 1
Pour one gallon (3.8 liters) of **cool**, clean water into the mix hopper. With the brushes provided, scrub the mix hopper, the mix level float stem and the mix inlet hole.

Step 2
With a pail beneath the door spout, place the power switch in the "WASH" position and raise the draw valve. Drain all the rinse water from the freezing cylinder. When the rinse water stops flowing from the door spout, lower the draw valve and place the power switch in the "OFF" position.

Repeat this procedure until the rinse water being drawn from the freezing cylinder is **clear**.

Repeat Steps 1 and 2 for the second freezing cylinder on Models 162/168.

Cleaning

Step 1
Prepare an approved cleaning solution (examples: Kay-5® or Stera-Sheen®). USE WARM WATER AND FOLLOW THE MANUFACTURER'S SPECIFICATIONS.

Step 2
Pour one gallon (3.8 liters) of the cleaning solution into the mix hopper and allow it to flow into the freezing cylinder.

Step 3
While the solution is flowing into the freezing cylinder, brush-clean the mix hopper, mix level float stem and mix inlet hole.

Step 4
Place the power switch in the "WASH" position. This will cause the cleaning solution in the freezing cylinder to agitate.

Step 5
Place an empty pail beneath the door spout and raise the draw valve. Draw off all the cleaning solution. When the solution stops flowing from the door spout, lower the draw valve and place the power switch in the "OFF" position.

Repeat Steps 1 through 5 for the other side of the freezer on Models 162/168.

Disassembly

Step 1

Make sure the power switch is in the OFF position. Failure to follow this instruction may result in severe personal injury from hazardous moving parts.

Step 2
Remove the handscrews and the freezer door. Remove the beater assembly(ies) from the freezing cylinder(s) and take these parts to the sink for cleaning.

Step 3
Remove the front drip tray and the splash shield from the freezer. Take them to the sink for cleaning.

Brush Cleaning

Step 1
Prepare a sink with an approved cleaning solution. USE WARM WATER AND FOLLOW THE MANUFACTURER'S SPECIFICATIONS.

IMPORTANT: Follow label directions, as too STRONG of a solution can cause parts damage, while too MILD of a solution will not provide adequate cleaning.) Make sure all brushes provided with the freezer are available for brush cleaning.

Step 2
Remove the o-ring(s) from the drive shaft(s) of the beater assembly(ies).

Note: To remove the o-rings, use a single service towel to grasp the o-ring. Apply pressure in an upward direction until the o-ring pops out of its groove. With the other hand, push the top of the o-ring forward, and it will roll out of the groove and can be easily removed. If there is more than one o-ring to be removed, always remove the rear o-ring first. This will allow the o-ring to slide over the forward rings without falling into the open grooves.

Step 3
From the freezer door, remove the design cap, draw valve handle, valve lifter arm, and draw valve. Remove all o-rings.

Models 162/168: From the freezer door, remove design caps, pivot pins, draw handles, draw valves, and the center draw valve. Remove all o-rings.

Step 4
Remove the large o-ring(s), front bearing(s), and guide bearing(s) from the back of the freezer door.

Step 5
Return to the freezer with a small amount of cleaning solution. With the black bristle brush, brush clean the rear shell bearing(s) at the back of the freezing cylinder(s).

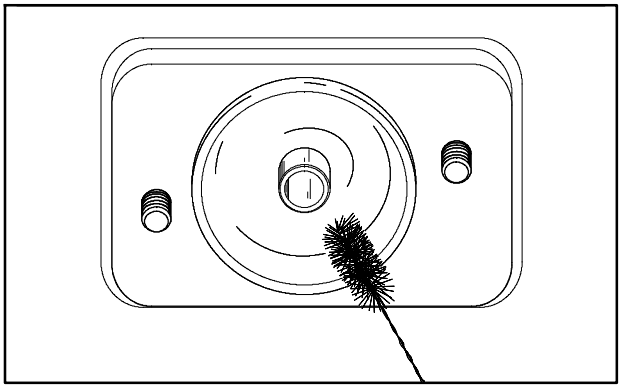

Figure 41

Step 6
Remove the rear drip pan from the side panel and take it to the sink for cleaning.

Note: If the drip pan is filled with an excessive amount of mix, this is an indication that the drive shaft o-ring of the beater assembly should be replaced or properly lubricated.

Step 7
Thoroughly brush clean all disassembled parts in the cleaning solution. Make sure all lubricant and mix film is removed. Take particular care to brush clean the draw valve core(s) in the freezer door. Place all the cleaned parts on a clean, dry surface to air dry overnight.

Step 8
Wipe clean all exterior surfaces of the freezer.

Section 7 Important: Operator Checklist

During Cleaning and Sanitizing

ALWAYS FOLLOW LOCAL HEALTH CODES.

Cleaning and sanitizing schedules are governed by federal, state, or local regulatory agencies, and must be followed accordingly. If the unit has a "Standby mode", it must not be used in lieu of proper cleaning and sanitizing procedures and frequencies set forth by the ruling health authority. The following check points should be stressed during the cleaning and sanitizing operations.

CLEANING AND SANITIZING MUST BE PERFORMED DAILY.

Troubleshooting Bacterial Count

☐ 1. Thoroughly clean and sanitize the machine regularly, including complete disassembly and brush cleaning.

☐ 2. Use all brushes supplied for thorough cleaning. The brushes are specially designed to reach all mix passageways.

☐ 3. Use the smaller, white bristle brush to clean the mix inlet hole which extends from the mix hopper down to the rear of the freezing cylinder.

☐ 4. Use the black bristle brush to thoroughly clean the rear shell bearing located at the rear of the freezing cylinder. Be sure to have a generous amount of cleaning solution on the brush.

☐ 5. IF LOCAL HEALTH CODES PERMIT THE USE OF RERUN, make sure the mix rerun is stored in a sanitized, covered stainless steel container and is used the following day. DO NOT prime the machine with rerun. When using rerun, skim off the foam and discard. Mix the rerun with fresh mix in a ratio of 50/50 during the day's operation.

☐ 6. On a designated day of the week, run the mix as low as feasible and discard after closing. This will break the rerun cycle and reduce the possibility of high bacteria and coliform counts.

☐ 7. Properly prepare the cleaning and sanitizing solutions. Read and follow label directions carefully. Too strong of a solution may damage the parts and too weak of a solution will not do an adequate job of cleaning or sanitizing.

☐ 8. The temperature of the mix in the mix hopper and walk-in cooler should be below 40°F. (4.4°C.).

Regular Maintenance Checks

☐ 1. Check the rear shell bearing for signs of wear (excessive mix leakage in rear drip pan) and be certain it is properly cleaned.

☐ 2. Using a screwdriver and cloth towel, keep the rear shell bearing and the female hex drive socket clean and free of lubricant and mix deposits.

☐ 3. Dispose of o-rings or seals if they are worn, torn, or fit too loosely, and replace with new ones.

☐ 4. Follow all lubricating procedures as outlined in "Assembly".

☐ 5. If your machine is air cooled, check the condenser for an accumulation of dirt and lint. A dirty condenser will reduce the efficiency and capacity of the machine. Condensers should be cleaned **monthly** with a soft brush. **Never** use screwdrivers or other metal probes to clean between the fins. Failure to comply may result in electrocution.
Note: For machines equipped with an air filter, it will be necessary to vacuum clean the filters on a monthly schedule.

☐ 6. On the auxiliary refrigeration system, check the condenser for accumulation of dirt and lint. A dirty condenser will reduce the refrigeration capacity of the mix hopper. Condensers must be cleaned **monthly** with a soft brush. **Never** use screwdrivers or other metal probes to clean between the fins. Failure to comply may result in electrocution.

Winter Storage

If the place of business is to be closed during the winter months, it is important to protect the freezer by following certain precautions, particularly if the building is subject to freezing conditions.

Disconnect the freezer from the main power source to prevent possible electrical damage.

Your local Taylor distributor can perform this service for you.

Wrap detachable parts of the freezer such as the beater assembly and freezer door, and place them in a protected dry place. Rubber trim parts and gaskets can be protected by wrapping them with moisture-proof paper. All parts should be thoroughly cleaned of dried mix or lubrication accumulations which attract mice and other vermin.

Section 8 Troubleshooting Guide

PROBLEM	PROBABLE CAUSE	REMEDY	PAGE REF.
1. No product being dispensed.	a. The power switch is in the “OFF” position.	a. Place the power switch in the “AUTO” position.	24
	b. The mix level is inadequate in the mix hopper.	b. Fill the mix hopper with mix.	24
	c. The beater motor overloaded.	c. Reset the freezer.	16
	d. The unit is unplugged at the wall receptacle.	d. Plug in the power cord. Press the reset button.	16
	e. The circuit breaker is tripped or the fuse is blown.	e. Place the circuit breaker in the “ON” position, or replace the fuse. Press the reset button.	16
	f. The freezer door is incorrectly assembled.	f. See “Operating Procedures” for proper installation.	19
	g. Product is being drawn off in excess of the freezer’s capacity.	g. Stop drawing product and allow the unit to recover.	- - -
2. The machine will not operate in the “AUTO” mode.	a. The unit is unplugged.	a. Plug in the power cord; press the reset button.	16
	b. The refrigeration system is not activated.	b. On T.Q.C. units, momentarily raise the draw switch to activate the refrigeration system.	24
	c. The circuit breaker is tripped, or the fuse is blown.	c. Place the circuit breaker in the “ON” position, or replace the fuse. Press the reset button.	16
	d. The beater motor overloaded, causing a loss of power to the power switch.	d. Reset the freezer.	16
3. The product is too stiff.	a. The temperature control or the T.Q.C. is set too cold.	a. Adjust the temperature control. Do not set the temperature colder than 18°F (–8°C). If T.Q.C., contact service technician.	16

PROBLEM	PROBABLE CAUSE	REMEDY	PAGE REF.
4. The product is too soft.	a. The temperature control or the T.Q.C. is set too warm.	a. Adjust the temperature control. If T.Q.C., contact service technician.	16
	b. The feed tube is not installed.	b. Install the feed tube in the mix inlet hole at the bottom of the mix hopper.	24
	c. Out-drawing the freezer's capacity.	c. Two 4 oz. (113.4 gram) servings in one minute.	- - -
5. The freezing cylinder walls are scored.	a. Operating freezer without the front bearing on the freezer door.	a. Install the front bearing on the freezer door.	19
	b. The gear unit or the direct drive is out of alignment.	b. Contact service technician.	- - -
6. Excessive leakage in rear drip pan.	a. A worn or defective o-ring is on the beater drive shaft.	a. Replace o-rings every 3 months.	32
	b. The rear shell bearing is worn.	b. Contact service technician.	- - -
	c. Incorrect lubricant was used.	c. Use food grade lubricant (example: Taylor Lube).	19
	d. Inadequate lubrication of beater drive shaft.	d. Lubricate the beater drive shaft properly.	19
7. The draw valve is leaking.	a. Incorrect lubricant was used.	a. Use food grade lubricant (example: Taylor Lube).	20
	b. Worn or defective o-rings are on the draw valve.	b. Replace o-rings every 3 months.	32
	c. Inadequate lubrication of draw valve.	c. Lubricate the draw valve properly.	20
8. Product is not feeding into the freezing cylinder.	a. The mix level is inadequate in the mix hopper.	a. Fill the mix hopper with mix.	24
	b. The mix inlet hole is frozen.	b. Contact service technician.	16

PROBLEM	PROBABLE CAUSE	REMEDY	PAGE REF.
9. The unit goes out on overload excessively.	a. There are too many appliances plugged into the circuit. b. An extension cord has been placed between the power cord and the wall receptacle.	a. A **separate** 20 amp. circuit is needed for the freezer to operate properly. b. If the extension cord is used, it must match the power cord in size of circuit ampacity.	- - - - - -
10. **Models 162 and 168:** Mix from one freezing cylinder bleeds over to the second cylinder.	a. The center draw valve seal is worn, or is improperly lubricated.	a. Lubricate properly and replace seal every 3 months.	20 / 32

Section 9 Parts Replacement Schedule

PART DESCRIPTION	EVERY 3 MONTHS	EVERY 6 MONTHS	ANNUALLY	QTY.	
				150/152	162/168
Beater Drive Shaft O-Ring	X			1	2
Freezer Door O-Ring	X			1	2
Freezer Door Front Bearing	X			1	2
Freezer Door Guide Bearing	X			1	2
Draw Valve O-Ring	X			2	4
Draw Valve Handle O-Ring	X			1	-
Center Draw Valve Seal	X			-	1
Pivot Pin O-Ring	X			-	2
Black Bristle Brush, 1” x 2”		Inspect & Replace if Necessary	Minimum	1	1
Double Ended Brush		Inspect & Replace if Necessary	Minimum	1	1
White Bristle Brush, 1” x 2”		Inspect & Replace if Necessary	Minimum	1	1
White Bristle Brush, 3” x 7”		Inspect & Replace if Necessary	Minimum	1	1

DESCRIPTION	PART NUMBER	150 QTY.	152 QTY.	162 QTY.	168 QTY.	WARR. CLASS	REMARKS	PARTS UPDATE
BEARING-FRONT	023262	1	1	2	2	000		
BEARING-GUIDE	014496	1	1	2	2	000		
BEARING-REAR SHELL *150-52-68*	023648	1	1	2	2	000		
+COLLAR-REAR BEARING	025564	1	1	2	2	000		
+NUT-REAR BEARING *150-52-68*	023647	1	1	2	2	000		
+TAB-BEARING LOCK *150-2-68*	025027	1	1	2	2	000		
BEARING-UNIT REAR	024764	1				103		
BEATER A. *150-2-162-168*	X24689	1	1	2	2	103		
+O-RING-13/16 OD X .139W	021278	1	1	2	2	000		
BELT-AX23	041137			2		000		
BELT-POLY V-280J10	025776		1			000		
BELT-POLY V-580J10	025551	1				000		
BELT-POLY V-460J10	028182				2	000		
BLOCK-TERMINAL 2P L1,N	039421			2		103		
BLOCK-TERMINAL 2P	039422				2	103		
BLOCK-TERMINAL 5 POLE	024329	1	1	2	4	103		
BLOCK-TERMINAL 7 POLE	025156			2	2	103	115-60-1	
BRUSH-DOUBLE ENDED-PUMP&FEED T	013072	1	1	1	1	000		
BRUSH-DRAW VALVE 1"ODX2"X17"L	013073	1	1	1	1	000		
BRUSH-MIX PUMP BODY-3"X7"WHITE	023316	1	1	1	1	000		
BRUSH-REAR BRG 1IN.DX2IN.LGX14	013071	1	1	1	1	000		
CAP-DESIGN-1.010"ID-6 POINT	014218	1	1	3	3	000		
CASTER-RIGID 3 IN. WHL	012226	2			2	103		
CASTER-SWIVEL 3 IN. WHEEL	012227	2			2	103		
COMPRESSOR AKA9462ZXD-AK172ET	049302-	1	1	2	2	512	MAIN - TECUMSEH HP62	
+CAPACITOR-RUN- 25UF/370VAC	023739	1	1	2	2	103	115-60-1	
+CAPACITOR-START- 72-88UF/250V	039557-27	1	1	2	2	103	115-60-1	
+RELAY-START-COMPRESSOR	045432-12	1	1	2	2	103	115-60-1	
+CAPACITOR-RUN- 15UF/370V	027087	1	1	2	2	103	230-60-1	
+CAPACITOR-START- 72-88UF/330	039567	1	1	2	2	103	230-60-1	
+RELAY-START-COMPRESSOR	048150	1	1	2	2	103	230-60-1	
COMPRESSOR-TL2.5F-R134A	047701-	1	1			512	SHR - DANFOSS	

+ Available Separately

DESCRIPTION	PART NUMBER	150 QTY.	152 QTY.	162 QTY.	168 QTY.	WARR. CLASS	REMARKS	PARTS UPDATE
+RELAY-START-COMPRESSOR	027714-12	1	1			103	115-60-1	
+RELAY-START-COMPRESSOR-TL3G	047702-27	1	1			103	230-60-1	
+CAPACITOR-START-60UF-220/275V	047703	1	1			103	230-60-1	
CONDENSER-AC-7X6X1.25-2 ROW	027155	1	1			103	SHR	
CONDENSER-AC-12LX14HX1.87T 3RW	046556	1	1			103	A/C MAIN	
CONDENSER-AC-9HX24WX2.5T-4 ROW	047146			1		103		
CONDENSER-AC-15LX14HX2.57-4R	047255				1	103		
CONTROL-TEMP.	028914	2	2			103	SHR & STANDBY	
CONTROL-VISCOSITY-WATT	X37260SER1	1	1	2	2	103	115 VOLT	
CONTROL-VISCOSITY-WATT	X37260SER2	1	1	2	2	103	230 VOLT	
CORD-POWER	045666	1	1			103	115-60-1	
CORD-POWER	025340-27	1	1			103	230-60-1	
COVER A.-HOPPER *M150-152	X48690	1	1			103		
COVER A.-HOPPER *162-168*	X37963-SER			1	1	103	INCLUDES KNOB	
KNOB-MIX COVER	025429	1	1	1	1	103		
DAMPER A.-FOR USE ON 25W ONLY	X20320	1				103	FAN MOTOR	
DECAL-CLEAN INST.-HOPPER	019029	1	1	1	1	000		
DECAL-DEC-TAYLOR 150/152	047667	1	1			000		
DECAL-DEC-TAYLOR 162/168	047666			1	1	000		
DECAL-MIX REF. STANDBY OFF-ON	022177	1	1	1	1	000		
DECAL-TROUBLESHOOTING	038374	1	1	1	1	000		
DECAL-WARNING *PANEL*	036529	3	3	3	3	000		
DECAL-WASH-OFF-AUTO	014502	1	1	2	2	000		
DIAGRAM-WIRING *150*	050416-	1	1			000		
DIAGRAM-WIRING	050205-			1	1	000		
DOOR A.-1 SPOUT-1.5 QT	X38959-SER	1	1			103		
+O-RING-2-3/4 OD X .139W	019998	1	1			000		
+ARM-VALVE LIFTER	024761	1	1			103		
+HANDLE-DRAW	024762	1	1			103		
+O-RING-3/4 OD X .103W	015835	1	1			000		
VALVE-DRAW *150-2*	024763	1	1			103		
+O-RING-7/8 OD X .103W	014402	2	2			000		

+ Available Separately

DESCRIPTION	PART NUMBER	150 QTY.	152 QTY.	162 QTY.	168 QTY.	WARR. CLASS	REMARKS	PARTS UPDATE
DOOR A.-3SPT 1.5QT VALOX W/BAF	X56906SER1			1	1		S/N J3010000 & UP - IF PRIOR TO J301 USE X56906-SER KIT W/STUD NUTS	
+HANDLE-DRAW VALVE	030564			3	3	103		
+O-RING-2-3/4 OD X .139W	019998			2	2	000	DOOR GASKET/SEAL	
+PIN A.-PIVOT-LONG	X38538			1	1	103		
+O-RING-5/16 OD X .070W	016272			1	1	000		
+PIN A.-PIVOT-SHORT	X38539			1	1	103		
+O-RING-5/16 OD X .070W	016272			1	2	000		
+VALVE-DRAW *150-2*	024763			2	2	103		
+O-RING-7/8 OD X .103W	014402							
+VALVE-DRAW -CENTER	031164			1	1	103		
+SEAL-DRIVE SHAFT	030930			1	1	000		
DOOR A.-3 SPOUT	X30753-SER			1	1	103	S/N J212 & PRIOR MUST USE X56906-SER KIT TO UPDATE TO NEW STYLE DOOR	
DRYER-CAP. TUBE .026 ID X 11FT	048894	1	1			000	SHR	
DRYER-CAP. TUBE-HP62/R134A	047699			1	1	000	SHR	
DRYER-CAP. TUBE-HP62/R134A	048255			1	1	000	SHR 115-60-1 ONLY	
DRYER-FILTER-HP62-3/8 X 1/4S	048901	1	1	2	2	000		
DVD-OPS TRAIN VIDEO*TAYLORMATE	037665-DVD	1	1	1	1	000		
FLOAT A.-MIX LEVEL *142*	X39690	1	1	2	2	103		
GASKET-HOPPER COVER-8QT	037042			1	1	000		
GEAR-REDUCER	025770-SER		1	2	2	103		
GUARD-SWITCH *150-2*	025496	1	1			103		
GUARD-POWER & DANFOSS SWITCH	035548			1	1	103		
GUIDE A.-DRIP PAN	X28593		1			103		
HARNESS A.-WIRE *150*162*LQSOL	X50224	1		1		103		
HOLDER-DRIP TRAY*150-2-68-756M	035866	2	2	2	2	103		
HOOD A. *150*	X49063	1				103		
HOOD A. *152*	X49065		1			103		
HOOD A. *162*	X35918			1		103		
HOOD A. *168*	X34846				1	103		

+ Available Separately

DESCRIPTION	PART NUMBER	150 QTY.	152 QTY.	162 QTY.	168 QTY.	WARR. CLASS	REMARKS	PARTS UPDATE
INSERT-FRONT PANEL *168*	030773-SS				2	103		
LABEL-CAUTION-GRD-PERM-ENG/SP	032164				1	000		
LABEL-CAUTION GROUND CORD UNIT	032165	1				000		
LABEL-DOOR CAUTION	032749	1			1	000		
LABEL-MIX COOLING ADJ.	020217	1	1	1	1	000		
LABEL-MOVING PARTS WARNING	051433	6	3	3	6	000	REPLACES 024315	
LABEL-STD BY BARREL TEMP ADJ	029092			2	2	000		
LEG-4"-3/8-16 STUD-PLASTIC	024755		4			103		
LEG-4" SS-W/ORING	013458			4		103		
LIGHT-MIX LOW-AMBER ROUND-12V	039707	1	1	2	2	103		
LUBRICANT-TAYLOR 4 OZ.	047518	1	1	1	1	000		
KIT A.-TUNE UP*150-152*	X25802	1	1			000		
CAP-DESIGN-1.010"ID-6 POINT	014218	1	1			000		
O-RING-7/8 OD X .103W	014402	2	2			000		
BEARING-GUIDE	014496	1	1			000		
O-RING-3/4 OD X .103W	015835	1	1			000		
O-RING-2-3/4 OD X .139W	019998	1	1			000		
O-RING-13/16 OD X .139W	021278	1	1			000		
BEARING-FRONT	023262	1	1			000		
TOOL- 0-RING REMOVAL	048260-WHT	1	1			000		
KIT A.-TUNE UP*162-168*	X31167			1	1	000		
BEARING-FRONT	023262			2	2	000		
BEARING-GUIDE	014496			2	2	000		
CAP-DESIGN-1.010"ID-6 POINT	014218			3	3	000		
O-RING-13/16 OD X .139W	021278			2	2	000		
O-RING-2-3/4 OD X .139W	019998			2	2	000		
O-RING-5/16 OD X .070W	016272			2	2	000		
O-RING-7/8 OD X .103W	014402			4	4	000		
SEAL-VALVE	030930			1	1	000		
TOOL- 0-RING REMOVAL	048260-WHT			1	1	000		
MAN-OPER 150/152/162/168	028749-M	1	1	1	1	000		

+ Available Separately

DESCRIPTION	PART NUMBER	150 QTY.	152 QTY.	162 QTY.	168 QTY.	WARR. CLASS	REMARKS	PARTS UPDATE
MOTOR-1/2 HP	059742-	1	1			212	150 & 152 S/N K4126184 REPLACES 024839- 162 & 168 S/N K6030000 & UP REPLACES 024839-	
+CAPACITOR-RUN 35UF/220V	033048	1	1					
+CAPACITOR-START 161-193UF/115V	046568	1	1					
MOTOR-1/2 HP	024839-			2	2	212	150/152 S/N K4126183 162/168 S/N K3020000 & PRIOR	
MOTOR-FAN 17W/60HZ 2900RPM-CCW	027309-	1	1	1	1	103	SHR - 115V USE 062253-12 / 208-230V USE X62253-27 KIT	
MOTOR-FAN 35W-40"LEADS	027817-	1	1			103		
+FAN-4 BLADE 11 " PULL 30DEG CW	028405	1				103		
+FAN-4 BLADE 11 " PUSH 30DEG CW	027818		1			103		
MOTOR-FAN-25W	015184-			2		103		
+FAN-5 BLADE 8" PUSH 37 DEG CCW	047231			2		103		
MOTOR-FAN 50 WATT W/GROUNDWIRE	029770-27				1	103		
+FAN-5 BLADE 12"PUSH 32DEG CCW	047279				1	103		
NUT-STUD *161-162-168*	056802				2	103	S/N K3010000 & UP - USE WITH X56906SER1 DOOR	
NUT-STUD *150-152-162-168*	034829	2	2	2		103	168 S/N K2120000 & PRIOR - USE WITH X38959-SER DOOR	
PAIL-6 QT.	023348	1	1	1	1	000		
PAN-DRIP 11-5/8 LONG	027503	1	1			103		
PAN-DRIP 19-1/2 LONG	035034			1		103		
PAN-DRIP 17-1/4"LONG	027504				1	103		
PANEL A.-FRONT *150-152*	X25036	1	1			103		
PANEL A.-LOWER FRONT *150*	X25518	1				103		
PANEL-BACK BOTTOM *150*	050430	1				103		
PANEL-BACK TOP *150*	050429	1				103		
PANEL-INSERT *150*	025533-SS	1				103		
PANEL-LOWER SIDE *150-168*	030792-SS	2			2	103		
PANEL-UPPER SIDE LEFT *150-68*	030783-SS	1			1	103		
PANEL-UPPER SIDE RIGHT *150-68*	030784-SS	1			1	103		
PANEL-REAR	051556		1			103		

+ Available Separately

+ Available Separately

DESCRIPTION	PART NUMBER	150 QTY.	152 QTY.	162 QTY.	168 QTY.	WARR. CLASS	REMARKS	PARTS UPDATE
PANEL-SIDE *152*LEFT*HP62	051557		1			103		
PANEL-SIDE *152*RIGHT*HP62*	051558		1			103		
PANEL A.-CONTROL LEFT *162*	X37190			1		103		
PANEL A.-CONTROL RIGHT *162*	X37191			1		103		
PANEL A.-FRONT *162-168	X30711			1	1	103		
PANEL-FRONT LEFT *162*	035932-SS			1		103		
PANEL-FRONT RIGHT *162*	035933-SS			1		103		
PANEL-REAR *162AC*	047276-SS			1		103		
PANEL-SIDE-LEFT-162	050213-SS			1		103		
PANEL-SIDE-RIGHT-162	050214-SS			1		103		
PANEL A.-LOWER FRONT *168*	X30747				1	103		
PANEL-BOTTOM BACK *168*	055833				1	103		
PANEL-TOP BACK *168*	030790-SS				1	103		
HARDWARE TO MOUNT PANELS								
BRACKET-PANEL *150-2*162-8* (MALE)	030786	12	6	4	12	103		
FASTENER-DOOR LATCH (FEMALE)	030787	12	6	4	12	000		
FASTENER-DOOR STRIKE (MALE)	030788	12	6	4	12	000		
PLATE-DEC-150-152*MIX LOW	041034-SS	1	1			103		
PLATE-DEC-162-168*	039723-SS			1	1	103		
PLUG-DRIP TRAY HOLE	029595	1		1	1	000		
PULLEY-10J- 1.125PD-5/8BORE	028857	1				103	BEATER MOTOR	
PULLEY-10J-12"PD-5/8BORE	025480	1				103	DIRECT DRIVE	
PULLEY-10J- 1.5PD-5/8BORE	025479		1		2	103	BEATER MOTOR	
PULLEY-10J-4.50PD-5/8BORE	030455		1		2	103	GEAR REDUCER	
PULLEY-AK20X5/8	041162			2		103	BEATER MOTOR	
PULLEY-5.7" PITCH DIA X 5/8	041498			2		103	GEAR REDUCER	
RELAY-3 POLE	012725-	1	1	2	2	103		
RELAY-DPDT-20 A-120V	026581-	1	1	2	2	103		
RELAY-3 POLE-10 AMP.	023845-	1	1	2	2	103	STIR CYCLE	121
SANITIZER KAY-5 125 PACKETS	041082	1	1	1	1	000		
SENSOR A.-MIX LEVEL	X39688	1	1	2	2	103		
SHELL A.-INSULATED *150*	X58792-SER	1						
SHELL A.-INSULATED *152*	X59120-SER		1					

DESCRIPTION	PART NUMBER	150 QTY.	152 QTY.	162 QTY.	168 QTY.	WARR. CLASS	REMARKS	PARTS UPDATE
SHELL A.-INSULATED *162/168*	X50150-SER			1	1	512		
STUD-NOSE CONE-5/16-18X5/16-18	013496	2	2	2	2	103		
SHIELD-SPLASH 11-1/4 X 4-13/16	025063	1	1			103		
SHIELD-SPLASH *162-168*	030789			1	1	103		
SHROUD A.-CONDENSER *150*UPPER	X47506	1				103		
SHROUD A.-CONDENSER *168*AIR	X47370				1	103		
SHROUD-CONDENSER *150*	047511	1				103		
SHROUD-CONDENSER *150*FRT/LEFT	047507	1				103		
SHROUD-CONDENSER *150*FRT/RT	047508	1				103		
SHROUD-CONDENSER *152*	051559		1			103		
SHROUD-CONDENSER	047274			1		103	MAIN	
SHROUD-DANFOSS	027386	1		1	1	103	SHR	
SHROUD-DANFOSS	051542		1			103	SHR	
SHROUD-REAR	030779				1	103		
SKIRT-AIR FLOW *162*HP62	049977			1		103		
SKIRT-AIR FLOW *162/168*	050243				1	103		
SWITCH A.-DRAW *150 SS W/TIMER	X32245-SER	1	1			103		
ACTUATOR-SWITCH	032247	1	1			103		
BRACKET-SWITCH *150*	032246	1	1			103		
E-RING 5/16	016422	1	1			000		
ROD-SWITCH *150-2*	029500	1	1			103		
SPRING-COMP.480X.047X2.00 SS	025452	1	1			103		
SWITCH-PLUNGER-SPDT15A125-250V	032260	2	2			103		
SWITCH A.-DRAW *168*	X32106-SER			2	2	103		
BEARING-SWITCH	029244			2	2	000		
BRACKET-SWITCH *168*	035524			1	1	103		
INSULATOR-SWITCH 1/64 ARMITE	029099			2	2	000		
NUT-PUSH ON-1/2DIA. SHAFT	039735			2	2	000		
SCREW-4-40X1 RH HD STEEL-ZP	028890			2	2	000		
SWITCH-LEVER-SPDT-15A-125-25	027214			2	2	103		
+ARM A.-SWITCH *162-168*	X30736			2	2	103		
+E-RING-1/4 IN-ZD	034962			2	2	000		
+SPRING-COMP.720X.063X2.00	023664			2	2	103		

+ Available Separately

+ Available Separately

DESCRIPTION	PART NUMBER	150 QTY.	152 QTY.	162 QTY.	168 QTY.	WARR. CLASS	REMARKS	PARTS UPDATE
+SWITCH-ACTUATOR	035609			2	2	103		
SWITCH-PRESSURE 440 PSI-SOLDER	048230	1	1	2		103		
SWITCH-PRESSURE 405 PSI-SOLDER	052663				2	103	K0020000/UP (REPLACES 048230)	151
SWITCH-PUSHBUTTON-SPST	016530	1	1	2	2	103		
SWITCH-TOGGLE-DPDT*ON-OFF-ON	014464	1	1	2	2	103		
SWITCH-TOGGLE-3PDT	017184	1	1	1	1	103	MIX CAN COOLING	
TEE-ACCESS 1/4	026686	1				103	SHR	
TIMER A.-CYCLE-14 MIN	X31959-	1	1	1	1	103		
TIMER-DELAY ON MAKE-30-1000S	031958-	1	1	1	1	103		
TIMER-DELAY ON MAKE 2 SEC.	030667-	1	1	1	1	103		
TIMER-CYCLE-5 SEC ON/120 SEC OFF	037188-	1	1	2	2	103	STIR CYCLE	121
TRANS.-CONT.-ANTICIPATOR 10 VA	010246-	1	1	1	1	103		
TRAY-DRIP 10-7/8 X 4-7/16	025062	1	1			103		
TRAY-DRIP-16-7/8L X 4-3/8	030565			1	1	103		
TRIM-MIDDLE BACK PANEL *150*	025537	1				103		
TRIM-SIDE & FRONT *150*	025528	1				103		
TRIM-TOP BACK PANEL *150*	025536	1				103		
TRIM-FRONT-SS	025862-SS		1			103		
TRIM-TOP BACK *152*	025866		1			103		
TRIM-FRONT-SS	050212-SS			1		103		
TRIM-PANEL REAR *162*	035923			1		103		
TRIM-MIDDLE BACK PANEL *168	030795				1	103		
TRIM-PANEL TOP BACK *168*	030775				1	103		
TRIM-SIDE & FRONT *168*	030774				1	103		
TUBE-FEED-150-DANFOSS-.166HOLE	035819	1	1			103		
TUBE-FEED-SS-TM-TWIN	030797			2	2	103		
VALVE-ACCESS 1/4FL X 3/8SDR-90	044455	1	1	1		103		
VALVE-ACCESS-1/4 MFLX1/4 S-90	047016	2	2	3	1	103		
VALVE-ACCESS-1/4FL X 3/8SDR-90	046903			1		103		
VALVE-ACCESS 1/4FL X 1/4S	044404			1	1	103		
VALVE-ACCESS-1/4MFL X 3/8ODSDR	053565				4			
VALVE-EPR 1/4S	022665	1	1	1	1	103	SHR	

DESCRIPTION	PART NUMBER	150 QTY.	152 QTY.	162 QTY.	168 QTY.	WARR. CLASS	REMARKS	PARTS UPDATE
VALVE-EXP-AUTO-1/4S X1/4 FPT	046365	1	1	2	2	103	REPLACES 047232, J508 & UP	
+BOOT-VALVE-EXPANSION	050900	1	1	2	2	000	REPLACES 027137, J508 & UP	
VALVE-SOLENOID 7/64ORF X 1/4S	043449-	1	1	2	2	103		
50 HZ UNITS								
BLOCK-TERMINAL-7 POLE GREEN	024156	1	1	1	3	103		
COMPRESSOR AKA9462ZXC-AK172JT	049302-40	1	1	2	2	512	230-50-1	
+CAPACITOR-RUN- 15UF/370V	027087	1	1	2	2	103	230-50-1	
+CAPACITOR-START- 72-88UF/330V	039567	1	1	2	2	103	230-50-1	
+RELAY-START-COMPRESSOR	041064	1	1	2	2	103	230-50-1	
DIAGRAM-WIRING *150/152*	050416-40	1	1			000		
DIAGRAM-WIRING	050205-40S			1	1	000		
DIAGRAM-WIRING	050205-40			1	1	000	DUAL POWER	
MOTOR-FAN 23.2W 50HZ	027817-34	1	1			103		
+FAN-4 BLADE 11 " PULL 30DEG	028405	1	1			103		
MOTOR-FAN 100W 220-240V 50HZ	047178-34				1	103		
+FAN-5 BLADE 12"PUSH 32DEG CCW	047279				1	103		
DVD-OPS TRAIN VIDEO*TAYLORMATE	037665-DVD	1	1	1	1	000		
SELF SERVE UNITS								
KIT A.-HOPPER LOCK-162	X63896			1	1	103		
BAR-HOPPER LOCK *162*	063757			1	1	103		
LOCK-ADJ SHACKLE PADLOCK TYPE	038745			1	1	103		
NUTSERT-10-32/.020-.130 GRIP	047597			4	4	000		
RETAINER-BAR-LOCK-HOPPER	057850			1	1	000		
RETAINER-BAR-LOCK-HOPPER-ADJ	057853			1	1	000		
SCREW-10-32X1-1/2 SLTD TRUSS	033934			4	4	000		
STANDOFF-3/8"L X 1/2"D SS	057849			4	4	000		
DECAL-MAG-FLAVOR PADS	044022			1	1	000		
DECAL-MAG-SLF SRV-TM-TWIN	044021			1	1	000		
GUARD-POWER SWITCH	034830			1	1	103		
GUARD-POWER & DANFOSS SWITCHES	035548			1	1	103		
PCB A.-MIX LOW CHIME	X41243SER1			1	1	103	115 & 230V APPLICATIONS	

+ Available Separately

Models 150/152
050416-12

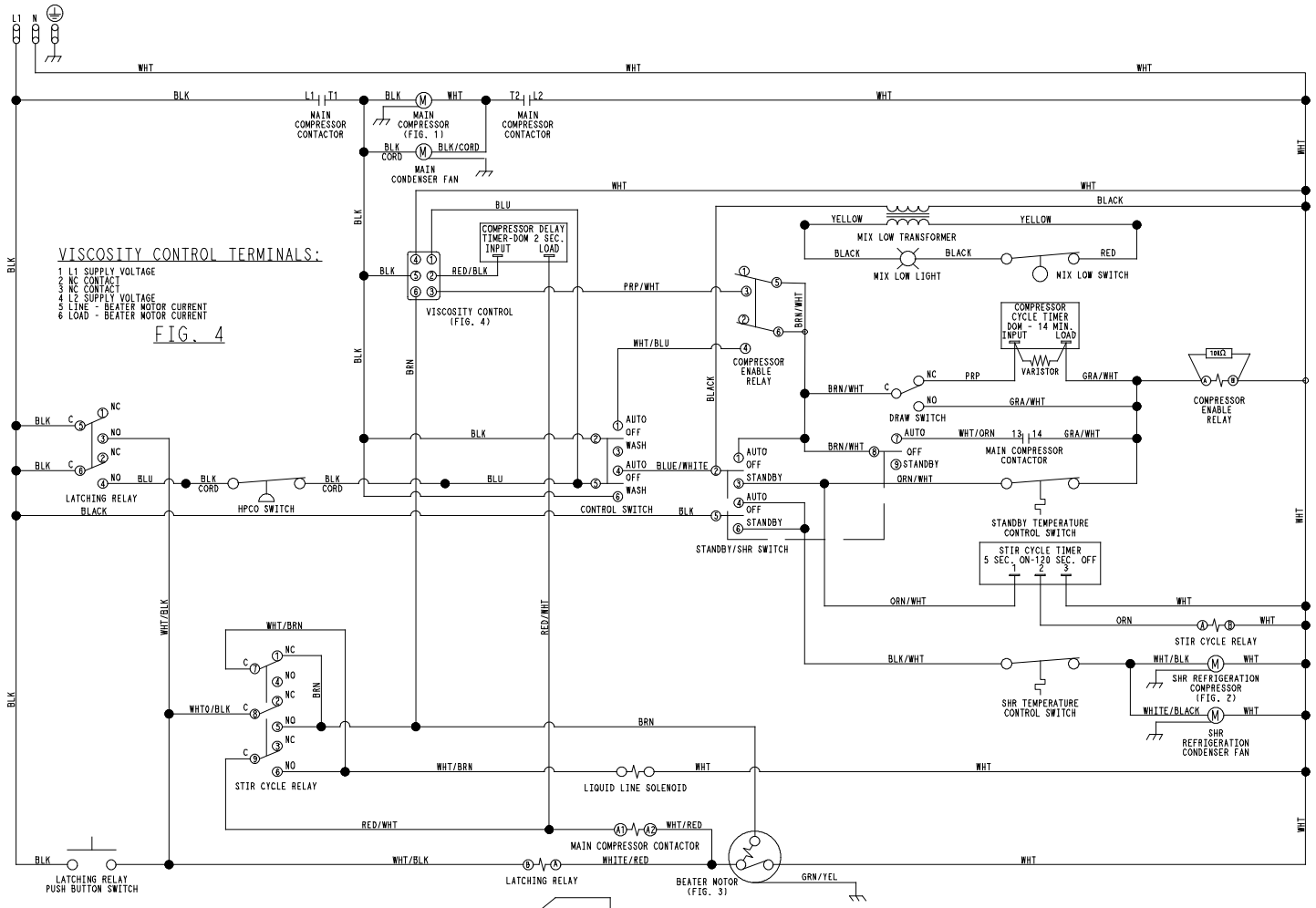

NOTES:

1) FOR "CCW" ROTATION OF LEESON BEATER MOTOR FOR MODEL #152 CONNECT INTERNAL T8 TO TERMINAL 2 AND INTERNAL T5 TO TERMINAL 4.
FOR "CW" ROTATION OF LEESON BEATER MOTOR FOR MODEL #150 CONNECT INTERNAL T5 TO TERMINAL 2 AND INTERNAL T8 TO TERMINAL 4.

2) FOR "CCW" ROTATION OF A.O. SMITH BEATER MOTOR FOR MODEL #152 CONNECT INTERNAL RED TO TERMINAL 4 AND INTERNAL BLACK TO TERMINAL 2.
FOR "CW" ROTATION OF A.O. SMITH BEATER MOTOR FOR MODEL #150 CONNECT INTERNAL BLACK TO TERMINAL 4 AND INTERNAL RED TO TERMINAL 2.

3) FOR "CCW" ROTATION OF GE/RBC BEATER MOTOR FOR MODEL #152 CONNECT INTERNAL BLUE TO TERMINAL 5 AND INTERNAL YELLOW TO TERMINAL 2.
FOR "CW" ROTATION OF GE/RBC BEATER MOTOR FOR MODEL #150 CONNECT INTERNAL YELLOW TO TERMINAL 5 AND INTERNAL BLUE TO TERMINAL 2.

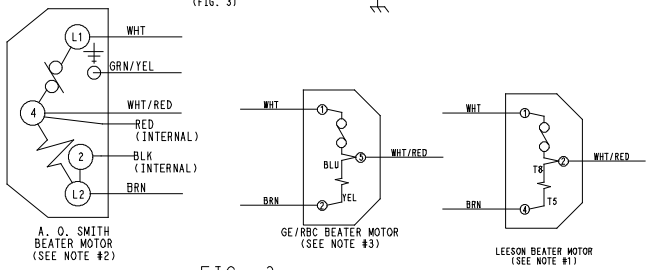

FIG. 3

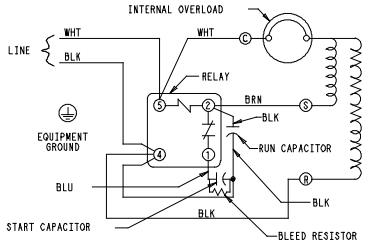

FIG. 1
TECUMSEH COMPRESSOR WIRING

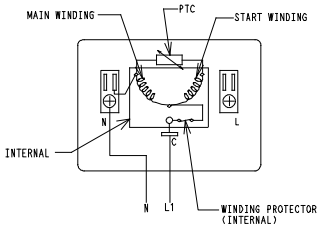

FIG. 2
SHR COMPRESSOR WIRING
(MODEL TL2A <OR> TL2.5F W/LST)

Models 150/152
050416-27

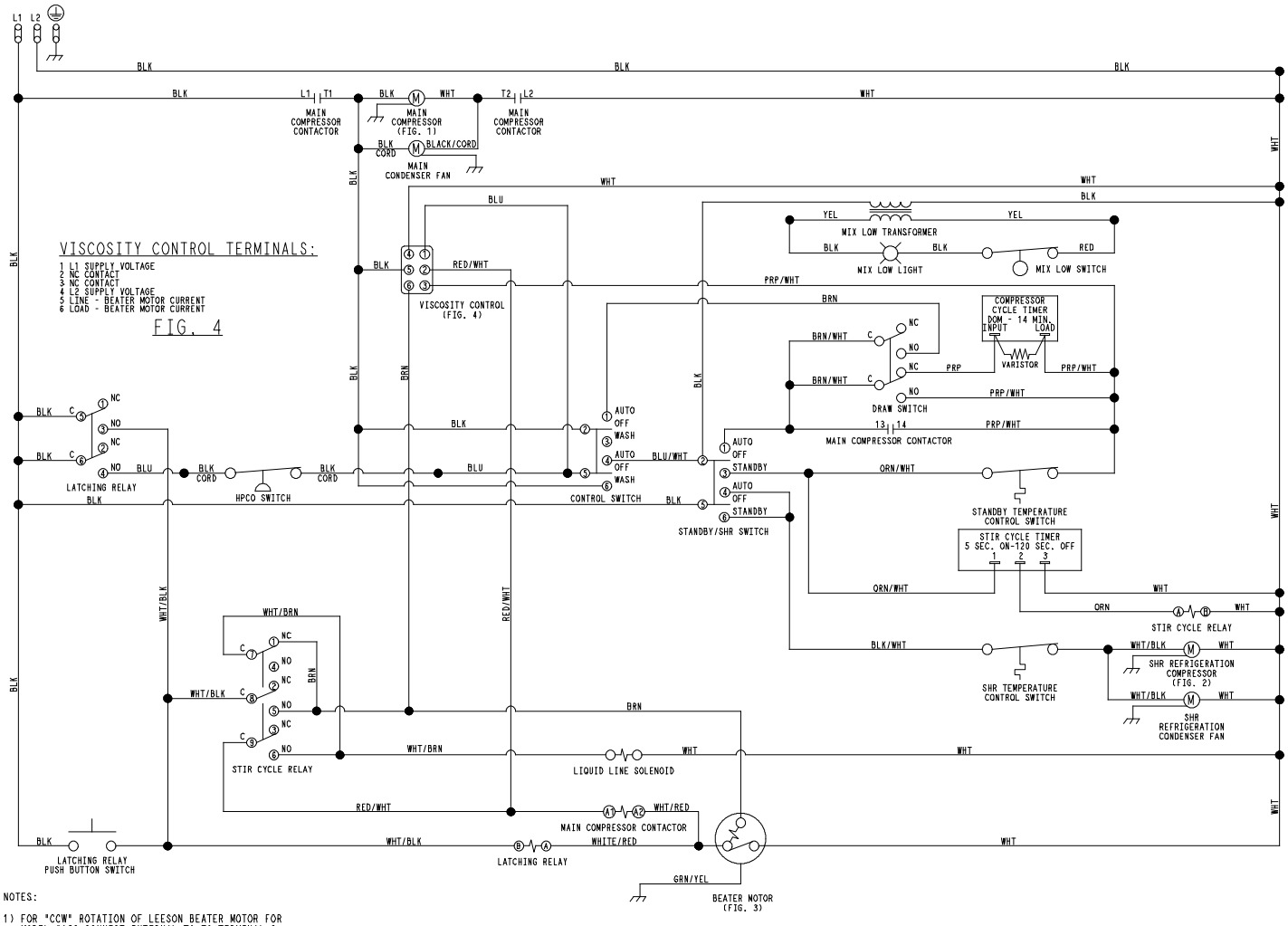

NOTES:

1) FOR "CCW" ROTATION OF LEESON BEATER MOTOR FOR MODEL #152 CONNECT INTERNAL T8 TO TERMINAL 2 AND INTERNAL T5 TO TERMINAL 4.
FOR "CW" ROTATION OF LEESON BEATER MOTOR FOR MODEL #150 CONNECT INTERNAL T5 TO TERMINAL 2 AND INTERNAL T8 TO TERMINAL 4.

2) FOR "CCW" ROTATION OF A.O. SMITH BEATER MOTOR FOR MODEL #152 CONNECT INTERNAL RED TO TERMINAL 4 AND INTERNAL BLACK TO TERMINAL 2.
FOR "CW" ROTATION OF A.O. SMITH BEATER MOTOR FOR MODEL #150 CONNECT INTERNAL BLACK TO TERMINAL 4 AND INTERNAL RED TO TERMINAL 2.

3) FOR "CCW" ROTATION OF GE/RBC BEATER MOTOR FOR MODEL #152 CONNECT INTERNAL BLUE TO TERMINAL 5 AND INTERNAL YELLOW TO TERMINAL 2.
FOR "CW" ROTATION OF GE/RBC BEATER MOTOR FOR MODEL #150 CONNECT INTERNAL YELLOW TO TERMINAL 5 AND INTERNAL BLUE TO TERMINAL 2.

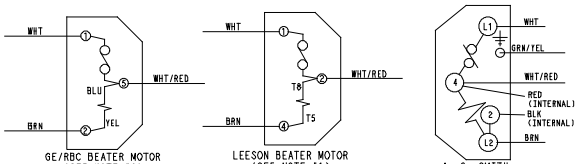

FIG. 3

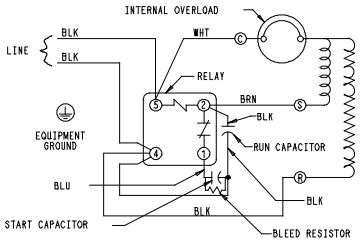

FIG. 1
TECUMSEH COMPRESSOR WIRING

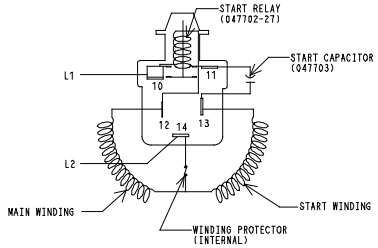

FIG. 2
SHR COMPRESSOR WIRING
(MODEL TL3G W/HST)

Models 150/152
050416-40

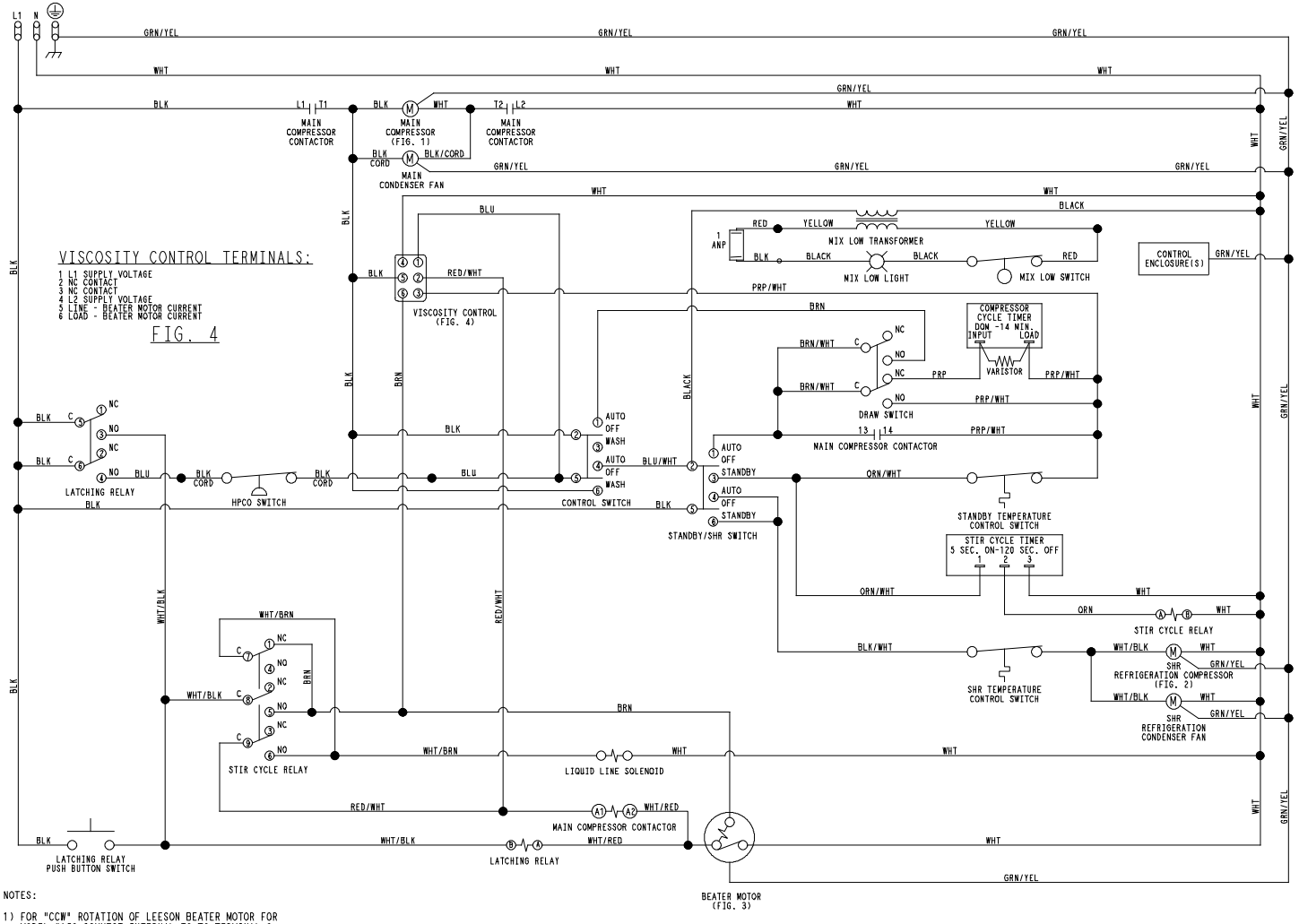

NOTES:

1) FOR "CCW" ROTATION OF LEESON BEATER MOTOR FOR MODEL #152 CONNECT INTERNAL T8 TO TERMINAL 2 AND INTERNAL T5 TO TERMINAL 4.
FOR "CW" ROTATION OF LEESON BEATER MOTOR FOR MODEL #150 CONNECT INTERNAL T5 TO TERMINAL 2 AND INTERNAL T8 TO TERMINAL 4.

2) FOR "CCW" ROTATION OF GE/RBC BEATER MOTOR FOR MODEL #152 CONNECT INTERNAL BLUE TO TERMINAL 5 AND INTERNAL YELLOW TO TERMINAL 2.
FOR "CW" ROTATION OF GE/RBC BEATER MOTOR FOR MODEL #150 CONNECT INTERNAL YELLOW TO TERMINAL 5 AND INTERNAL BLUE TO TERMINAL 2.

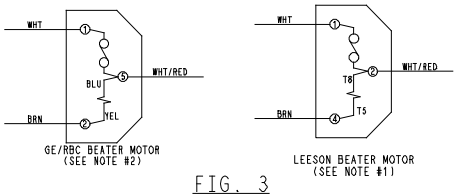

FIG. 3

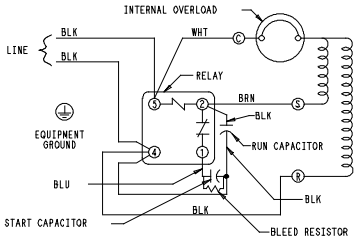

FIG. 1
TECUMSEH COMPRESSOR WIRING

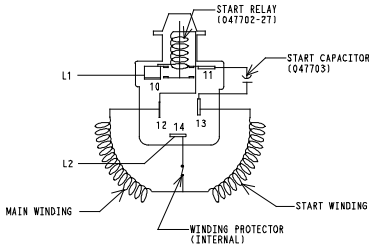

FIG. 2
SHR COMPRESSOR WIRING
(MODEL TL36 W/HST)

FIG. 1

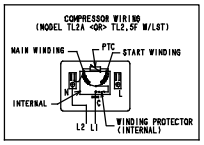

NOTES:

1. ONE (1) FAN ONLY ON MODEL 168. RUN CAPACITOR APPLIES TO MODEL 168 ONLY.

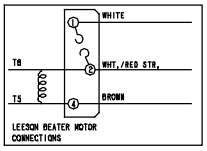

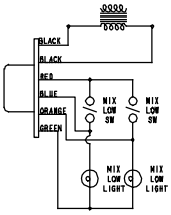

DETAIL "A"
MODELS W/"CHIME"
OPTION

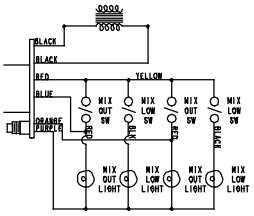

MIX LOW AND MIX OUT LIGHT OPTION
W/AUDIBLE MIX OUT ALARM AND PUSH
BUTTON SILENCE

VISCOSITY CONTROL

1. L1
2. N.C. CONTACT
3. N.C. CONTACT
4. L2
5. LINE
6. LOAD

Models 162/168
050205-12

NOTES:

1. ONE (1) FAN ONLY ON MODEL 168, RUN CAPACITOR APPLIES TO MODEL 168 ONLY.

FIG. 1

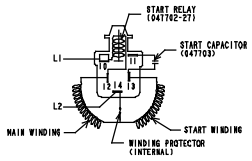

COMPRESSOR WIRING (MODEL TL36 W/HST)

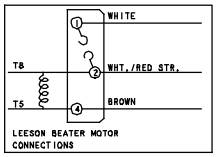

LEESON BEATER MOTOR CONNECTIONS

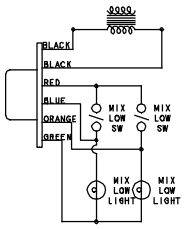

DETAIL "A" MODELS W/"CHIME" OPTION

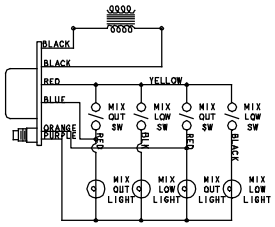

MIX LOW AND MIX OUT LIGHT OPTION W/AUDIBLE MIX OUT ALARM AND PUSH BUTTON SILENCE

VISCOSITY CONTROL

1. L1
2. N.C. CONTACT
3. N.C. CONTACT
4. L2
5. LINE
6. LOAD

POWER INPUT L1 L2 EQUIPMENT GROUND (REF LEFT CONTROL BOX)

Models 162/168
050205-27

NOTES:
1. ONE (1) FAN ONLY ON MODEL 168. RUN CAPACITOR APPLIES TO MODEL 168 ONLY.

FIG. 1

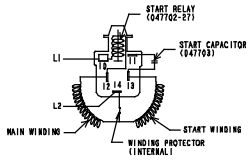

COMPRESSOR WIRING (MODEL TL3G W/HST)

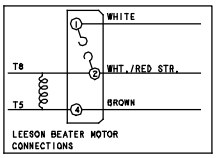

LEESON BEATER MOTOR CONNECTIONS

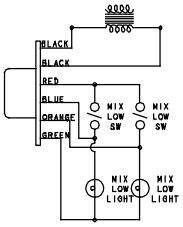

DETAIL "A" MODELS W/"CHIME" OPTION

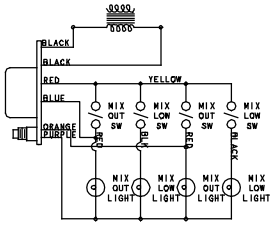

MIX LOW AND MIX OUT LIGHT OPTION W/AUDIBLE MIX OUT ALARM AND PUSH BUTTON SILENCE

VISCOSITY CONTROL

1. L1
2. N.C. CONTACT
3. N.C. CONTACT
4. L2
5. LINE
6. LOAD

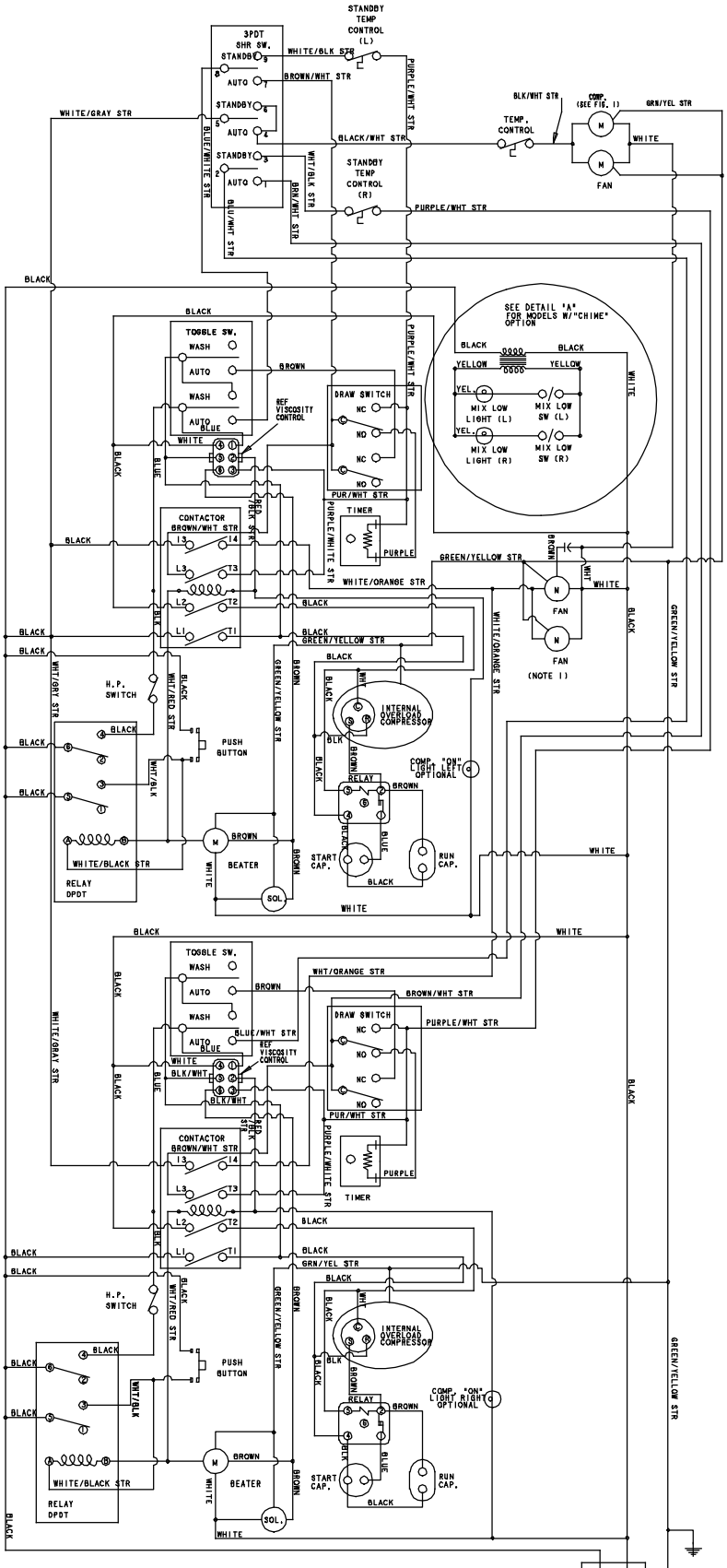

Models 162/168
050205-40S