OPERATOR'S
MANUAL

Model C723
Soft Serve Freezer

Original Operating Instructions

069127-M

3/18/11 (Original Publication)
(Updated 11/21/13)

Complete this page for quick reference when service is required:

Taylor Distributor:_____

Address:_____

Phone:_____

Service:_____

Parts:_____

Date of Installation:_____

Information found on the data label:

Model Number:_____

Serial Number:_____

Electrical Specs: Voltage_____Cycle_____

Phase_____

Maximum Fuse Size:_____A

Minimum Wire Ampacity:_____A

© 2011 Carrier Commercial Refrigeration, Inc.
069127-M
Any unauthorized reproduction, disclosure, or distribution of copies by any person of any portion of this work may be a violation of Copyright Law of the United States of America and other countries, could result in the awarding of Statutory Damages of up to $250,000 (17 USC 504) for infringement, and may result in further civil and criminal penalties. All rights reserved.

Taylor Company
a division of Carrier Commercial Refrigeration, Inc.
750 N. Blackhawk Blvd.
Rockton, IL 61072

Table of Contents

Section 1 To the Installer 1

Installer Safety 1
Site Preparation 1
Air Cooled Units 1
Water Connections (Water Cooled Units Only) 2
Electrical Connections 2
Beater Rotation 3
Optional Carts 3
Refrigerant 3

Section 2 To the Operator 4

Section 3 Safety 5

Section 4 Operator Parts Identification 8

Model C723 8
Model C723 - Factory Equipped With Agitator 10
Model C723 - Door and Beater Assembly 12
Optional Carts 13
Accessories 14
Brushes 15

Section 5 Important: To the Operator 16

Symbol Definitions 17
Operating Screen Descriptions 20
Manager's Menu 21

Section 6 Operating Procedures 27

Assembly 27
Sanitizing 32
Priming 34
Manual Brush Cleaning 34
Draining Product From The Freezing Cylinder 34
Rinsing 35

Hopper Cleaning 35
Disassembly 36
Brush Cleaning 36

Section 7 Important: Operator Checklist 37

During Cleaning and Sanitizing 37
Troubleshooting Bacterial Count 37
Regular Maintenance Checks 37
Winter Storage 38

Section 8 Troubleshooting Guide 39

Section 9 Parts Replacement Schedule 42

Section 10 Limited Warranty on Equipment 43

Section 11 Limited Warranty on Parts 45

Section 12 Parts List 48

Wiring Diagrams 61

Note: Continuing research results in steady improvements; therefore, information in this manual is subject to change without notice.

Note: Only instructions originating from the factory or its authorized translation representative(s) are considered to be the original set of instructions.

© 2011 Carrier Commercial Refrigeration, Inc. (Original Publication)
Updated November, 2013
069127-M
Any unauthorized reproduction, disclosure, or distribution of copies by any person of any portion of this work may be a violation of Copyright Law of the United States of America and other countries, could result in the awarding of Statutory Damages of up to $250,000 (17 USC 504) for infringement, and may result in further civil and criminal penalties.
All rights reserved.

Taylor Company
a division of Carrier Commercial Refrigeration, Inc.
750 N. Blackhawk Blvd.
Rockton, IL 61072

Section 1 To the Installer

The following information has been included in the manual as safety and regulatory guidelines. For complete installation instructions, please see the Installation Checklist.

Installer Safety

In all areas of the world, equipment should be installed in accordance with existing local codes. Please contact your local authorities if you have any questions.

Care should be taken to ensure that all basic safety practices are followed during the installation and servicing activities related to the installation and service of Taylor equipment.

- Only authorized Taylor service personnel should perform installation and repairs on the equipment.
- Authorized service personnel should consult OSHA Standard 29CFRI910.147 or the applicable code of the local area for the industry standards on lockout/tagout procedures before beginning any installation or repairs.
- Authorized service personnel must ensure that the proper PPE is available and worn when required during installation and service.
- Authorized service personnel must remove all metal jewelry, rings, and watches before working on electrical equipment.

The main power supply(s) to the freezer must be disconnected prior to performing any repairs. Failure to follow this instruction may result in personal injury or death from electrical shock or hazardous moving parts as well as poor performance or damage to the equipment.

Note: All repairs must be performed by an authorized Taylor Service Technician.

This unit has many sharp edges that can cause severe injuries.

Site Preparation

Review the area where the unit will be installed before uncrating the unit. Make sure all possible hazards to the user or equipment have been addressed.

Air Cooled Units

The Model C723 air cooled unit requires a minimum of 6” (152 mm) on the left and right sides and 0” on the back. The Model C723 unit equipped with top air discharge requires 6” (152 mm) on the left side, 0” on the right side, and 0” on the back.

This will allow for adequate air flow across the condenser. Failure to allow adequate clearance can reduce the refrigeration capacity of the freezer and possibly cause permanent damage to the compressor.

For Indoor Use Only: This unit is designed to operate indoors, under normal ambient temperatures of 70°-75°F (21°-24°C). The freezer has successfully performed in high ambient temperatures of 104°(40°C) at reduced capacities.

This unit must **NOT** be installed in an area where a water jet or hose can be used. **NEVER** use a water jet or hose to rinse or clean the unit. Failure to follow this instruction may result in electrocution.

This unit must be installed on a level surface to avoid the hazard of tipping. Extreme care should be taken in moving this equipment for any reason. Two or more people are required to safely move this unit. Failure to comply may result in personal injury or equipment damage.

Uncrate the unit and inspect it for damage. Report any damage to your Taylor Distributor.

This piece of equipment is made in the USA and has USA sizes of hardware. All metric conversions are approximate and vary in size.

Water Connections

(Water Cooled Units Only)

An adequate cold water supply must be provided with a hand shut-off valve. On the back, right side of the unit, two 3/8” I.P.S. water connections for inlet and outlet are provided for easy hook-up. 1/2” inside diameter water lines should be connected to the machine. (Flexible lines are recommended, if local codes permit.) Depending on local water conditions, it may be advisable to install a water strainer to prevent foreign substances from clogging the automatic water valve. There will be only one water “in” and one water “out” connection. DO NOT install a hand shut-off valve on the water “out” line! Water should always flow in this order: first, through the automatic water valve; second, through the condenser; and third, through the outlet fitting to an **open trap drain.**

A back flow prevention device is required on the incoming water connection side. Please refer to the applicable National, State, and local codes for determining the proper configuration.

Electrical Connections

In the United States, this equipment is intended to be installed in accordance with the National Electrical Code (NEC), ANSI/NFPA 70-1987. The purpose of the NEC code is the practical safeguarding of persons and property from hazards arising from the use of electricity. This code contains provisions considered necessary for safety. In all other areas of the world, equipment should be installed in accordance with the existing local codes. Please contact your local authorities.

FOLLOW YOUR LOCAL ELECTRICAL CODES!

Each unit requires one power supply for each data label on the unit. Check the data label(s) on the freezer for branch circuit overcurrent protection or fuse, circuit ampacity, and other electrical specifications. Refer to the wiring diagram provided inside of the electrical box for proper power connections.

CAUTION: THIS EQUIPMENT MUST BE PROPERLY GROUNDED! FAILURE TO DO SO CAN RESULT IN SEVERE PERSONAL INJURY FROM ELECTRICAL SHOCK!

This unit is provided with an equipotential grounding lug that is to be properly attached to the rear of the frame by the authorized installer. The installation location is marked by the equipotential bonding symbol (5021 of IEC 60417-1) on both the removable panel and the equipment's frame.

- Appliances that are permanently connected to fixed wiring and for which leakage currents may exceed 10 mA, particularly when disconnected or not used for long periods, or during initial installation, shall have protective devices such as a GFI, to protect against the leakage of current, installed by the authorized personnel to the local codes.
- Stationary appliances which are not equipped with a power cord and a plug or another device to disconnect the appliance from the power source must have an all-pole disconnecting device with a contact gap of at least 3 mm installed in the external installation.
- Supply cords used with this unit shall be oil-resistant, sheathed flexible cable not lighter than ordinary polychloroprene or other equivalent synthetic elastomer-sheathed cord (Code designation 60245 IEC 57) installed with the proper cord anchorage to relieve conductors from strain, including twisting, at the terminals and protect the insulation of the conductors from abrasion.

  If the supply cord is damaged, it must be replaced by the manufacturer, its service agent, or similarly qualified person, in order to avoid a hazard.

130225

Beater Rotation

Beater rotation must be clockwise as viewed looking into the freezing cylinder.

Note: The following procedures should be performed by a trained service technician.

To correct the rotation on a three-phase unit, interchange any two incoming power supply lines at freezer main terminal block only.

To correct rotation on a single-phase unit, change the leads inside the beater motor. (Follow the diagram printed on the motor.)

Electrical connections are made directly to the terminal block provided in the splice box.

Optional Carts

There are two optional carts available.

1. **C20600-AFB: ADA compliant height cart, not equipped with a door.**

2. **C20600-000: Standard height cart with reversible front door panel and rear panel. Note:** If the door is required on the rear of the cart instead of the front, the front door panel and the rear panel can be reversed. To reverse these panels, remove the five screws on each panel. Reverse and reinstall the panels, making sure **all** screws are reinstalled.

IMPORTANT! For safety purposes, the freezer must be bolted to the cart using all 4 bolts. Failure to comply could result in personnel injury and equipment damage.

Refrigerant

In consideration of our environment, Taylor uses only earth friendly HFC refrigerants. The HFC refrigerant used in this unit is R404A. This refrigerant is generally considered non-toxic and non-flammable, with an Ozone Depleting Potential (ODP) of zero (0).

However, any gas under pressure is potentially hazardous and must be handled with caution. NEVER fill any refrigerant cylinder completely with liquid. Filling the cylinder to approximately 80% will allow for normal expansion.

Use only R404A refrigerant that conforms to the AHRI standard 700 specification. The use of any other refrigerant may expose users and operators to unexpected safety hazards.

Refrigerant liquid sprayed onto the skin may cause serious damage to tissue. Keep eyes and skin protected. If refrigerant burns should occur, flush immediately with cold water. If burns are severe, apply ice packs and contact a physician immediately.

Taylor reminds technicians to be cautious of government laws regarding refrigerant recovery, recycling, and reclaiming systems. If you have any questions regarding these laws, please contact the factory Service Department.

WARNING: R404A refrigerant used in conjunction with polyolester oils is extremely moisture absorbent. When opening a refrigeration system, the maximum time the system is open must not exceed 15 minutes. Cap all open tubing to prevent humid air or water from being absorbed by the oil.

Section 2 To the Operator

Your freezer has been carefully engineered and manufactured to give you dependable operation.

This unit, when properly operated and cared for, will produce a consistent quality product. Like all mechanical products, it will require cleaning and maintenance. A minimum amount of care and attention is necessary if the operating procedures outlined in this manual are followed closely.

This Operator's Manual should be read before operating or performing any maintenance on your equipment.

Your Taylor freezer will NOT eventually compensate for and correct any errors during the set-up or filling operations. Thus, the initial assembly and priming procedures are of extreme importance. It is strongly recommended that personnel responsible for the equipment's operation, both assembly and disassembly, go through these procedures together in order to be properly trained and to make sure that no confusion exists.

In the event you should require technical assistance, please contact your local authorized Taylor Distributor.

Your Taylor warranty is valid only if the parts are authorized Taylor parts, purchased from the local authorized Taylor Distributor, and only if all required service work is provided by an authorized Taylor service technician. Taylor reserves the right to deny warranty claims on units or parts if non-Taylor approved parts or incorrect refrigerant were installed in the unit, system modifications were performed beyond factory recommendations, or it is determined that the failure was caused by abuse, misuse, neglect, or failure to follow all operating instructions. For full details of your Taylor Warranty, please see the Limited Warranty section in this manual.

Note: Constant research results in steady improvements; therefore, information in this manual is subject to change without notice.

If the crossed out wheeled bin symbol is affixed to this product, it signifies that this product is compliant with the EU Directive as well as other similar legislation in effect after August 13, 2005. Therefore, it must be collected separately after its use is completed, and cannot be disposed as unsorted municipal waste. The user is responsible for returning the product to the appropriate collection facility, as specified by the local code.

For additional information regarding applicable local laws, please contact the municipal facility and/or local distributor.

Compressor Warranty Disclaimer

The refrigeration compressor(s) on this unit are warranted for the term stated in the Limited Warranty section in this manual. However, due to the Montreal Protocol and the U.S. Clean Air Act Amendments of 1990, many new refrigerants are being tested and developed, thus seeking their way into the service industry. Some of these new refrigerants are being advertised as drop-in replacements for numerous applications. It should be noted that in the event of ordinary service to this unit's refrigeration system, **only the refrigerant specified on the affixed data label should be used**. The unauthorized use of alternate refrigerants will void your Taylor compressor warranty. It is the unit owner's responsibility to make this fact known to any technician he employs.

It should also be noted that Taylor does not warrant the refrigerant used in its equipment. For example, if the refrigerant is lost during the course of ordinary service to this machine, Taylor has no obligation to either supply or provide its replacement either at billable or unbillable terms. Taylor does have the obligation to recommend a suitable replacement if the original refrigerant is banned, obsoleted, or no longer available during the five year warranty of the compressor.

Taylor will continue to monitor the industry and test new alternates as they are being developed. Should a new alternate prove, through our testing, that it would be accepted as a drop-in replacement, then the above disclaimer would become null and void. To find out the current status of an alternate refrigerant as it relates to your compressor warranty, call the local Taylor Distributor or the Taylor Factory. Be prepared to provide the Model/Serial Number of the unit in question.

131121

Section 3 Safety

We, at Taylor Company, are concerned about the safety of the operator when he or she comes in contact with the freezer and its parts. Taylor has gone to extreme efforts to design and manufacture built-in safety features to protect both you and the service technician. As an example, warning labels have been attached to the freezer to further point out safety precautions to the operator.

IMPORTANT - Failure to adhere to the following safety precautions may result in severe personal injury or death. Failure to comply with these warnings may damage the machine and its components. Component damage will result in part replacement expense and service repair expense.

DO NOT operate the freezer without reading this Operator Manual. Failure to follow this instruction may result in equipment damage, poor freezer performance, health hazards, or personal injury.

This appliance is to be used only by trained personnel. It is not intended for use by children or people with reduced physical, sensory, or mental capabilities, or lack of experience and knowledge, unless given supervision or instruction concerning the use of the appliance by a person responsible for their safety.

This unit is provided with an equipotential grounding lug that is to be properly attached to the rear of the frame by the authorized installer. The installation location is marked by the equipotential bonding symbol (5021 of IEC 60417-1) on both the removable panel and the equipment's frame.

DO NOT use a water jet to clean or rinse the freezer. Failure to follow these instructions may result in serious electrical shock.

- All repairs must be performed by an authorized Taylor service technician.
- The main power supplies to the machine must be disconnected prior to performing any repairs.
- **DO NOT** operate the freezer unless it is properly grounded.
- **DO NOT** operate the freezer with larger fuses than specified on the freezer data label.
- Appliances that are permanently connected to fixed wiring and for which leakage currents may exceed 10 mA, particularly when disconnected or not used for long periods, or during initial installation, shall have protective devices such as a GFI, to protect against the leakage of current, installed by the authorized personnel to the local codes.
- Stationary appliances which are not equipped with a power cord and a plug or another device to disconnect the appliance from the power source must have an all-pole disconnecting device with a contact gap of at least 3 mm installed in the external installation.
- Supply cords used with this unit shall be oil-resistant, sheathed flexible cable not lighter than ordinary polychloroprene or other equivalent synthetic elastomer-sheathed cord (Code designation 60245 IEC 57) installed with the proper cord anchorage to relieve conductors from strain, including twisting, at the terminals and protect the insulation of the conductors from abrasion.

  If the supply cord is damaged, it must be replaced by the manufacturer, its service agent, or similarly qualified person, in order to avoid a hazard.

Failure to follow these instructions may result in electrocution. Contact your local authorized Taylor Distributor for service.

- **DO NOT** allow untrained personnel to operate this machine.
- **DO NOT** operate the freezer unless all service panels and access doors are restrained with screws.
- **DO NOT** remove any internal operating parts (examples: freezer door, beater, scraper blades, etc.) unless all control switches are in the OFF position.

Failure to follow these instructions may result in severe personal injury to fingers or hands from hazardous moving parts.

This unit has many sharp edges that can cause severe injuries.

- **DO NOT** put objects or fingers in the door spout. This may contaminate the product and cause severe personal injury from blade contact.
- **USE EXTREME CAUTION** when removing the beater asssembly. The scraper blades are very sharp.
- **CAUTION-SHARP EDGES:** Two people are required to handle the cup/cone dispenser. Protective gloves must be worn and the mounting holes must NOT be used to lift or hold the dispenser. Failure to follow this instruction can result in personal injury to fingers or equipment damage.

Access to the service area of the unit is restricted to persons having knowledge and practical experience with the appliance, in particular as far as safety and hygiene are concerned.

This machine must be placed on a level surface. Extreme care should be taken in moving it for any reason. Two or more persons are required to safely move this machine. Failure to comply may result in personal injury or equipment damage.

Cleaning and sanitizing schedules are governed by your state or local regulatory agencies and must be followed accordingly. Please refer to the cleaning section of this manual for the proper procedure to clean this unit.

DO NOT obstruct air intake and discharge openings:

The Model C723 air cooled unit requires a minimum of 6” (152 mm) on the left and right sides and 0” on the back. The Model C723 unit equipped with top air discharge requires 6” (152 mm) on the left side, 0” on the right side, and 0” on the back.

This will allow for adequate air flow across the condenser. Failure to allow adequate clearance can reduce the refrigeration capacity of the freezer and possibly cause permanent damage to the compressor.

For Indoor Use Only: This unit is designed to operate indoors, under normal ambient temperatures of 70° - 75°F (21° - 24°C). The freezer has successfully performed in high ambient temperatures of 104°(40°C) at reduced capacities.

DO NOT run the machine without product. Failure to follow this instruction can result in damage to the machine.

NOISE LEVEL: Airborne noise emission does not exceed 78 dB(A) when measured at a distance of 1.0 meter from the surface of the machine and at a height of 1.6 meters from the floor.

Notes:

Section 4 Operator Parts Identification

Model C723

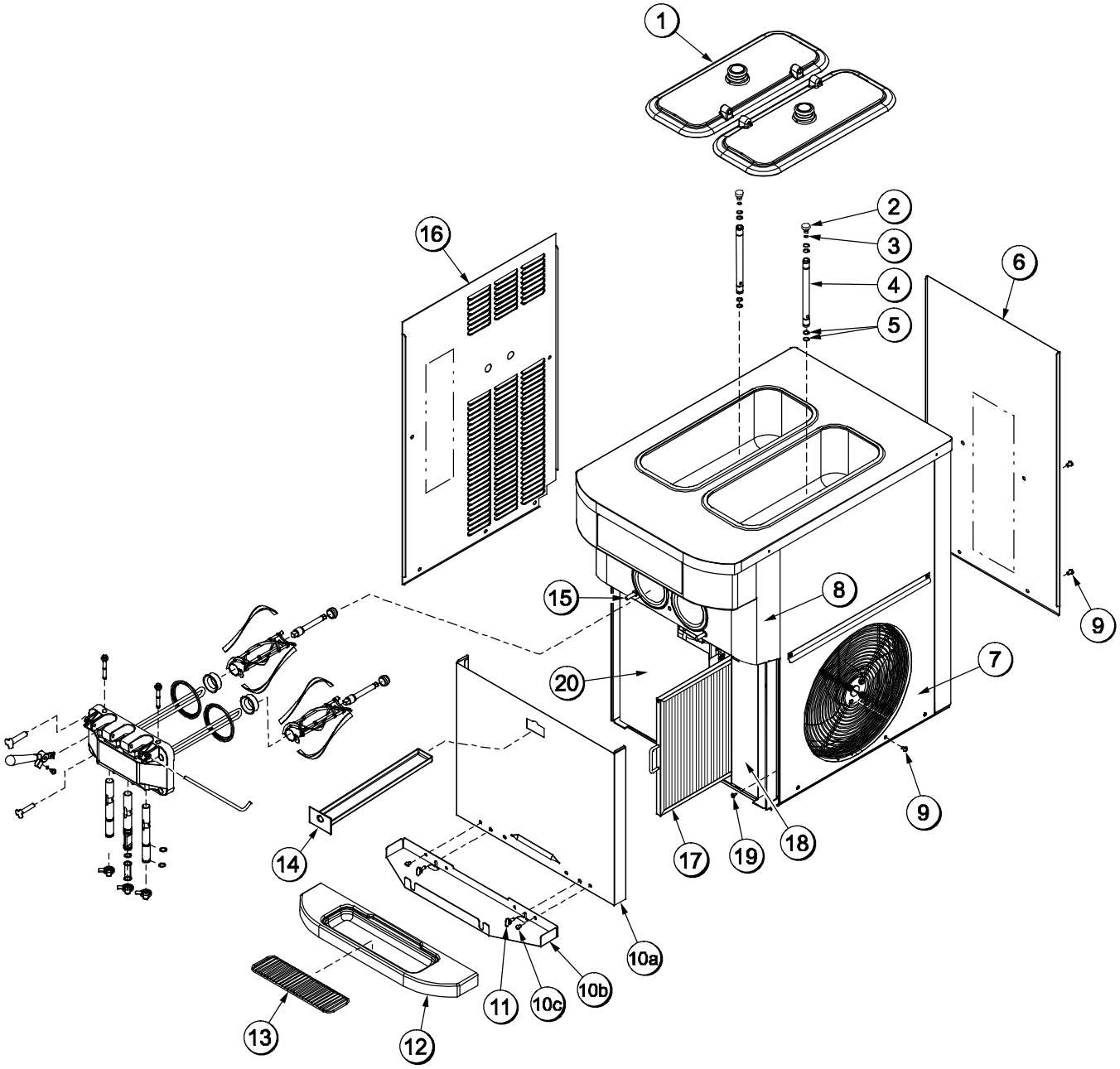

Figure 1

130425

Model C723 Exploded View Parts Identification

ITEM	DESCRIPTION	PART NO.
1	COVER-HOPPER	041682
2	ORIFICE	022465-100
3	O-RING-3/8 OD X .070W	016137
4	TUBE A.-FEED-SS-5/32 HOLE	X29429-2
5	O-RING-.643 OD X .077W	018572
6	PANEL-REAR	069340
7	PANEL A.-SIDE RIGHT	X68854
8	PANEL A.-FRONT	X81843
9	SCREW-1/4-20X3/8 SLTD	011694
10	PANEL A.-SHELF (INCLUDES ITEMS 10a -10c)	X81840
10a	PANEL A.-FRONT-LOWER	X81841
10b	SHELF-DRIP TRAY	080782

ITEM	DESCRIPTION	PART NO.
10c	SCREW-1/4-20X3/8 SLTD	011694
11	SCREW-WING HEAD-FAST	081582
12	TRAY-DRIP	080781
13	SHIELD-SPLASH-WIRE	046177-SP
14	PAN A.-DRIP 15 1/8 LONG	X51601
15	STUD-NOSE CONE	055987
16	PANEL-SIDE LEFT	068851
17	FILTER A.	X81440
18	COVER-ACCESS-FRONT-R.	068844
19	SCREW-10X3/8 SLOTTED HEX	015582
20	COVER-ACCESS-LEFT	081834

Model C723 - Factory Equipped With Agitator

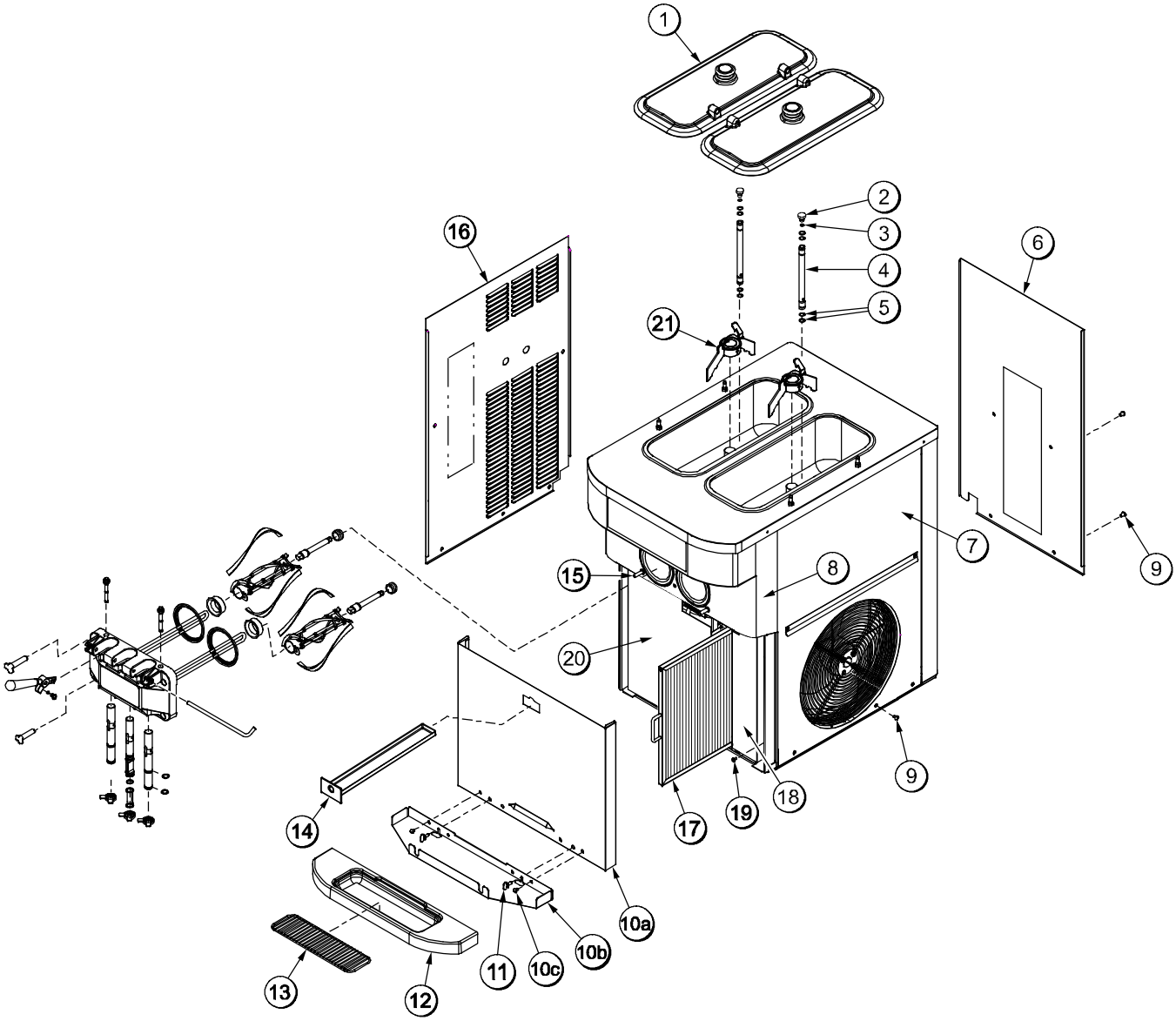

Figure 2

130425

Model C723 Factory Equipped With Agitator Exploded View Parts Identification

ITEM	DESCRIPTION	PART NO.
1	COVER-HOPPER	041682
2	ORIFICE	022465-100
3	O-RING-3/8 OD X .070W	016137
4	TUBE A.-FEED-SS-5/32 HOLE	X29429-2
5	O-RING-.643 OD X .077W	018572
6	PANEL-REAR	069340
7	PANEL A.-SIDE RIGHT	X68854
8	PANEL A.-FRONT	X81843
9	SCREW-1/4-20X3/8 SLTD	011694
10	PANEL A.-SHELF (INCLUDES ITEMS 10a -10c)	X81840
10a	PANEL A.-FRONT-LOWER	X81841
10b	SHELF-DRIP TRAY	080782

ITEM	DESCRIPTION	PART NO.
10c	SCREW-1/4-20X3/8 SLTD	011694
11	SCREW-WING HEAD-FAST	081582
12	TRAY-DRIP	080781
13	SHIELD-SPLASH-WIRE	046177-SP
14	PAN A.-DRIP 15 1/8 LONG	X51601
15	STUD-NOSE CONE	055987
16	PANEL-SIDE LEFT	068851
17	FILTER A.	X81440
18	COVER-ACCESS-FRONT-R.	068844
19	SCREW-10X3/8 SLOTTED HEX	015582
20	COVER-ACCESS-LEFT	081834
21	AGITATOR	056592-SP

Model C723 - Door and Beater Assembly

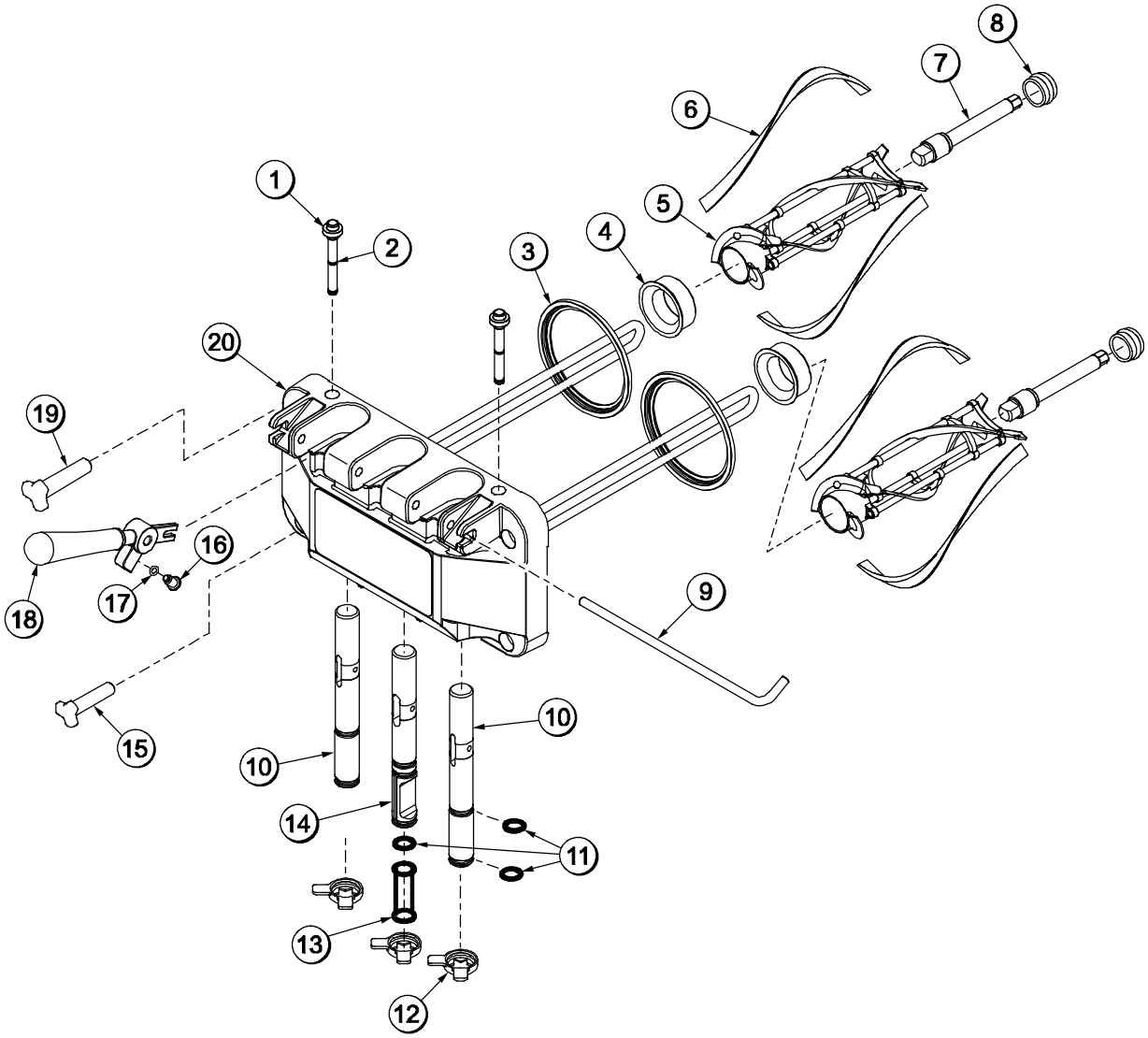

Figure 3

ITEM	DESCRIPTION	PART NO.
1	PLUG-PRIME TWIN	059936
2	O-RING-1/2OD X .070W	024278
3	GASKET-DOOR HT 4"-DOUBLE	048926
4	BEARING-FRONT	050216
5	BEATER A.-2.8QT-HELICORE	X35466
6	BLADE-SCRAPER-PLASTIC	035480
7	SHAFT-BEATER	054194
8	SEAL-DRIVE SHAFT	032560
9	PIN-HANDLE-TWIN	059894
10	VALVE A.-DRAW	X69615

ITEM	DESCRIPTION	PART NO.
11	O-RING-13/16 OD X .103 W	019330
12	CAP-DESIGN 1.010"ID-6 POINT	014218
13	SEAL-DRAW VALVE H-RING	034698
14	VALVE A.-DRAW-CENTER	X62218
15	NUT-STUD-BLACK 2.563 LONG	058764
16	SCREW-ADJUSTMENT-5/16-24	056332
17	O-RING-1/4 OD X .070W 50	015872
18	HANDLE A.-DRAW	X56421-1
19	NUT-STUD-BLACK 3.250 LONG	058765
20	DOOR A.-SH BAF W/PRG	X68889-SER

130425

Optional Carts

Cart A.-ADA (X69400)

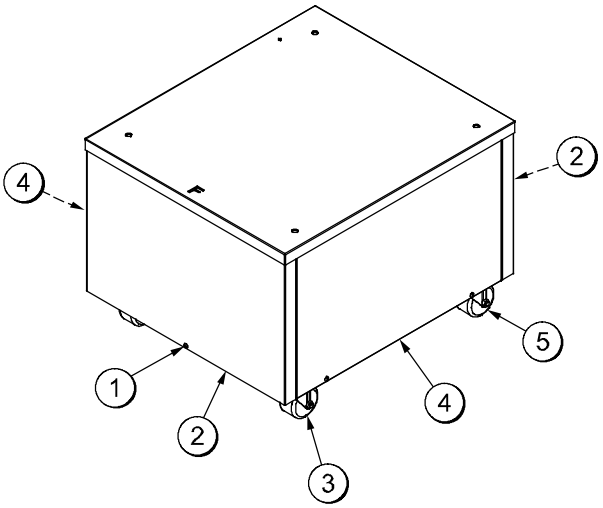

ITEM	DESCRIPTION	PART NO.
1	SCREW-10-32X1/2 SLTD TRUSS	037734
2	PANEL-FRONT/REAR-ADA	069402
3	CASTER-3" SWV 3/4-10 STEM W/BRAKE	030307
4	PANEL-SIDE-CART	069403
5	CASTER-3" SWV 3/4-10 STEM	021279

NOTE: ADA COMPLIANT HEIGHT CART, NOT EQUIPPED WITH A DOOR.

Cart A.-Std (X69425)

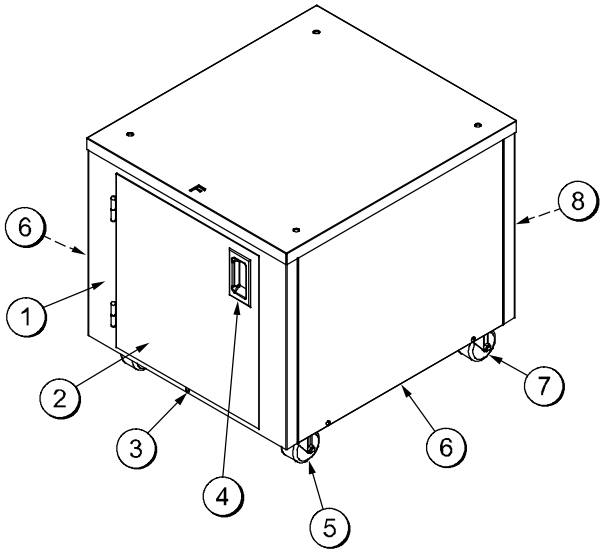

ITEM	DESCRIPTION	PART NO.
1	PANEL A.-STD CART-FRONT	X69426
2	DOOR A.-STD CART	X69295
3	SCREW-10-32X1/2 SLTD TRUSS	037734
4	HANDLE-STNLS FLUSH PULL	019043
5	CASTER-3" SWV 3/4-10 STEM W/BRAKE	030307
6	PANEL-SIDE-STD CART	069428
7	CASTER-3" SWV 3/4-10 STEM	021279
8	PANEL-REAR-STD CART	069429

NOTE: STANDARD HEIGHT CART WITH REVERSIBLE FRONT DOOR PANEL AND REAR PANEL.

Figure 4

Accessories

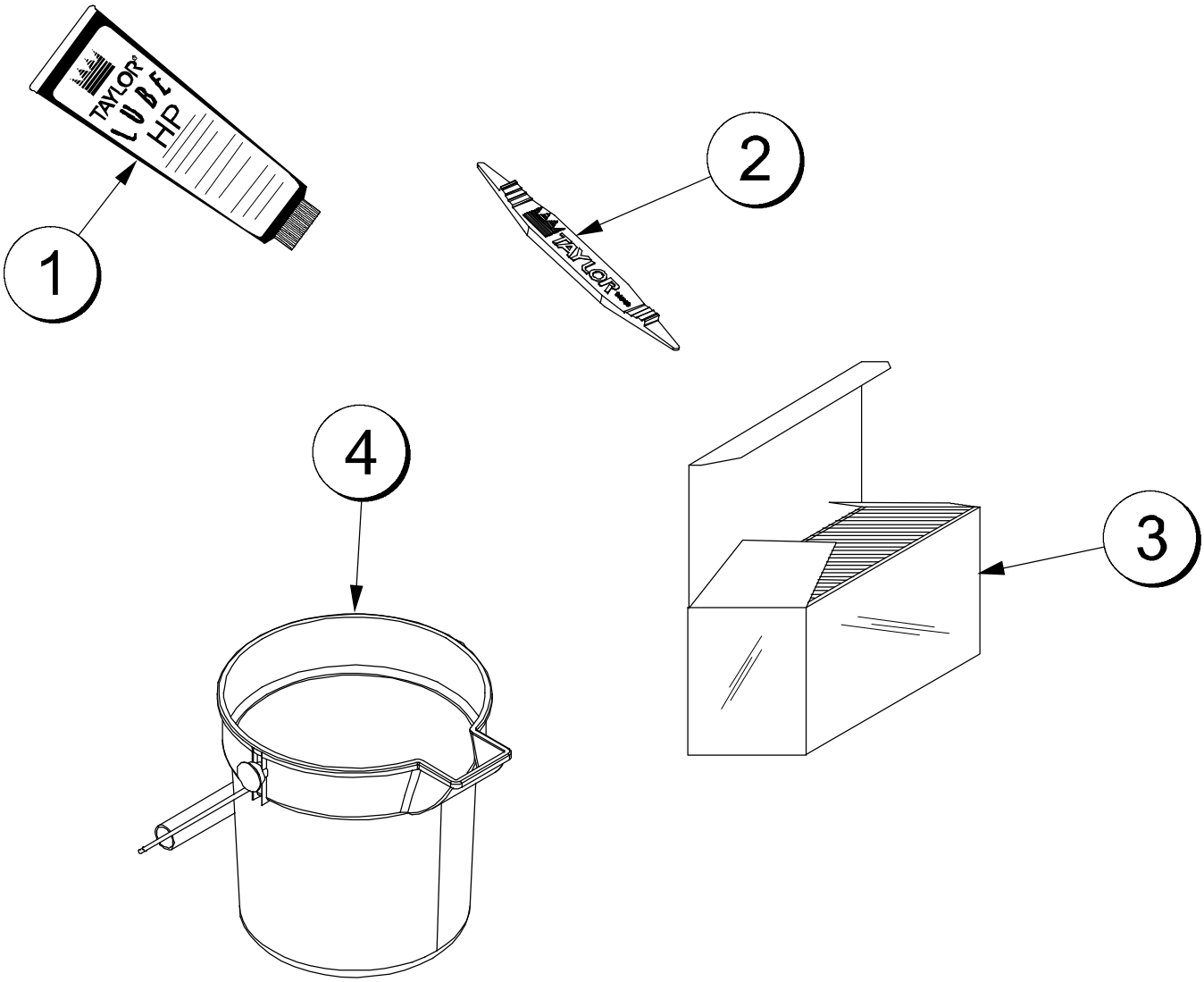

Figure 5

ITEM	DESCRIPTION	PART NO.
1	LUBRICANT-TAYLOR	047518
2	TOOL-O-RING REMOVAL	048260-WHT
*3	SANITIZER-STERA SHEEN	SEE NOTE

ITEM	DESCRIPTION	PART NO.
4	PAIL-MIX 10 QT	013163
**	KIT A.-TUNE-UP	X49463-80

*A sample container of sanitizer is sent with the unit. For reorders, order Stera Sheen part no. 055492 (100 2 oz. packs) or Kay-5 part no. 041082 (200 packs).

**Not Shown.

120106

Brushes

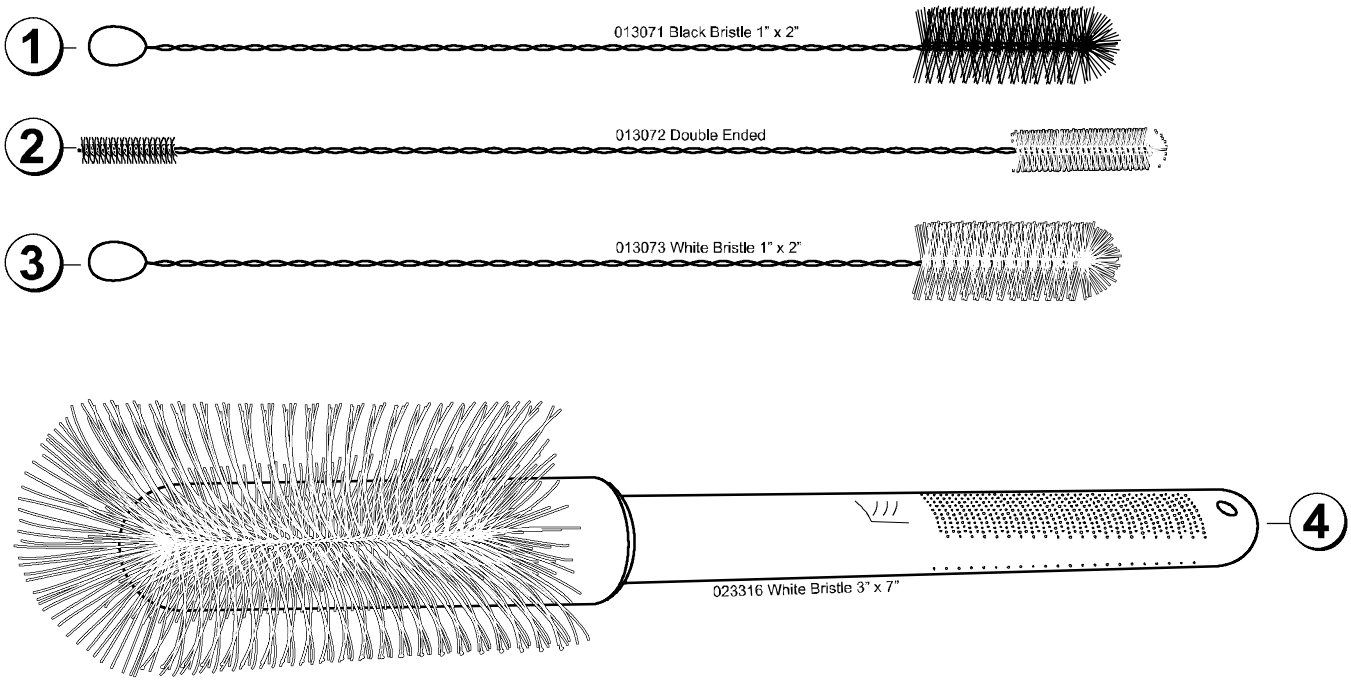

Figure 6

ITEM	DESCRIPTION	PART NO.
1	BLACK BRISTLE BRUSH	013071
2	DOUBLE END BRUSH	013072
3	WHITE BRISTLE BRUSH (1" x 2")	013073

ITEM	DESCRIPTION	PART NO.
4	WHITE BRISTLE BRUSH (3" x 7")	023316

Model C723

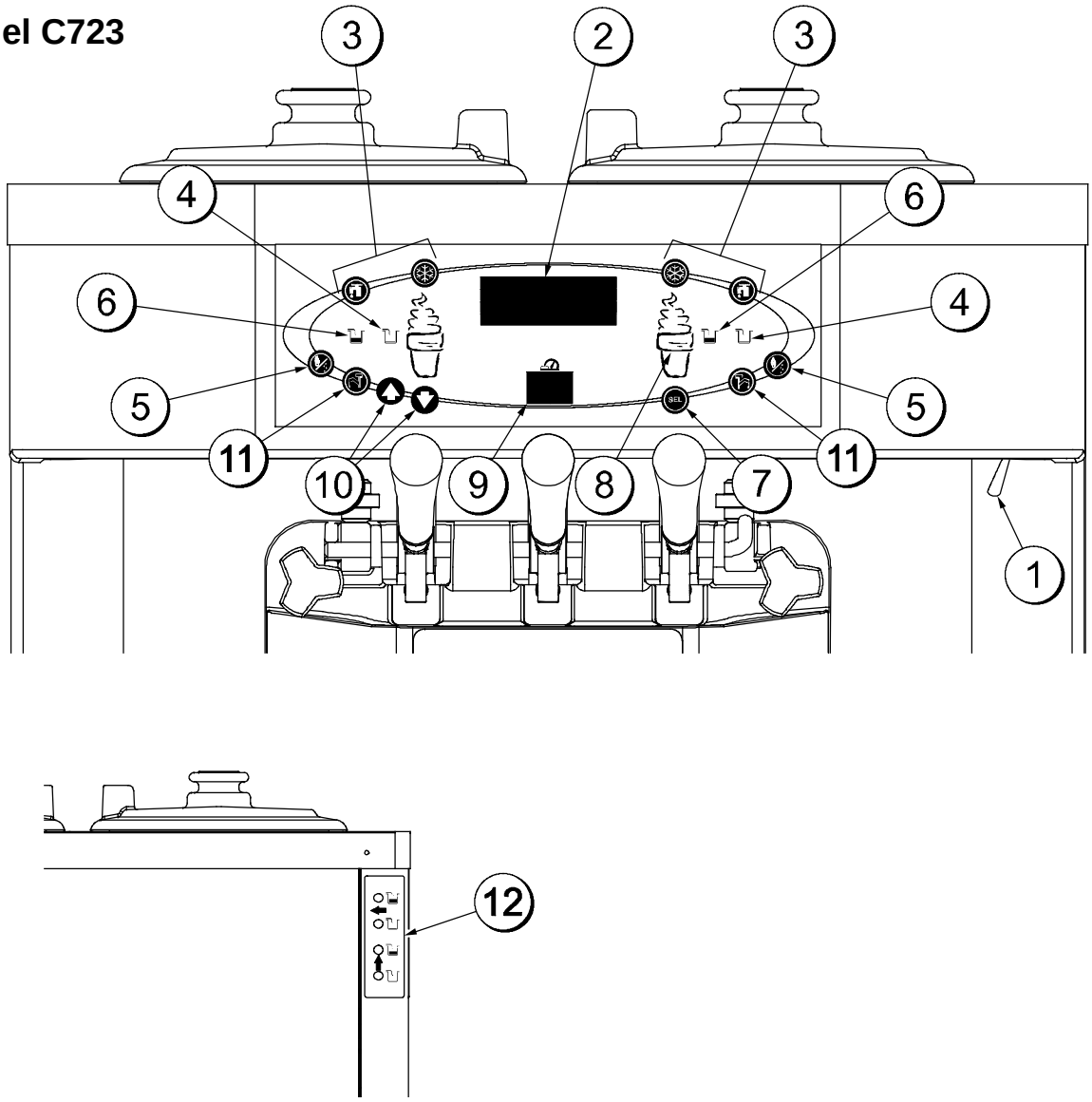

Figure 7

ITEM	DESCRIPTION
1	POWER SWITCH
2	LIQUID CRYSTAL DISPLAY
3	KEYPADS
4	MIX OUT INDICATOR
5	STANDBY KEY
6	MIX LOW INDICATOR

ITEM	DESCRIPTION
7	SELECT KEY
8	SERVICE MENU KEY
9	BRUSH CLEAN COUNTER
10	ARROW KEYS
11	SYRUP HEATER KEY
*12	DECAL-REAR MIX LIGHTS

*FACTORY INSTALLED OPTION

130425

Symbol Definitions

To better communicate in the International arena, symbols have replaced words on many of our operator switches, function, and fault indicators. Your Taylor equipment is designed with these International symbols.

The following chart identifies the symbol definitions.

= SELECT

= ON

= OFF

= UP ARROW

= DOWN ARROW

= AUTO

= WASH

= MIX LOW

= MIX OUT

= MENU DISPLAY

= STANDBY

= TOPPING HEATER

Power Switch

When placed in the ON position, the power switch allows control panel operation.

Fluorescent Display

The fluorescent display is located on the front control panel. During normal operation, the display is blank. The display is used to show menu options and notifies the operator if a fault is detected. On International models, the display will indicate the temperature of the mix in the hopper.

Indicator Lights

MIX LOW - When the MIX LOW symbol is illuminated, the mix hopper has a low supply of mix and should be refilled as soon as possible.

MIX OUT - When the MIX OUT symbol is illuminated, the mix hopper has been almost completely exhausted and has an insufficient supply of mix to operate the freezer. At this time, the AUTO mode is locked out and the freezer will be placed in the STANDBY mode. To initiate the refrigeration system, add mix to the mix hopper and touch the AUTO symbol. The freezer will automatically begin operation.

Optional feature: Some freezers are equipped with rear indicator lights.

Auto Symbol

The AUTO symbol will illuminate when it is touched. This indicates that the refrigeration system has been activated. In the AUTO mode, the WASH or STANDBY functions are automatically cancelled.

Wash Symbol

The WASH symbol will illuminate when it is touched. This indicates beater motor operation. The STANDBY or AUTO modes must be cancelled first to activate the WASH mode.

Note: An indicating light and an audible tone will sound whenever a mode of operation has been selected. To cancel any function, touch the key again. The light and the mode of operation will shut off.

Standby Symbol

During long “No Sale” periods, the unit can be placed in the Standby mode. This maintains product temperatures below 40°F (4.4°C) in both the hopper and the freezing cylinder and helps prevent overbeating and product breakdown.

To activate Standby, select the STANDBY key or enter the access code for the Manager Menu and select the Standby Mode option (see pages 21 and 24). The STANDBY symbol will illuminate, indicating the Standby feature has been activated.

Using clean and sanitized hands, remove the air orifice. Lubricate the o-rings located on the end of the feed tube without the mix delivery hole. Place that end of the tube into the mix inlet hole.

Feed Tube Position During Standby Operation:

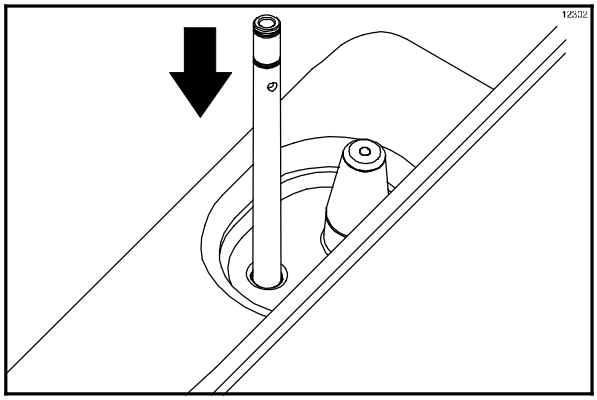

Figure 8

IMPORTANT: Make sure the level of mix in the hopper is below the mix delivery hole in the feed tube. Failure to follow this instruction may result in lower product quality when normal operation is resumed.

To resume normal operation, press the AUTO symbol . When the unit cycles off, the product in the freezing cylinder will be at serving viscosity. Using clean and sanitized hands, turn the feed tube over and place the end of the tube with the mix delivery hole into the mix inlet hole. Install the air orifice.

Feed Tube Position During Normal Operation:

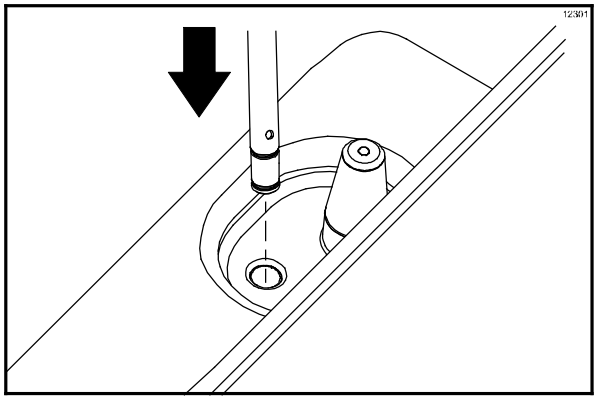

Figure 9

Reset Mechanism

The reset buttons are located in the left side panel of the machine. They protect the beater motors from an overload condition. Should an overload occur, the reset mechanism will trip. To properly reset the freezer, place the power switch in the OFF position. Press the reset button firmly. Turn the power switch to the ON position. Touch the WASH symbol and observe the freezer's performance.

WARNING: Do not use metal objects to press the reset button. Failure to comply may result in severe personal injury or death.

If the beater motor is turning properly, touch the WASH symbol to cancel the cycle. Touch the AUTO symbol to resume normal operation. If the freezer shuts down again, contact your authorized service technician.

130703

Feed Tube

One end of the feed tube has a hole in the side of the tube and the other end does not. The air orifice is used to meter a certain amount of air into the freezing cylinder. It maintains overrun and allows enough mix to enter the freezing cylinder after a draw. (See Figure 10.)

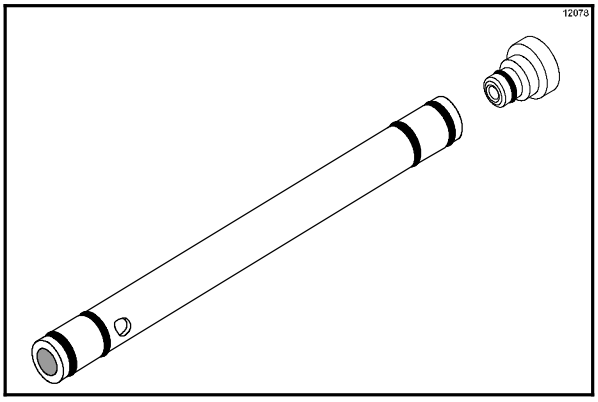

Figure 10

The feed tube serves two purposes.

1. **Normal Operation**

   During normal operation, the end of the feed tube with the mix delivery hole is placed in the mix inlet hole. Every time the draw handle is raised, new mix and air from the hopper flow into the freezing cylinder. This keeps the freezing cylinder properly loaded and maintains overrun.

Feed Tube Position During Normal Operation:

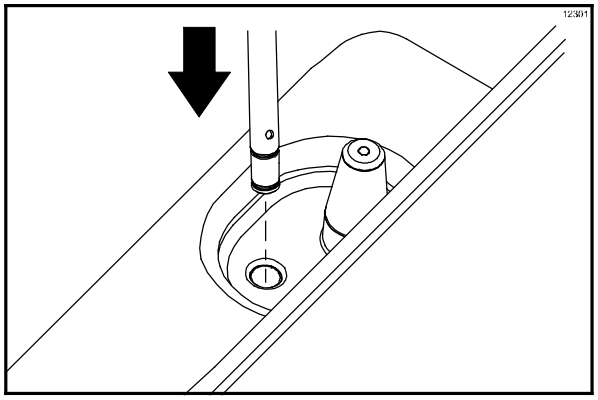

Figure 11

2. **Long "No Sale" Periods**

   During long "No Sale" periods, the unit can be placed in the Standby mode. This maintains product temperatures below 40°F (4.4°C) in both the hopper and the freezing cylinder and helps prevent overbeating and product breakdown.

   To activate Standby, select the STANDBY key or enter the access code for the Manager Menu and select the Standby Mode option (see pages 21 and 24). The STANDBY symbol will illuminate, indicating the Standby feature has been activated.

   Using clean and sanitized hands, remove the air orifice. Lubricate the o-rings located on the end of the feed tube without the mix delivery hole. Place that end of the tube into the mix inlet hole.

Feed Tube Position During Standby Operation:

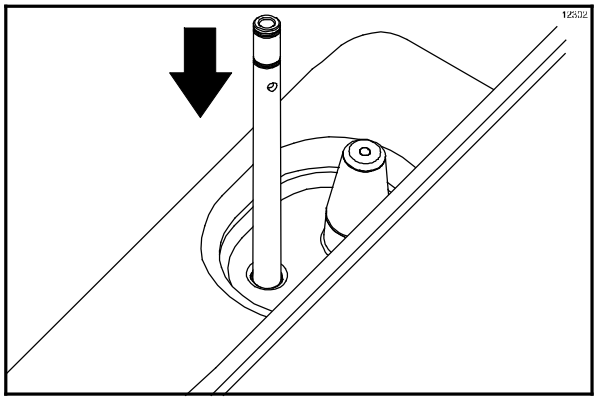

Figure 12

IMPORTANT: Make sure the level of mix in the hopper is below the mix inlet hole in the feed tube. Failure to follow this instruction may result in lower product quality when normal operation is resumed.

Adjustable Draw Handle

This unit features an adjustable draw handle to provide the best portion control, giving a better, consistent quality to your product and controlling costs. The draw handle should be adjusted to provide a flow rate of 5 to 7-1/2 oz. (142 to 213 g.) of product by weight per 10 seconds. To INCREASE the flow rate, tighten the screw. To DECREASE the flow rate, loosen the screw. (See Figure 13.)

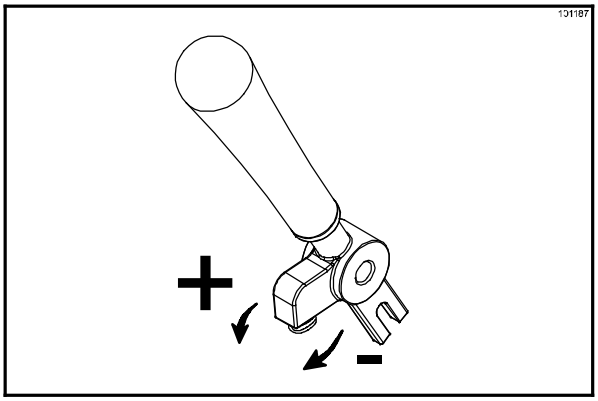

Figure 13

Operating Screen Descriptions

The fluorescent display located in the center of the control panel is normally blank during the daily operation of the machine. The display is activated when the SEL symbol or the Manager's Menu is selected. The display screen will also alert the operator of specific faults detected by the control.

Power Up

When the machine is powered, the control system will initialize to perform a system check. The screen will display “INITIALIZING”. There are four types of data the system will check: LANGUAGE, SYSTEM DATA, CONFIG DATA, and LOCKOUT DATA.

If the system detects corrupt data during “Initializing.....”, the detected faults will be displayed for acknowledgement after the “SAFETY TIMEOUT” display, if the power switch is on. The faults may be “CORRUPTED LANGUAGE,” CONFIG CRC ERR,” “SYSTEM CRC ERR, “FAULT HISTORY, ”LOCKOUT CRC ERR,” or “POWER FAILURE.”

Once the system has initialized, the number of days remaining before the next required brush cleaning is indicated on the control panel and the SAFETY TIMEOUT screen is displayed with the alarm turned on. (See Figure 14.)

SAFETY TIMEOUT
ANY KEY ABORTS

Figure 14

The SAFETY TIMEOUT screen will be displayed with the alarm on for 60 seconds, or until any control symbol is selected.

After the safety timeout has been completed and the power switch is OFF, the following screen is displayed. (See Figure 15.)

POWER SWITCH OFF
- = - = - = - = - = -
UNIT CLEANED

Figure 15

Power Switch ON

When the power switch is placed in the ON position, the control panel touch keys become operative. The fluorescent display will be either blank or will indicate that the unit has been cleaned. (See Figure 16.)

UNIT CLEANED

Figure 16

Brush Clean Counter

The Brush Clean Counter (item 9 on page 16) will display the number of hours since the freezer was last brush cleaned. After hour 99, it will change to a letter and a number (example: A0, A1, ... B0, B1, etc.).

Manager's Menu

The Manager's Menu is used to enter the operator function displays. To access the Menu, touch the center of the CONE symbol on the control panel on the right side of the machine. The arrow symbols, the SEL symbol, and the CONE symbol will be lit when the ACCESS CODE screen is displayed. (See Figure 17.)

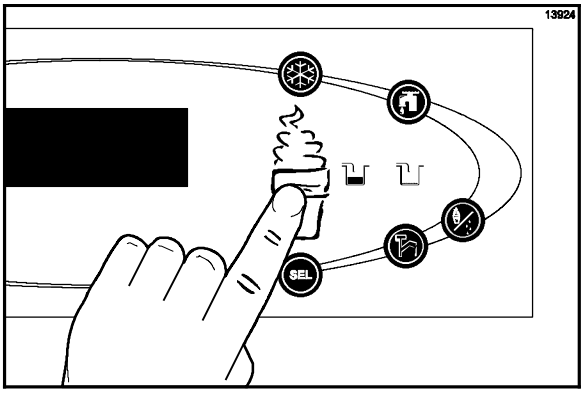

Figure 17

In the Menu program, the arrow symbols and the SEL symbol will function as menu keys.

UP ARROW - increases the value above the cursor and is used to scroll upward in text displays.

DOWN ARROW - decreases the value above the cursor and is used to scroll downward in text displays.

SEL - advances the cursor position to the right and is used to select menu options.

Note: The machine will continue operation in the mode it was in when the menu was selected. However, the control keys will not be lit and are non-functional when the Manager's Menu is displayed.

Entering Access Code

With the ACCESS CODE screen on the display, use the SEL symbol to set the first code number in the cursor position. When the correct number is selected, touch the SEL symbol to move the cursor to the next number position. (See Figure 18.)

ENTER ACCESS CODE

8 3 0 9

Figure 18

Continue to enter the proper access code numbers (8309) until all four numbers are displayed, and then touch the SEL symbol. The Manager's menu list will display on the screen, provided the correct access code is entered.

If an incorrect number is entered for the access code, the display will exit the Menu program when the SEL symbol is selected.

Menu Options

Touch the ARROW symbols to move up or down through the Menu. Select a Menu option by touching the SEL symbol. Exit the Menu program by selecting EXIT FROM MENU or touch the CONE symbol .

The following menu options are listed in the Manager's Menu.

EXIT FROM MENU
SERVINGS COUNTER
SET CLOCK
AUTO START TIME
STANDBY MODE
MIX LEVEL AUDIBLE
FAULT DESCRIPTION
FAULT HISTORY
LOCKOUT HISTORY
SYSTEM INFORMATION
CURRENT CONDITIONS
NET SERVICE PIN

Selecting “EXIT FROM MENU” will exit the Manager's Menu and then return the control panel symbols to normal operation.

The SERVINGS COUNTER screen is used to reset the servings counter to zero. (Note: The SERVINGS COUNTER automatically resets to zero when the machine is brush cleaned.) (See Figure 19.)

```
                SERVINGS COUNTER

            0         0         0
> Next
```

Figure 19

Reset the SERVINGS COUNTER by selecting the SEL symbol to advance to the next screen. Select the UP arrow symbol to move the arrow (>) to YES and touch the SEL symbol. The servings counter will reset to zero and exit back to the Manager's Menu. (See Figure 20.)

```
            Reset Counters
            ARE YOU SURE?
            Yes
>           No
```

Figure 20

The SET CLOCK option allows the Manager to adjust the control clock date and time. The date and time may only be changed after the freezer has been manually cleaned, but before it has been placed in the AUTO or STANDBY mode. The following message will be displayed if the SET CLOCK option is selected when the machine is not in a brush clean state. (See Figure 21.)

```
SET CLOCK
12:01              2/10/2011
NO CHANGES ALLOWED
Press Any Key
```

Figure 21

To change the date or time, select the SET CLOCK option in the menu. Touch the UP arrow symbol to advance the arrow from “Exit” to “Change”, and then touch the SEL symbol to select the Change option. (See Figure 22.)

```
SET CLOCK
12:01              2/10/2011
  Change
> Exit
```

Figure 22

Change the time by touching the UP arrow with the cursor under the hour position. Move the cursor to the minutes position by touching the SEL symbol. Once the correct minutes are entered, touch the SEL symbol to advance the cursor to the month. (See Figure 23.)

```
SET CLOCK
12:01              2/10/2011

> Exit
```

Figure 23

Enter the correct month, day, and year. After they have been entered, touch the SEL symbol to advance to the DAYLIGHT SAVING TIME (DST) screen. (See Figure 24.)

```
            DAYLIGHT SAVING TIME
                  ENABLED
>           Enable
            Disable
```

Figure 24

Pressing the UP or DOWN arrow symbols will move the arrow to “Enable” or “Disable”. Pressing the SEL symbol next to “Disable” selects that option and returns to the Manager Menu. Pressing the SEL symbol next to “Enable” selects that option and displays the second screen. (See Figure 25.)

```
MAR Second Sunday
NOV First Sunday
  Change
> Exit
```

Figure 25

If the correct Sunday for the time change is not displayed, then “Change” should be selected. Pressing the SEL symbol with the arrow next to “Change” displays the third screen. Press the UP or DOWN symbol to move the arrow to the appropriate month for the start of DST. (See Figure 26.)

```
              DST START MONTH
>       MAR
        APR
        MAY
```

Figure 26

Pressing the SEL symbol with the arrow next to the appropriate month will display the following screen. (See Figure 27.)

```
              DST START WEEK
>       Second Sunday
        Third Sunday
        Fourth Sunday
```

Figure 27

Pressing the UP or DOWN symbol will move the arrow to the appropriate week for the start of DST. Pressing the SEL symbol next to the appropriate week will display the following screen. Press the UP or DOWN symbol to move the arrow to the appropriate month for the end of DST. (See Figure 28.)

```
              DST END MONTH

>       NOV
        DEC
```

Figure 28

Pressing the SEL symbol next to the appropriate month will display the following screen. Press the UP or DOWN symbol to move the arrow to the appropriate week for the end of DST. (See Figure 29.)

```
              DST END WEEK
>       First Sunday
        Second Sunday
        Third Sunday
```

Figure 29

Pressing the SEL symbol with the arrow by the appropriate week will select that setting and return to the Manager's Menu.

The AUTO START TIME option allows the Manager to set the time of day at which the machine automatically enters the AUTO mode from the STANDBY mode. The machine must be in the STANDBY mode in order to AUTO start at the programmable time. The AUTO START TIME can also be disabled and require starting the AUTO mode manually. (See Figure 30.)

```
              AUTO START TIME
                 DISABLED
        Enable
>       Disable
```

Figure 30

Enable the AUTO START TIME by selecting the UP arrow symbol to move the arrow to “Enable.” Touch the SEL symbol to advance to the next screen. (See Figure 31.)

```
              AUTO START TIME
                   00:00
        Change
>       Exit
```

Figure 31

Program the AUTO START TIME by selecting the UP arrow symbol to move the arrow to “Change.” Touch the SEL symbol to advance to the next screen. (See Figure 32.)

```
AUTO START TIME
00:00
```

Figure 32

Use the arrow symbols to program the AUTO START TIME by increasing or decreasing the hour setting above the cursor. Touch the SEL symbol to advance the cursor and program the minutes setting. Select the SEL symbol to return to the previous screen with the new time setting displayed. Select the SEL symbol to exit the screen and return to the Manager's Menu.

The STANDBY option is used to manually place either side of the machine in the Standby mode during long, no draw periods. Select the STANDBY screen from the Menu. Touch the SEL symbol to activate Standby.

Discontinue Standby operation by exiting the Manager's Menu and selecting the AUTO mode. (See Figure 33.)

```
STANDBY MODE
  LEFT
  RIGHT
> Exit
```

Figure 33

The MIX LEVEL AUDIBLE option, when enabled, will alert the operator with an audible tone when there is a mix low or mix out condition. The following screen is displayed upon selecting this option. (See Figure 34.)

```
MIX LEVEL AUDIBLE
ENABLED
>       Enable
        Disable
```

Figure 34

Disable the audible tone feature by selecting the UP arrow symbol to move the arrow to “Disable.” Select the SEL symbol to save the new setting and return to the Manager's Menu. The control panel icons for Mix Low and Mix Out will light as the mix level drops in the hopper but the audible tone will be disabled.

The FAULT DESCRIPTION screen lists any faults detected by the control and allows the Manager to clear them from the system. Faults are displayed on the second and/or third line. (See Figure 35.)

```
FAULT DESCRIPTION
L: Beater Overload
R: Beater Overload
```

Figure 35

Pressing the SEL symbol displays the next fault or returns to the Manager's Menu if no other faults exist. Pressing the SEL symbol any time faults are displayed will clear corrected faults upon returning to the Manager's Menu. Press the Menu symbol to return to the Manager's Menu.

The FAULT HISTORY screen displays a history of the last 100 faults. Page numbers are displayed in the upper right-hand corner. Page 1 contains the most recent fault. Use the arrow symbols to cycle through the history pages. The date and time of the event are displayed on the second line. The third line displays the reason for the fault. (See Figure 36.)

```
FAULT HISTORY                    1
 02/27/11                    12:58
 HPCO COMPRESSOR
> Exit
```

Figure 36

The LOCKOUT HISTORY screen displays a history of the last 100 hardlocks, brush clean dates, etc. (See Figure 37.)

```
LOCKOUT HISTORY
02/27/11                     12:58
<       HPR THERM FAIL
>       Exit
```

Figure 37

Use the arrow symbols to advance forward or backward to view each screen. The following list indicates the variable messages that may appear. Press the SEL key to return to the Manager's Menu.

Faults Occurring While in AUTO or Standby Mode

L - R HPR Therm Fail - The hopper thermistor failed. Call for service.

L - R BRL Therm Fail - The freezing cylinder thermistor failed. Call for service.

L - R HPR>59F (15C) - The mix temperature in the hopper exceeded 59°F (15°C).

L - R BRL>59F (15C) - The mix temperature in the freezing cylinder exceeded 59°F (15°C).

L - R HPR>45F (7C) AFTER 1 HR - The mix temperature in the hopper was above 45°F (7°C) more than one hour.

L - R BRL>45F (7C) AFTER 1 HR - The mix temperature in the freezing cylinder was above 45°F (7°C) more than one hour.

L - R HPR>41F (5C) AFTER 4 HR - The mix temperature in the hopper was above 41°F (5°C) more than four hours.

L - R BRL>41F (5C) AFTER 4 HR - The mix temperature in the freezing cylinder was above 41°F (5°C) more than four hours.

L - R HPR>41F (5C) AFTER PF - The mix temperature in the hopper was above 41°F (5°C) more than four hours, following a power failure.

L - R BRL>41F (5C) AFTER PF - The mix temperature in the freezing cylinder was above 41°F (5°C) more than four hours, following a power failure.

Note: Refer to your local health codes regarding temperature recommendations for procedures to follow if these fault screens appear.

The SYSTEM INFORMATION is displayed on three separate screens. The first screen contains the control and software version installed in the machine. (See Figure 38.)

```
SOFTWARE VERSION
 C723 CONTROL UVC4
 VERSION V00.00.000
> Next
```

Figure 38

Touch the SEL symbol to advance to the next system information screen containing the software language version. (See Figure 39.)

```
Language
V3.00 English

> Next
```

Figure 39

Touch the SEL symbol to advance to the third system information screen containing the model bill of material and machine serial number. Touching the SEL symbol again will return to the Manager's Menu. (See Figure 40.)

```
B.O.M.  C700000000
S/N     K0000000

> Next
```

Figure 40

The CURRENT CONDITIONS screen displays the current viscosity, and the hopper and barrel temperatures. Press the SEL or MENU symbols to return to the Manager's Menu. (See Figure 41.)

```
VISC        0.0    0.0
HOPPER     41.0   41.0
BARREL     41.0   41.0
```

Figure 41

The NET SERVICE PIN screens allows the Manager to initialize a network connection for networking kitchens. (See Figure 42.)

```
NET SERVICE PIN
  ARE YOU SURE?
  Yes
> No
```

Figure 42

Use the arrow symbols to move the arrow. Pressing the SEL symbol with the arrow next to “No” will return to the Manager's Menu. Pressing the SEL symbol with the arrow next to “Yes” will connect to the network if a gateway card is connected.

Note: If “Yes” is selected, it may take a few moments for the memory to clear and the defaults to load. The display may show the message “COMMUNICATIONS FAILURE” during this time.

Section 6 Operating Procedures

The Model C723 is a medium capacity soft serve machine. Mix is stored in the hoppers. The mix flows by gravity through a feed tube into the freezing cylinders. The unit is equipped with a three spout door and two 2.8 quart (2.7 liter) capacity freezing cylinders.

Note: Some units are equipped with a factory-installed agitator option. For these units, please note the agitator instructions.

We begin our instructions at the point where we enter the store in the morning and find the parts disassembled and laid out to air dry from the previous night's cleaning.

These opening procedures will show you how to assemble the parts into the freezer, sanitize them, and prime the freezer with fresh mix in preparation to serve your first portion.

If you are disassembling the machine for the first time or need information to get to this starting point in our instructions, turn to page 36, “Disassembly”, and start there.

Assembly

Note: When lubricating parts, use an approved food grade lubricant (example: Taylor Lube).

MAKE SURE THE POWER SWITCH IS IN THE “OFF” POSITION! Failure to follow this instruction may result in severe personal injury from hazardous moving parts.

Step 1
Lubricate the groove on the beater drive shaft.

Step 2
Slide the beater drive shaft boot seal over the small end of the beater drive shaft and engage into the groove on the shaft.

Step 3
Heavily lubricate the inside portion of the boot seal. Also lubricate the flat end of the boot seal that comes in contact with the rear shell bearing.

Step 4
Apply an even coat of lubricant to the shaft.
DO NOT lubricate the hex end.

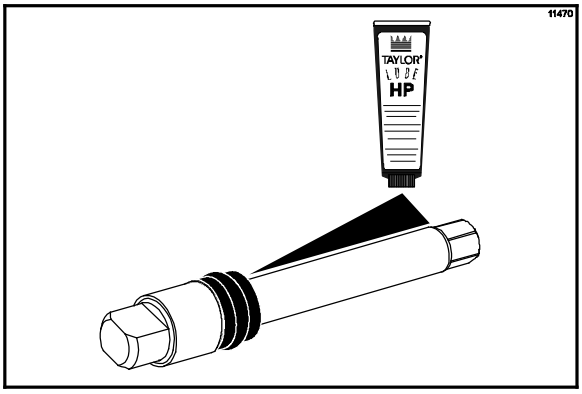

Figure 43

Note: To ensure that mix does not leak out of the back of the freezing cylinder, the middle section of the boot seal should be convex or extend out from the seal. If the middle section of the boot seal is concave or extending into the middle of the seal, turn the seal inside out.

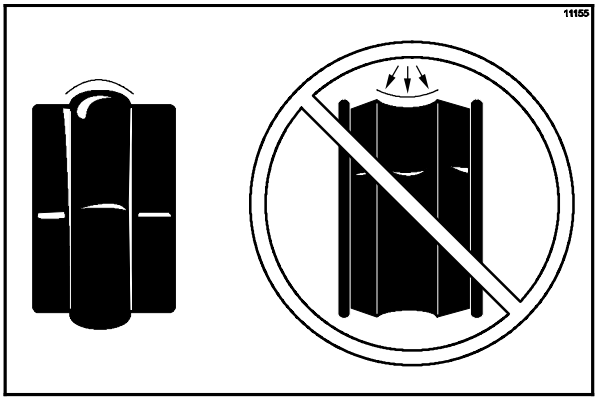

Figure 44

Step 5
Insert the beater drive shaft through the rear shell bearing in the freezing cylinder and engage the hex end firmly into the drive coupling.

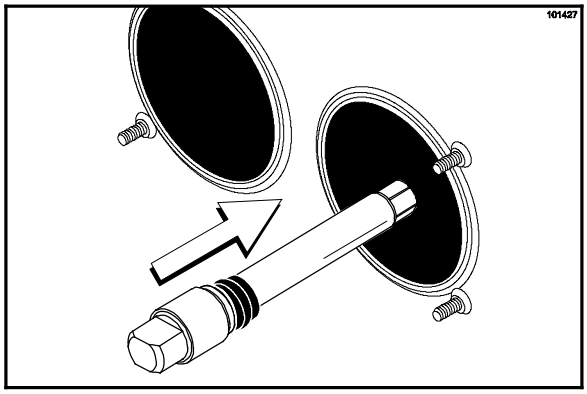

Figure 45

USE EXTREME CAUTION when handling the beater assembly. The scraper blades are very sharp and may cause injury.

Step 6
Before installing the beater assembly**,** check the scraper blades. If they are in good condition, take one of the scraper blades and slip it under the hook at the front of the beater. Wrap the blade around the beater, following the helix and pushing the blade down onto the helix as you wrap. At the back end of the beater, slip the blade under the hook.

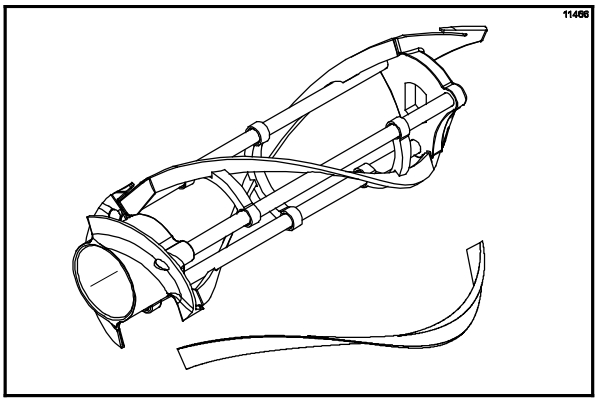

Figure 46

Repeat this step for the second scraper blade.

Step 7
Holding the beater securely, slide the beater into the freezing cylinder about one-third of the way in. Looking into the freezing cylinder, align the hole at the rear of the beater with the flats on the end of the drive shaft.

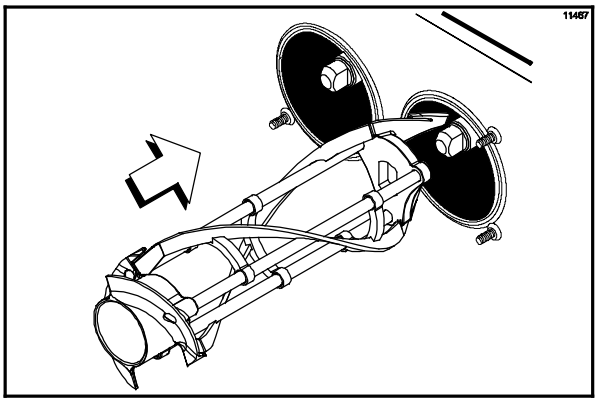

Figure 47

Step 8
Slide the beater the remainder of the way into the freezing cylinder and over the end of the drive shaft. The beater should fit snugly, but not so tightly that the beater cannot be turned slightly to engage the drive shaft.

Step 9
Make sure the beater assembly is in position over the drive shaft. Turn the beater slightly to be certain that the beater is properly seated. When in position, the beater will not protrude beyond the front of the freezing cylinder.

Step 10
Repeat these steps for the other side of the machine.

Step 11
To assemble the freezer door, place the door gaskets into the grooves on the back of the freezer door. Slide the front bearings over the baffle rods. The flanged edges should be against the door. DO NOT lubricate the gaskets or bearings.

Step 12
Slide the two o-rings into the grooves on each prime plug. Apply an even coat of Taylor Lube to the o-rings and shafts.

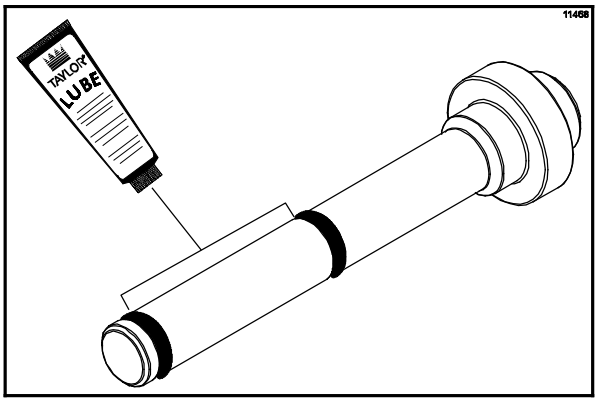

Figure 48

Step 13
Insert the prime plugs into the holes in the top of the freezer door and push down.

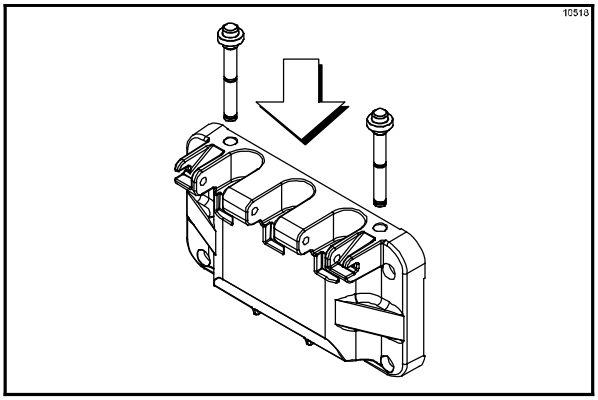

Figure 49

Step 14
To install the freezer door, insert the baffle rods through the beaters in the freezing cylinders.

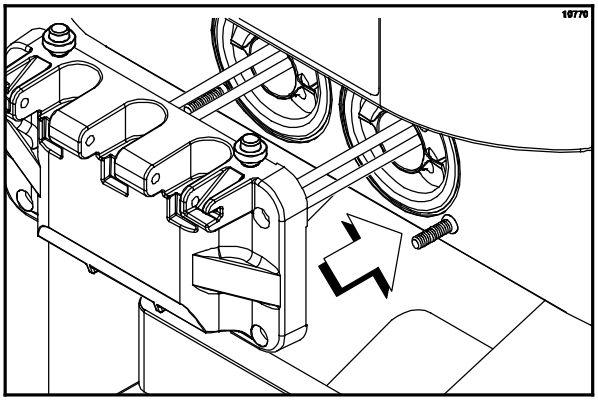

Figure 50

Step 15
With the door seated on the freezer studs, install the handscrews. Use the long handscrews on the top and the short handscrews on the bottom. Tighten them equally in a criss-cross pattern to insure the door is snug.

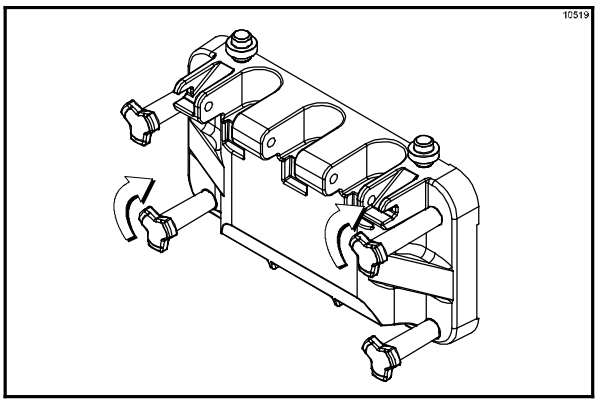

Figure 51

Step 16
Slide the three o-rings into the grooves of each standard draw valve. Slide the H-ring and o-ring into the grooves of the center draw valve. Lubricate the H-ring and o-rings.

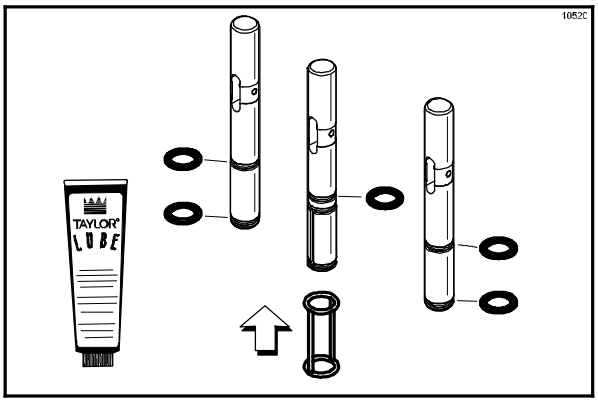

Figure 52

Step 17
Lubricate the inside of the freezer door spouts, top and bottom.

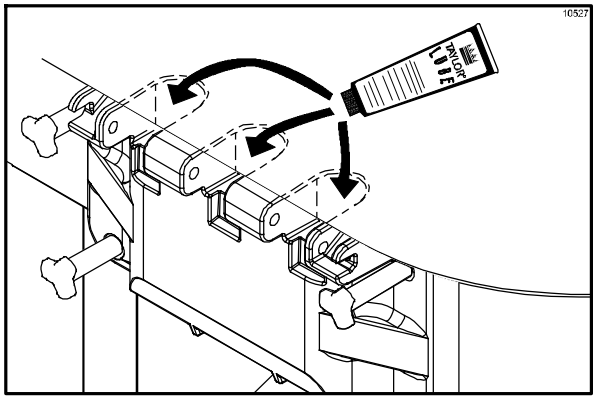

Figure 53

Step 18
Insert the draw valves from the bottom until the slot in the draw valves come into view.

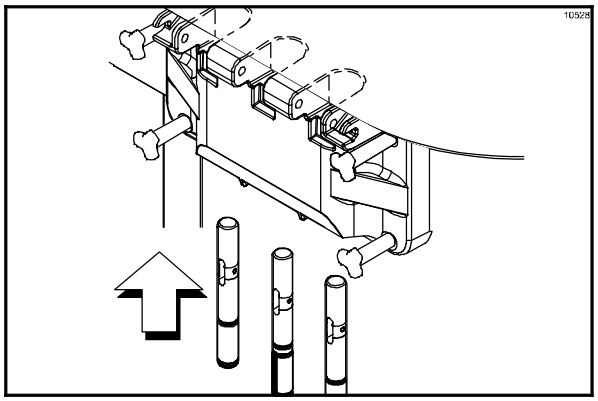

Figure 54

Step 19
Slide the fork of the draw handles in the slot of the draw valves, starting from the right.

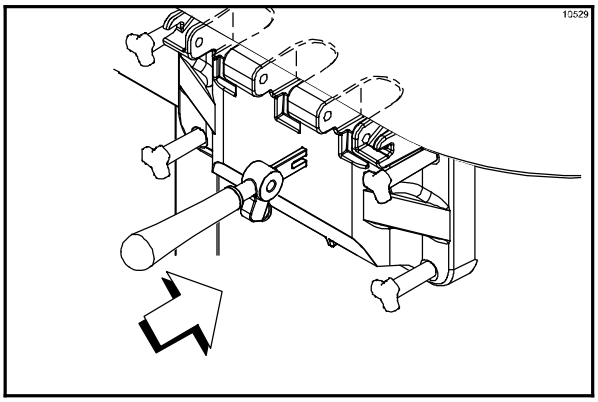

Figure 55

Step 20
Slide the pivot pin through each draw handle as they are inserted into the draw valves.

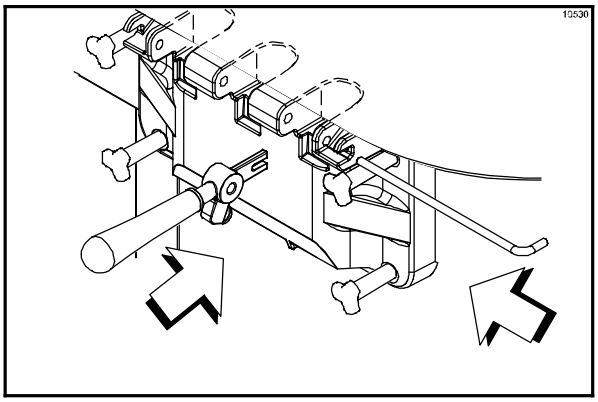

Figure 56

Note: This freezer features three adjustable draw handles to provide portion control, giving a better consistent quality to your product and controlling costs. The draw handle should be adjusted to provide a flow rate of 5 to 7-1/2 oz. (142 g. to 213 g.) of product by weight per 10 seconds.

To INCREASE the flow rate, turn the adjustment screw CLOCKWISE. Turn the adjustment screw COUNTER-CLOCKWISE to DECREASE the flow rate.

Step 21
Snap the design caps over the bottom of the door spouts.

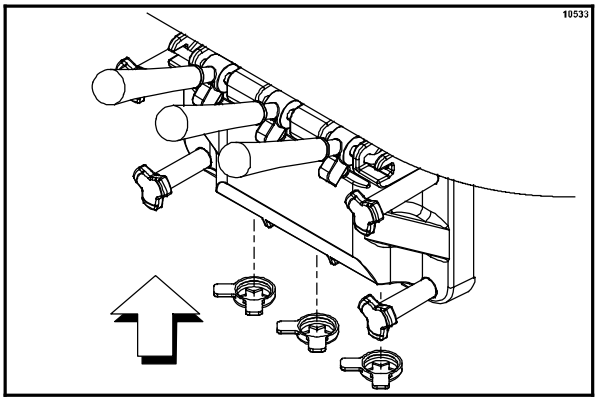

Figure 57

Step 22
Slide the drip pan into the hole in the front panel.

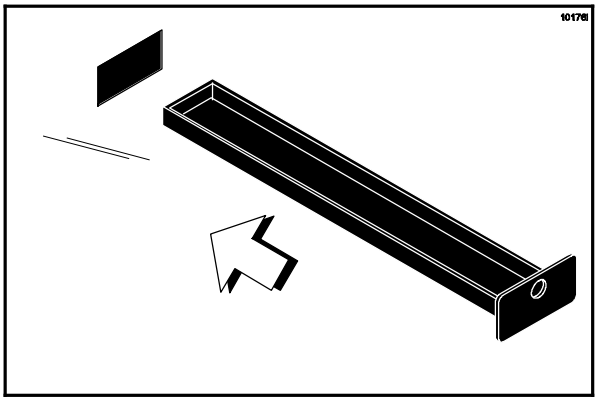

Figure 58

Step 23
Install the front drip tray and splash shield under the door spouts.

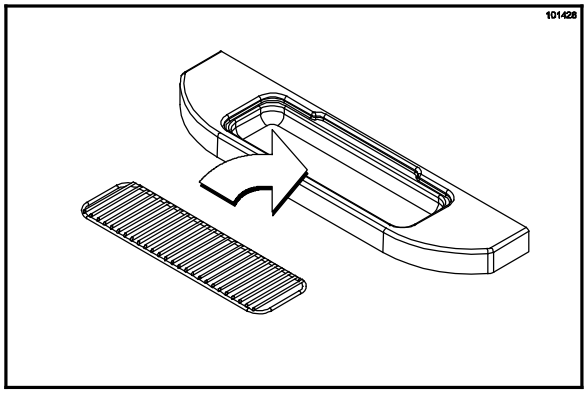

Figure 59

Step 24
Slide two o-rings on one end of the feed tube. Slide two o-rings on the other end of the feed tube.

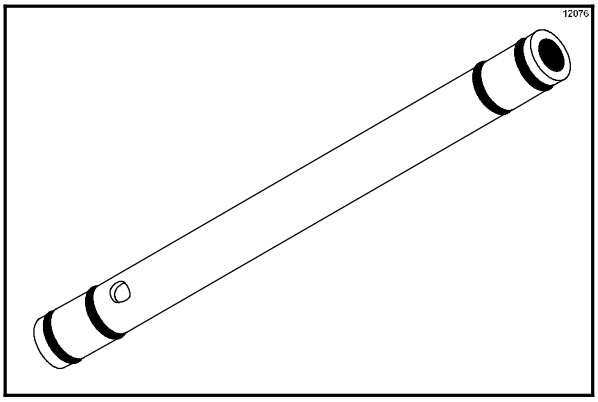

Figure 60

Step 25
Slide the small o-ring into the groove of the air orifice. **Do not lubricate the o-ring.**

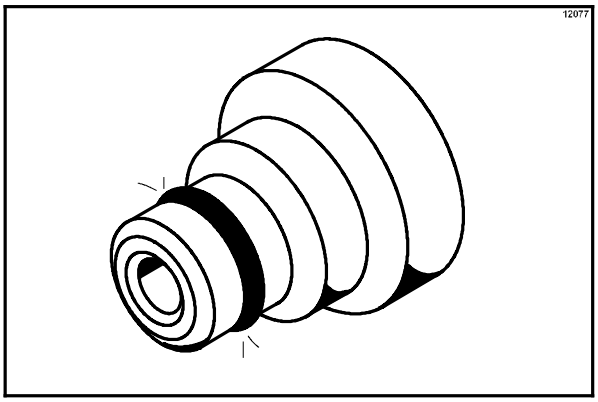

Figure 61

Note: Make sure the hole in the air orifice is clean and is not clogged. If the hole in the air orifice should become clogged, use soap and hot water to clear the hole. **Do not enlarge the hole in the air orifice.**

Step 26
Install the air orifice into the hole in the top of the feed tube (the end of the feed tube without the small hole on the side).

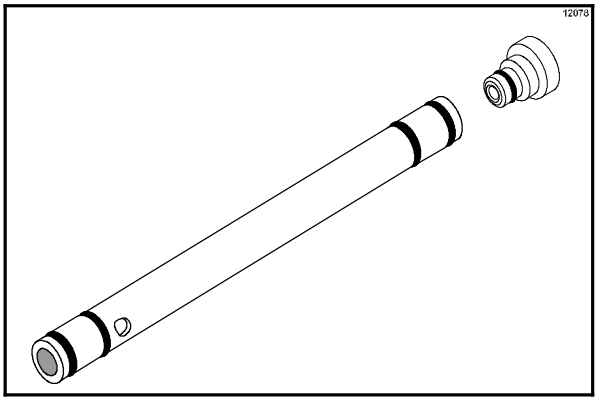

Figure 62

Step 27
Lay the feed tube (with air orifice installed) and the agitator (factory-equipped agitator units, only) in the bottom of the mix hopper for sanitizing.

Step 28
Repeat steps 24 through 27 for the other side of the machine.

Sanitizing

Step 1
Prepare an approved 100 PPM sanitizing solution (examples: 2-1/2 gal. [9.5 liters] of Kay-5® or 2 gal. [7.6 liters] of Stera-Sheen®). USE WARM WATER AND FOLLOW THE MANUFACTURER'S SPECIFICATIONS.

Step 2
Pour the sanitizing solution over all the parts in the bottom of the mix hopper and allow it to flow into the freezing cylinder.

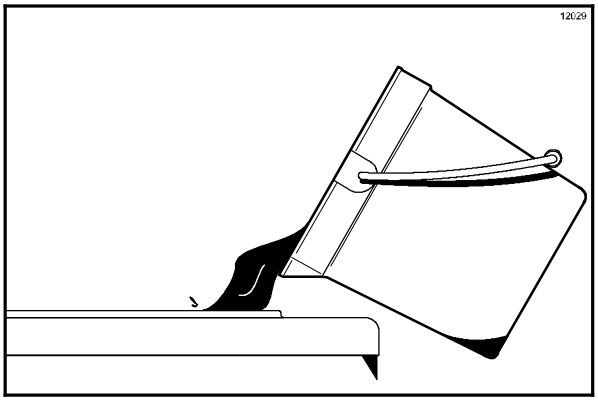

Figure 63

Note: You have just sanitized the mix hopper and parts. Therefore, be sure your hands are clean and sanitized before proceeding to the next step.

Step 3
While the solution is flowing into the freezing cylinder, take particular care to brush-clean the mix level sensing probe on the bottom of the hopper, the mix hopper, the mix inlet hole, the mix feed tube and the agitator (factory-equipped agitator units, only).

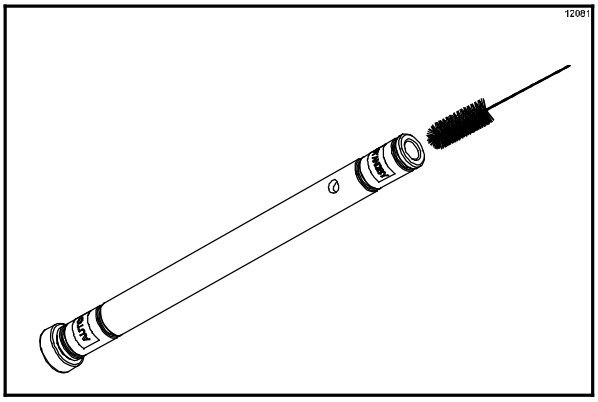

Figure 64

Step 4
Prepare another pail of approved 100 PPM sanitizing solution (examples: 2-1/2 gal. [9.5 liters] of Kay-5® or 2 gal. [7.6 liters] of Stera-Sheen®). USE WARM WATER AND FOLLOW THE MANUFACTURER'S SPECIFICATIONS.

Step 5
Pour the sanitizing solution into the mix hopper.

Step 6
Brush the exposed sides of the hopper.

Step 7
Place the power switch in the ON position.

Step 8
Touch the WASH symbol . This will cause the sanitizing solution in the freezing cylinder to agitate. A five minute countdown timer will display on the control to show when five minutes has elapsed. After the five minutes has elapsed, proceed to the next step.

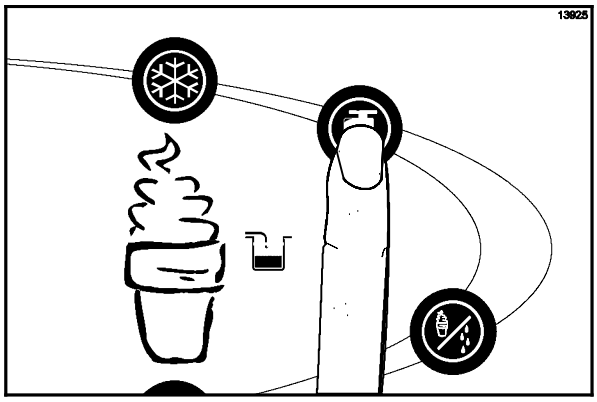

Figure 65

Step 9
With an empty pail beneath the door spouts, raise the prime plug.

Step 10
When a steady stream of sanitizing solution is flowing from the prime plug opening in the bottom of the freezer door, open the draw valve. Momentarily open the center draw valve to sanitize the center door spout. Draw off the remaining sanitizing solution.

Step 11
Once the sanitizer stops flowing from the door spout, touch the WASH symbol and close the draw valve.

Note: Be sure your hands are clean and sanitized before proceeding to the next step.

Step 12
Lubricate the feed tube o-rings on the end with the small hole on the side. Stand the feed tube in the corner of the hopper.

Step 13
Factory equipped agitator units only: Place the agitator on the agitator drive shaft housing.

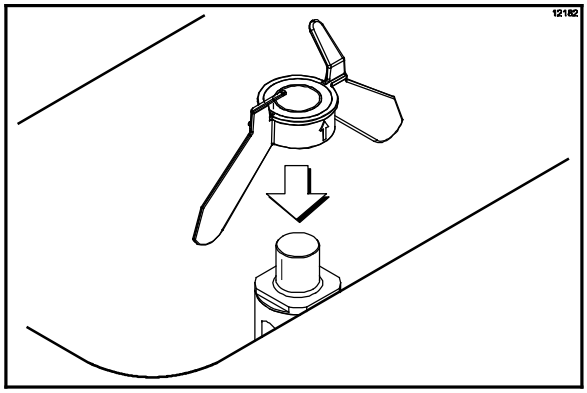

Figure 66

Note: If the agitator should stop turning during normal operation, with **sanitized hands**, remove agitator from agitator drive shaft housing and brush clean with sanitizing solution. Install the agitator back onto the agitator drive shaft housing.

Step 14
Repeat these steps for the other side of the machine.

Priming

Note: Use only FRESH MIX when priming the freezer.

Step 1
Place an empty mix pail beneath the door spouts. With the prime plug in the up position, pour 2-1/2 gallons (9.5 liters) of FRESH mix into the mix hopper and allow it to flow into the freezing cylinder.

Step 2
Open the draw valve to remove the sanitizing solution. When only fresh mix is flowing, close the draw valve.

Step 3
Once a steady stream of mix starts to flow from the prime plug opening in the bottom of the freezer door, push the prime plug down.

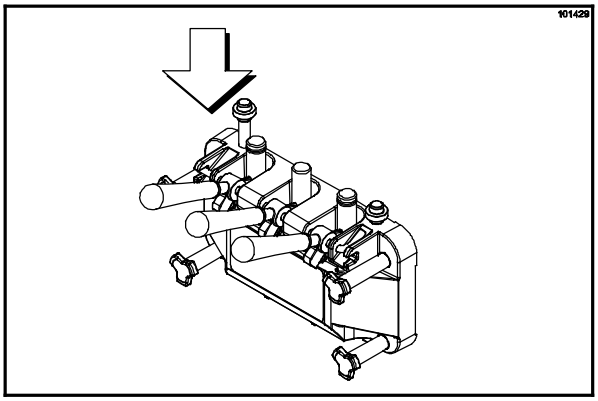

Figure 67

Note: Be sure your hands are clean and sanitized before proceeding to the next step.

Step 4
When mix stops bubbling down into the freezing cylinder, install the end of the feed tube **with the hole in it** into the mix inlet hole in the mix hopper. Make sure the air orifice is installed in the feed tube.

Step 5
Select the AUTO symbol ❄.

Step 6
Fill the hopper with fresh mix and place the mix hopper cover in position.

Step 7
Repeat these steps for the other side of the machine.

Manual Brush Cleaning

THESE PROCEDURES MUST BE PERFORMED DAILY!

ALWAYS FOLLOW LOCAL HEALTH CODES.

To disassemble the Model C723, the following items will be needed:

- Two cleaning and sanitizing pails
- Sanitizer/Cleaner
- Necessary brushes (provided with freezer)
- Single service towels

Draining Product From The Freezing Cylinder

Step 1
Remove the hopper cover, feed tube, and agitator (factory-equipped agitator units, only). Take them to the sink for cleaning.

Step 2
With a pail beneath the door spouts, touch the WASH symbol and open the draw valve.

Step 3
If local health codes permit the use of rerun, place a sanitized, NSF approved stainless steel rerun container beneath the door spout. Press the WASH key and open the draw valve. Drain the remaining product from the freezing cylinder and mix hopper. When the flow of product stops, press the WASH key and close the draw valve. Place the sanitized lid on the rerun container and place it in the walk-in cooler.

IMPORTANT! The bacteria cycle must be broken every seven days. On a designated day of the week, run the mix as low as feasible and discard it after closing. This will break the rerun cycle and reduce the possibility of high bacteria and coliform counts.

Note: If local health codes DO NOT permit the use of rerun, the product must be discarded. Follow the instructions in the previous step, with one exception. Drain the product into a mix pail and properly discard the mix.

ALWAYS FOLLOW LOCAL HEALTH CODES.

130108

Step 4
Repeat these steps for the other side of the machine.

Rinsing

Step 1
Pour two gallons (7.6 liters) of cool, clean water into the mix hopper. With the white hopper brush, scrub the mix hopper, the mix level sensing probe, and the outside of the agitator drive shaft housing (factory-equipped agitator units, only). Using the double-ended brush, brush clean the mix inlet hole.

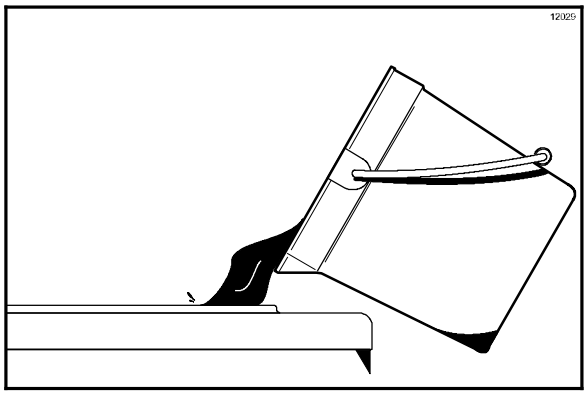

Figure 68

Note: Do not brush clean the mix inlet hole while the machine is in the WASH mode.

Step 2
With a mix pail beneath the door spout, raise the prime plug and touch the WASH symbol .

Step 3
When a steady stream of rinse water is flowing from the prime plug opening in the bottom of the freezer door, open the draw valve. Drain all the water from the door spout. Close the draw valve, and touch the WASH symbol, cancelling the Wash mode.

Step 4
Repeat this procedure using clean, warm water until the water being discharged is clear.

Step 5
Repeat these steps for the other side of the machine.

Hopper Cleaning

Note: Failure to follow these steps will result in milk-stone build-up.

Step 1
Prepare an approved 100 PPM cleaning solution (examples: 2-1/2 gal. [9.5 liters] of Kay-5® or 2 gal. [7.6 liters] of Stera-Sheen®). USE WARM WATER AND FOLLOW THE MANUFACTURER'S SPECIFICATIONS.

Step 2
Push the prime plug down. Pour the cleaning solution into the hopper and allow it to flow into the freezing cylinder.

Step 3
With the white hopper brush, scrub the mix hopper, the mix level sensing probe, and the outside of the agitator drive shaft housing (factory-equipped agitator units, only). Using the double-ended brush, brush clean the mix inlet hole.

Note: Do not brush clean the mix inlet hole while the machine is in the WASH mode.

Step 4
Touch the WASH symbol . This will cause the cleaning solution in the freezing cylinder to come in contact with all areas of the freezing cylinder.

Step 5
Place an empty pail beneath the door spouts and raise the prime plug.

Step 6
When a steady stream of cleaning solution is flowing from the prime plug opening in the bottom of the freezer door, open the draw valve. Draw off all the solution.

Step 7
Once the cleaning solution stops flowing from the door spout, close the draw valve and touch the WASH symbol , cancelling the Wash mode.

Step 8
Repeat these steps on the other side of the machine.

Disassembly

MAKE SURE THE POWER SWITCH IS IN THE "OFF" POSITION! Failure to follow this instruction may result in severe personal injury from hazardous moving parts.

Step 1
From the freezing cylinder, remove the handscrews, freezer door, the beater and scraper blades, and the drive shaft.

Step 2
Remove the scraper blades from the beater assembly.

Step 3
Remove the drive shaft seal from the drive shaft.

Step 4
Remove the freezer door gasket, front bearing, pivot pin, draw handle, draw valve, prime plugs and design caps. Remove the three o-rings from the draw valve.

Step 5
Repeat these steps on the other side of the machine.

Step 6
Remove the front drip tray, splash shield, and drip pan. Take them to the sink for cleaning.

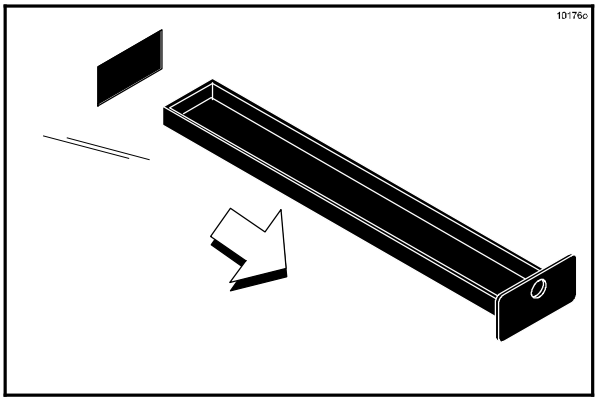

Figure 69

Note: If the drip pan is filled with an excessive amount of mix, it is an indication that the drive shaft seal(s), or o-ring(s) should be replaced or properly lubricated.

Brush Cleaning

Step 1
Prepare an approved 100 PPM cleaning solution (examples: 2-1/2 gal. [9.5 liters] of Kay-5® or 2 gal. [7.6 liters] of Stera-Sheen®). USE WARM WATER AND FOLLOW THE MANUFACTURER'S SPECIFICATIONS. Make sure all brushes provided with the freezer are available for brush cleaning.

Step 2
Thoroughly brush clean all disassembled parts in the cleaning solution, making sure all lubricant and mix film is removed. Be sure to brush all surfaces and holes, especially the holes in the freezer door.

Step 3
Rinse all parts with clean, warm water. Place the parts on a clean, dry surface to air dry overnight.

Step 4
Return to the freezer with a small amount of cleaning solution. Using the black brush, clean the rear shell bearing at the back of the freezing cylinder.

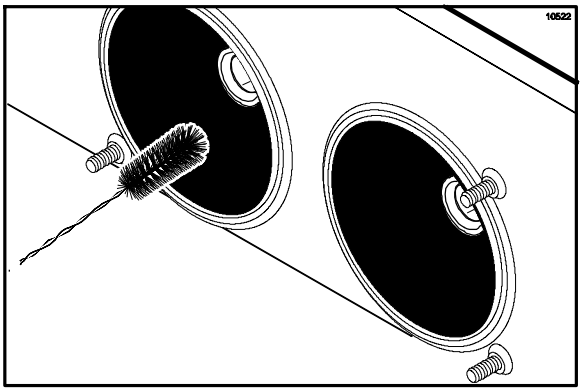

Figure 70

Step 5
Repeat these steps on the other side of the machine.

Step 6
Wipe all exterior surfaces of the freezer with a clean, sanitized towel.

Section 7 Important: Operator Checklist

During Cleaning and Sanitizing

ALWAYS FOLLOW LOCAL HEALTH CODES.

Cleaning and sanitizing schedules are governed by federal, state, or local regulatory agencies, and must be followed accordingly. If the unit has a "Standby mode", it must not be used in lieu of proper cleaning and sanitizing procedures and frequencies set forth by the ruling health authority. The following check points should be stressed during the cleaning and sanitizing operations.

CLEANING AND SANITIZING MUST BE PERFORMED DAILY.

Troubleshooting Bacterial Count

☐ 1. Thoroughly clean and sanitize the machine regularly, including complete disassembly and brush cleaning.

☐ 2. Use all brushes supplied for thorough cleaning. The brushes are specially designed to reach all mix passageways.

☐ 3. Use the white bristle brush to clean the mix inlet hole which extends from the mix hopper down to the rear of the freezing cylinder.

☐ 4. Use the black bristle brush to thoroughly clean the rear shell bearing located at the rear of the freezing cylinder. Be sure there is a generous amount of cleaning solution on the brush.

☐ 5. IF LOCAL HEALTH CODES PERMIT THE USE OF RERUN, make sure the mix rerun is stored in a sanitized, covered stainless steel container and used the following day. **DO NOT prime the machine with rerun.** When using rerun, skim off the foam and discard. Mix the rerun with fresh mix in a ratio of 50/50 during the days operation.

☐ 6. The bacteria cycle must be broken every seven days. On a designated day of the week, run the mix as low as feasible and discard it after closing. This will break the rerun cycle and reduce the possibility of high bacteria and coliform counts.

☐ 7. Properly prepare the cleaning and sanitizing solutions. Read and follow the label directions carefully. Too strong of a solution may damage the parts and too weak of a solution will not do an adequate job of cleaning or sanitizing.

☐ 8. The temperature of the mix in the mix hopper and walk-in cooler should be below 40°F (4.4°C).

Regular Maintenance Checks

☐ 1. Replace scraper blades that are nicked or damaged. Before installing the beater assembly, be certain that scraper blades are properly attached to the helix.

☐ 2. Check the rear shell bearing for signs of wear (excessive mix leakage in rear drip pan) and be certain it is properly cleaned.

☐ 3. Using a screwdriver and cloth towel, keep the rear shell bearing and the female hex drive socket clean and free of lubricant and mix deposits.

☐ 4. Dispose of o-rings and seals if they are worn, torn, or fit too loosely, and replace with new ones.

☐ 5. Follow all lubricating procedures as outlined in “Assembly”.

☐ 6. If your machine is air cooled, check the condensers for an accumulation of dirt and lint. Dirty condensers will reduce the efficiency and capacity of the machine. Condensers should be cleaned **monthly** with a soft brush. **Never** use screwdrivers or other metal probes to clean between the fins.
Note: For machines equipped with an air filter, it will be necessary to vacuum the filters on a monthly schedule.

Caution: Always disconnect electrical power prior to cleaning the condenser. Failure to follow this instruction may result in electrocution.

☐ 7. If your machine is water cooled, check the water lines for kinks or leaks. Kinks can occur when the machine is moved back and forth for cleaning or maintenance purposes. Deteriorated or cracked water lines should only be replaced by an authorized Taylor technician.

Winter Storage

If the place of business is to be closed during the winter months, it is important to protect the freezer by following certain precautions, particularly if the building is subject to freezing conditions.

Disconnect the freezer from the main power source to prevent possible electrical damage.

On water cooled freezers, disconnect the water supply. Relieve pressure on the spring in the water valve. Use air pressure on the outlet side to blow out any water remaining in the condenser. **This is extremely important.** Failure to follow this procedure may cause severe and costly damage to the refrigeration system.

Your local Taylor Distributor can perform this winter storage service for you.

Wrap detachable parts of the freezer such as the beater, blades, drive shaft, and freezer door, and place them in a protected dry place. Rubber trim parts and gaskets can be protected by wrapping them with moisture-proof paper. All parts should be thoroughly cleaned of dried mix or lubrication, which attract mice and other vermin.

It is recommended that an authorized service technician perform winter storage draining to insure all water has been removed. This will guard against freezing and rupturing of the components.

Section 8 Troubleshooting Guide

PROBLEM	PROBABLE CAUSE	REMEDY	PAGE REF.
1. No product is being dispensed.	a. Low on mix. The MIX OUT light is on.	a. Add mix to the mix hopper. Return to AUTO mode.	34
	b. The power switch is in the OFF position.	b. Place the power switch to ON and select AUTO.	33
	c. Machine not in AUTO mode.	c. Select AUTO and allow machine to cycle off before drawing product.	34
	d. Beater motor is out on reset. The BEATER OVERLOAD message displayed.	d. Turn the machine off. Press the reset button. Restart the machine in AUTO.	- - -
	e. Freeze-up in mix inlet hole.	e. Call an authorized service technician.	- - -
	f. Feed tube is not properly installed.	f. Make sure feed tube is properly installed.	34
2. The product is too soft.	a. Draw rate is set too fast.	a. Adjust draw rate of 5 to 7 1/2 oz. (142 g. to 213 g.) of product by weight in 10 seconds.	31
3. The product is too thick.	a. Freezing cylinder not primed correctly.	a. Drain the freezing cylinder and reprime the machine.	34
	b. The viscosity control is set too cold.	b. Call an authorized service technician.	- - -
	c. Freeze-up in mix inlet hole.	c. Call an authorized service technician.	- - -

PROBLEM	PROBABLE CAUSE	REMEDY	PAGE REF.
4. The mix in the hopper is too warm.	a. Hopper cover is not in position.	a. Clean and sanitize hopper cover and place in position.	34
	b. The hopper temperature is out of adjustment.	b. Call an authorized service technician.	- - -
	c. Agitator is not installed (factory-equipped agitator units, only).	c. Clean and sanitize the agitator and install.	33
5. The mix in the hopper is too cold.	a. The hopper temperature is out of adjustment.	a. Call an authorized service technician.	- - -
6. Mix Low and Mix Out probes are not functioning.	a. Milkstone build-up in the hopper.	a. Clean hoppers thoroughly.	36
7. Product is collecting on top of the freezer door.	a. The top o-ring on draw valve is improperly lubricated or is worn.	a. Lubricate properly or replace the o-ring.	30
8. Excessive mix leakage from the bottom of door spout.	a. Bottom o-ring on draw valve is improperly lubricated is or worn.	a. Lubricate properly or replace the o-ring.	30
9. Excessive mix leakage into the drip pan.	a. The seal on drive shaft is improperly lubricated or worn.	a. Lubricate properly or replace the seal.	27
	b. The seal is installed inside-out on the drive shaft.	b. Install correctly.	27
	c. Inadequate lubrication of the drive shaft.	c. Lubricate properly.	27
	d. The drive shaft and beater assembly work forward.	d. Call an authorized service technician.	- - -
	e. Worn rear shell bearing.	e. Call an authorized service technician.	- - -
	f. Gear box out of alignment.	f. Call an authorized service technician.	- - -

PROBLEM	PROBABLE CAUSE	REMEDY	PAGE REF.
10. The drive shaft is stuck in the drive coupling.	a. Mix and lubricant collected in drive coupling.	a. Brush clean the rear shell bearing area regularly.	36
	b. Rounded corners of drive shaft, drive coupling, or both.	b. Call an authorized service technician.	- - -
	c. Gear box is out of alignment.	c. Call an authorized service technician.	- - -
11. The freezing cylinder walls are scored.	a. Missing or worn front bearing.	a. Install or replace the front bearing.	28
	b. Broken freezer door baffle rod.	b. Replace freezer door.	29
	c. Beater assembly is bent.	c. Replace beater assembly.	29
	d. Gear box is out of alignment.	d. Call an authorized service technician.	- - -
12. The product makes a popping sound when drawn.	a. Draw rate is set too fast.	a. Adjust draw rate of 5 to 7 1/2 oz. (142 g. to 213 g.) of product by weight in 10 seconds.	31
	b. Freezing cylinder not primed correctly.	b. Drain the freezing cylinder and reprime the machine.	34
13. No control panel functions with power switch ON.	a. Machine is unplugged.	a. Plug into wall receptacle.	- - -
	b. Circuit breaker OFF or blown fuse.	b. Turn the breaker ON or replace the fuse.	- - -

Section 9 Parts Replacement Schedule

PART DESCRIPTION	EVERY 3 MONTHS	EVERY 6 MONTHS	ANNUALLY
Scraper Blade	X		
Drive Shaft Seal	X		
Freezer Door Gasket	X		
Front Bearing	X		
Draw Valve O-Ring	X		
Draw Valve Seal	X		
Prime Plug O-Ring	X		
Mix Feed Tube O-Ring	X		
Design Cap	X		
White Bristle Brush, 3” x 7”		Inspect & Replace if Necessary	Minimum
White Bristle Brush, 1” x 2”		Inspect & Replace if Necessary	Minimum
Black Bristle Brush, 1” x 2”		Inspect & Replace if Necessary	Minimum
Double-Ended Brush		Inspect & Replace if Necessary	Minimum

Section 10 Limited Warranty on Equipment

TAYLOR COMPANY LIMITED WARRANTY ON FREEZERS

Taylor Company, a division of Carrier Commercial Refrigeration, Inc. (“Taylor”) is pleased to provide this limited warranty on new Taylor-branded freezer equipment available from Taylor to the market generally (the “Product”) to the original purchaser only.

LIMITED WARRANTY

Taylor warrants the Product against failure due to defect in materials or workmanship under normal use and service as follows. All warranty periods begin on the date of original Product installation. If a part fails due to defect during the applicable warranty period, Taylor, through an authorized Taylor distributor or service agency, will provide a new or re-manufactured part, at Taylor’s option, to replace the failed defective part at no charge for the part. Except as otherwise stated herein, these are Taylor’s exclusive obligations under this limited warranty for a Product failure. This limited warranty is subject to all provisions, conditions, limitations and exclusions listed below and on the reverse (if any) of this document.

Product	Part	Limited Warranty Period
Soft Serve	Insulated shell assembly	Five (5) years
Frozen Yogurt **Shakes**	Refrigeration compressor (except service valve)	Five (5) years
Smoothies	Beater motors	Two (2) years
Frozen Beverage	Beater drive gear	Two (2) years
Batch Desserts	Printed circuit boards and Softech controls beginning with serial number H8024200	Two (2) years
	Parts not otherwise listed in this table or excluded below	One (1) year

LIMITED WARRANTY CONDITIONS

1. If the date of original installation of the Product cannot be verified, then the limited warranty period begins ninety (90) days from the date of Product manufacture (as indicated by the Product serial number). Proof of purchase may be required at time of service.
2. This limited warranty is valid only if the Product is installed and all required service work on the Product is performed by an authorized Taylor distributor or service agency, and only if genuine, new Taylor parts are used.
3. Installation, use, care, and maintenance must be normal and in accordance with all instructions contained in the Taylor Operator’s Manual.
4. Defective parts must be returned to the authorized Taylor distributor or service agency for credit.
5. The use of any refrigerant other than that specified on the Product’s data label will void this limited warranty.

LIMITED WARRANTY EXCEPTIONS

This limited warranty does **not** cover:

1. Labor or other costs incurred for diagnosing, repairing, removing, installing, shipping, servicing or handling of defective parts, replacement parts, or new Products.
2. Normal maintenance, cleaning and lubrication as outlined in the Taylor Operator’s Manual, including cleaning of condensers.

3. Replacement of wear items designated as Class “000” parts in the Taylor Operator’s Manual.
4. External hoses, electrical power supplies, and machine grounding.
5. Parts not supplied or designated by Taylor, or damages resulting from their use.
6. Return trips or waiting time required because a service technician is prevented from beginning warranty service work promptly upon arrival.
7. Failure, damage or repairs due to faulty installation, misapplication, abuse, no or improper servicing, unauthorized alteration or improper operation or use as indicated in the Taylor Operator’s Manual, including but not limited to the failure to use proper assembly and cleaning techniques, tools, or approved cleaning supplies.
8. Failure, damage or repairs due to theft, vandalism, wind, rain, flood, high water, water, lightning, earthquake or any other natural disaster, fire, corrosive environments, insect or rodent infestation, or other casualty, accident or condition beyond the reasonable control of Taylor; operation above or below the electrical or water supply specification of the Product; or components repaired or altered in any way so as, in the judgment of the Manufacturer, to adversely affect performance, or normal wear or deterioration.
9. Any Product purchased over the Internet.
10. Failure to start due to voltage conditions, blown fuses, open circuit breakers, or damages due to the inadequacy or interruption of electrical service.
11. Electricity or fuel costs, or increases in electricity or fuel costs from any reason whatsoever.
12. Damages resulting from the use of any refrigerant other than that specified on the Product’s data label will void this limited warranty.
13. Any cost to replace, refill or dispose of refrigerant, including the cost of refrigerant.
14. **ANY SPECIAL, INDIRECT OR CONSEQUENTIAL PROPERTY OR COMMERCIAL DAMAGE OF ANY NATURE WHATSOEVER.** Some jurisdictions do not allow the exclusion of incidental or consequential damages, so this limitation may not apply to you.

This limited warranty gives you specific legal rights, and you may also have other rights which vary from jurisdiction to jurisdiction.

LIMITATION OF WARRANTY

THIS LIMITED WARRANTY IS EXCLUSIVE AND IS IN LIEU OF ALL OTHER WARRANTIES, CONDITIONS AND/OR REMEDIES UNDER THE LAW, INCLUDING ANY IMPLIED WARRANTIES OR CONDITIONS OF MERCHANTABILITY OR FITNESS FOR A PARTICULAR PURPOSE. THE ORIGINAL OWNER'S SOLE REMEDY WITH RESPECT TO ANY PRODUCTS SHALL BE REPAIR OR REPLACEMENT OF DEFECTIVE COMPONENTS UNDER THE TERMS OF THIS LIMITED WARRANTY. ALL RIGHTS TO CONSEQUENTIAL OR INCIDENTAL DAMAGES (INCLUDING CLAIMS FOR LOST SALES, LOST PROFITS, PRODUCT LOSS, PROPERTY DAMAGES OR SERVICE EXPENSES) ARE EXPRESSLY EXCLUDED. THE EXPRESS WARRANTIES MADE IN THIS LIMITED WARRANTY MAY NOT BE ALTERED, ENLARGED, OR CHANGED BY ANY DISTRIBUTOR, DEALER, OR OTHER PERSON, WHATSOEVER.

LEGAL REMEDIES

The owner **must** notify Taylor in writing, by certified or registered letter to the following address, of any defect or complaint with the Product, stating the defect or complaint and a specific request for repair, replacement, or other correction of the Product under warranty, mailed at least thirty (30) days before pursuing any legal rights or remedies.

Taylor Company
a division of Carrier Commercial Refrigeration, Inc.
750 N. Blackhawk Blvd.
Rockton, IL 61072

131121

Section 11 Limited Warranty on Parts

TAYLOR COMPANY LIMITED WARRANTY ON TAYLOR GENUINE PARTS

Taylor Company, a division of Carrier Commercial Refrigeration, Inc. (“Taylor”) is pleased to provide this limited warranty on new Taylor genuine replacement components and parts available from Taylor to the market generally (the “Parts”) to the original purchaser only.

LIMITED WARRANTY

Taylor warrants the Parts against failure due to defect in materials or workmanship under normal use and service as follows. All warranty periods begin on the date of original installation of the Part in the Taylor unit. If a Part fails due to defect during the applicable warranty period, Taylor, through an authorized Taylor distributor or service agency, will provide a new or re-manufactured Part, at Taylor’s option, to replace the failed defective Part at no charge for the Part. Except as otherwise stated herein, these are Taylor’s exclusive obligations under this limited warranty for a Part failure. This limited warranty is subject to all provisions, conditions, limitations and exclusions listed below and on the reverse (if any) of this document.

Part's Warranty Class Code or Part	Limited Warranty Period
Class 103 Parts[1]	Three (3) months
Class 212 Parts[2]	Twelve (12) months
Class 512 Parts	Twelve (12) months
Class 000 Parts	No warranty
Taylor Part #072454 (Motor-24VDC *C832/C842*)	Four (4) years

LIMITED WARRANTY CONDITIONS

1. If the date of original installation of the Part cannot be otherwise verified, proof of purchase may be required at time of service.
2. This limited warranty is valid only if the Part is installed and all required service work in connection with the Part is performed by an authorized Taylor distributor or service agency.
3. The limited warranty applies only to Parts remaining in use by their original owner at their original installation location in the unit of original installation.
4. Installation, use, care, and maintenance must be normal and in accordance with all instructions contained in the Taylor Operator’s Manual.
5. Defective Parts must be returned to the authorized Taylor distributor or service agency for credit.
6. This warranty is not intended to shorten the length of any warranty coverage provided pursuant to a separate Taylor Limited Warranty on freezer or grill equipment.
7. The use of any refrigerant other than that specified for the unit in which the Part is installed will void this limited warranty.

[1, 2] Except that Taylor Part #032129SER2 (Compressor-Air-230V SERV) and Taylor Part #075506SER1 (Compressor-Air-115V 60HZ) shall have a limited warranty period of twelve (12) months when used in Taylor freezer equipment and a limited warranty period of two (2) years when used in Taylor grill equipment.

LIMITED WARRANTY EXCEPTIONS

This limited warranty does **not** cover:

1. Labor or other costs incurred for diagnosing, repairing, removing, installing, shipping, servicing or handling of defective Parts, replacement Parts, or new Parts.
2. Normal maintenance, cleaning and lubrication as outlined in the Taylor Operator's Manual, including cleaning of condensers or carbon and grease buildup.
3. Required service, whether cleaning or general repairs, to return the cooking surface assemblies, including the upper platen and lower plate, to an operational condition to achieve proper cooking or allow proper assembly of release sheets and clips as a result of grease build-up on the cooking surfaces, including but not limited to the platen and plate, sides of the shroud or top of the shroud.
4. Replacement of cooking surfaces, including the upper platen and lower plate, due to pitting or corrosion (or in the case of the upper platen, due to loss of plating) as a result of damage due to the impact of spatulas or other small wares used during the cooking process or as a result of the use of cleaners, cleaning materials or cleaning processes not approved for use by Taylor.
5. Replacement of wear items designated as Class "000" Parts in the Taylor Operator's Manual, as well as any release sheets and clips for the Product's upper platen assembly.
6. External hoses, electrical power supplies, and machine grounding.
7. Parts not supplied or designated by Taylor, or damages resulting from their use.
8. Return trips or waiting time required because a service technician is prevented from beginning warranty service work promptly upon arrival.
9. Failure, damage or repairs due to faulty installation, misapplication, abuse, no or improper servicing, unauthorized alteration or improper operation or use as indicated in the Taylor Operator's Manual, including but not limited to the failure to use proper assembly and cleaning techniques, tools, or approved cleaning supplies.
10. Failure, damage or repairs due to theft, vandalism, wind, rain, flood, high water, water, lightning, earthquake or any other natural disaster, fire, corrosive environments, insect or rodent infestation, or other casualty, accident or condition beyond the reasonable control of Taylor; operation above or below the gas, electrical or water supply specification of the unit in which a part is installed; or Parts or the units in which they are installed repaired or altered in any way so as, in the judgment of Taylor, to adversely affect performance, or normal wear or deterioration.
11. Any Part purchased over the Internet.
12. Failure to start due to voltage conditions, blown fuses, open circuit breakers, or damages due to the inadequacy or interruption of electrical service.
13. Electricity, gas or other fuel costs, or increases in electricity or fuel costs from any reason whatsoever.
14. Damages resulting from the use of any refrigerant other than that specified for the unit in which the Part is installed will void this limited warranty.
15. Any cost to replace, refill or dispose of refrigerant, including the cost of refrigerant.
16. **ANY SPECIAL, INDIRECT OR CONSEQUENTIAL PROPERTY OR COMMERCIAL DAMAGE OF ANY NATURE WHATSOEVER.** Some jurisdictions do not allow the exclusion of incidental or consequential damages, so this limitation may not apply to you.

This limited warranty gives you specific legal rights, and you may also have other rights which vary from jurisdiction to jurisdiction.

131121

LIMITATION OF WARRANTY

THIS LIMITED WARRANTY IS EXCLUSIVE AND IS IN LIEU OF ALL OTHER WARRANTIES, CONDITIONS AND/OR REMEDIES UNDER THE LAW, INCLUDING ANY IMPLIED WARRANTIES OR CONDITIONS OF MERCHANTABILITY OR FITNESS FOR A PARTICULAR PURPOSE. THE ORIGINAL OWNER'S SOLE REMEDY WITH RESPECT TO ANY PRODUCTS SHALL BE REPAIR OR REPLACEMENT OF DEFECTIVE PARTS UNDER THE TERMS OF THIS LIMITED WARRANTY. ALL RIGHTS TO CONSEQUENTIAL OR INCIDENTAL DAMAGES (INCLUDING CLAIMS FOR LOST SALES, LOST PROFITS, PRODUCT LOSS, PROPERTY DAMAGES OR SERVICE EXPENSES) ARE EXPRESSLY EXCLUDED. THE EXPRESS WARRANTIES MADE IN THIS LIMITED WARRANTY MAY NOT BE ALTERED, ENLARGED, OR CHANGED BY ANY DISTRIBUTOR, DEALER, OR OTHER PERSON, WHATSOEVER.

LEGAL REMEDIES

The owner **must** notify Taylor in writing, by certified or registered letter to the following address, of any defect or complaint with the Part, stating the defect or complaint and a specific request for repair, replacement, or other correction of the Part under warranty, mailed at least thirty (30) days before pursuing any legal rights or remedies.

Taylor Company
a division of Carrier Commercial Refrigeration, Inc.
750 N. Blackhawk Blvd.
Rockton, IL 61072

DESCRIPTION	PART NUMBER	QTY.	WARR. CLASS	REMARKS
C72327FW00 & C72333FW00 **208-230V 60HZ 1PH & 208-230V 60-HZ 3 PH A/C-BRISTOL (R404A) - ROHS COMPLIANT**				
ACCUMULATOR-COPPER 2"DIA 10"LG	047062	1	103	
ACTUATOR A.-DRAW SWITCH	X69835	1	103	S/N M1116244 & UP REPLACES X62401
ARM-DRAW SWITCH-LEFT	069166	1	103	
ARM-DRAW SWITCH-RIGHT	069167	1	103	
BRACKET A.-SPRING-RETURN	X69481	1	103	
BRACKET A.-SWITCH *C71X*	X69836	1	103	
E-RING 1/4 BLACK PHOS	032190	3	000	
PIN-PIVOT-DRAW SWITCH	038484	1	103	
ROD-SPRING RETAINER	038254-SP	1	103	
SCREW-ADJUSTMENT-DRAW PADDLE	069374	2	000	
SPRING-EXTENSION.467X.062X1.	069392	2	103	
SPRING-RETURN-LEFT-TWIN TWIST	038923	1	103	
SPRING-RETURN-RIGHT-TWIN TWIST	038924	1	103	
ACTUATOR A.-DRAW SWITCH	X62401	1	103	S/N M1116243 & PRIOR
ARM-SWITCH-DRAW-L	038649	1	103	
ARM-SWITCH-DRAW-R	038650	1	103	
PIN-PIVOT-DRAW SWITCH	038484	1	103	
ROD-SPRING RETAINER	038254	1	103	
E-RING 1/4 BLACK PHOS	032190	3	000	
SPRING-EXTENSION.500X.054X1.00	067352	2	103	
SPRING-RETURN-LEFT-TWIN TWIST	038923	1	103	
SPRING-RETURN-RIGHT-TWIN TWIST	038924	1	103	
BEARING FRONT	050216	2	000	
BEARING-REAR SHELL-NICKEL	031324	2	000	
+GUIDE-DRIP SEAL	028992	2	000	
+NUT-BEARING	028991	2	000	
+WASHER-BEARING LOCK	012864	2	000	
BEATER A.-2.8QT-HELICORE	X35466	2	103	
+BLADE-SCRAPER-PLASTIC 13-1/4L	035480	4	000	

DESCRIPTION	PART NUMBER	QTY.	WARR. CLASS	REMARKS
BELT-AX37 RIGHT	023447	2	000	RIGHT M3044471 - PRIOR USED 4 - 022848
BELT-AX35 LEFT	022848	2	000	LEFT M3044471 USE 2-022848 AND 2-023447
BLOCK-TERMINAL 2P L1,L2	039422	1	103	208-230V 60HZ 1PH - SPLICE BOX
BLOCK-TERMINAL 3P L1,L2,L3	039423	1	103	208-230V 60HZ 3PH
BRUSH-REAR BRG 1"D X 2"LG X 14	013071	1	000	
BRUSH-DBL END-PUMP & FEED TUBE	013072	1	000	
BRUSH-DRAW VALVE 1"OD X 2"X17"	013073	1	000	
BRUSH-MIX PUMP BODY-3" X 7" WH	023316	1	000	
BUSHING-SNAP 11/16 ID X 7/8OD	010548	1	103	
BUSHING-SNAP 1-5/8ID X 2 OD	043637	4	103	
BUSHING-SPLIT 43/64ID X 7/8OD	027691	1	103	MAIN COMP
BUSHING-SNAP 15/16 ID X 1-3/32	023396	1	103	
CABLE-CONTROL/INTERFACE *	069023	1	103	S/N M1063856 & UP - REPLACED 069024
CABLE-RIBBON-14C-3"L-SIL/SIL	056864	1	103	DEC PLATE
CABLE-RIBBON-50C-20"L-DIL/DIL	040040-011	1	103	
CABLE-RIBBON-20C-17"L-DIL/DILR	040040-013	1	103	
CABLE-RIBBON-50C-25"L.DIL/DIL	040040-025	1	103	
CABLE-RIBBON-20C-14"L-DIL/DIL	040040-040	1	103	
CABLE-RIBBON-20C-16"L-DIL/DIL	040040-049	1	103	
CABLE-USB	056785	1	103	S/N M1063855 & PRIOR TO UVC4
CABLE-CONTROL/INTERFACE A	069024	1		S/N M1063855 & PRIOR TO UVC4
CAP-DESIGN 1.010"ID-6 POINT	014218	3	000	
COMPRESSOR TL3G-R134A	047701-27	1	512	**SEE KIT X48314-27
+CAPACITOR-START 60UF-220/275V	047703	1	103	
+RELAY-START-COMPRESSOR-TL3G	047702-27	1	103	
COMPRESSOR L64A113BBCA	048259-27E	1	512	208-230V 60HZ 1PH
+CAPACITOR-RUN 25UF/440V	037431	1	103	
+CAPACITOR-START 189-227UF/330V	033044-1	1	103	
+RELAY-START-COMPRESSOR	062363	1	103	
+SCREW-5/16-18X1-1/2 HEX HEAD	001894	4	000	
+SLEEVE-MOUNTING-COMP.	039924	4	000	
+GROMMET-COMPRESSOR MOUNTING	037428	4	000	

DESCRIPTION	PART NUMBER	QTY.	WARR. CLASS	REMARKS
COMPRESSOR L63A113DBLA	048259-33	1	512	208-230V 60HZ 3PH
+SCREW-5/16-18X1-1/2 HEX HEAD	001894	4	000	
+SLEEVE-MOUNTING-COMP.	039924	4	000	
+GROMMET-COMPRESSOR MOUNTING	037428	4	000	
CONDENSER-AC 16X16 3ROW 14FPI	056944	1	103	FAN MOTOR
CONDENSER-AC 7X6X1.25-2 ROW	027155	1	103	
COUPLING-DRIVE 3/4 HEX X 1-7/8	012721	2	103	
COVER-CAP&RELAY *C723*	068850	1	103	208-230V 60HZ 1PH
COVER-HOPPER-14 QT-BLACK	041682-BLA	2	103	
DECAL-DOOR-3 SPOUT-TWIN TWIST	062239	1	000	
DECAL-INST-CLN HPR	019029	1	000	
DECAL-TROUBLESHOOT	038374	1	000	
DIAGRAM-WIRING *C723*	068807-27	1	000	208-230V 60HZ 1PH
DIAGRAM-WIRING *C723*	068807-33	1	000	208-230V 60HZ 3PH
DOOR A.-*SH BAF*W/PRG *C723*	X68889-SER	1	103	
BAFFLE A.-SHORT 4 IN W/RAD THD	X50883	2	103	
+FRONT BEARING	050216	2	000	
+GASKET-DOOR HT 4"-DOUBLE	048926	2	000	
+HANDLE A.-DRAW *C602*C606*	X56421-1	3	103	
+O-RING-1/4 OD X .070W 50 DURO	015872	3	000	
+SCREW-ADJUSTMENT-5/16-24 *602*	056332	3	103	
+PIN-HANDLE-TWIN *C712/C717*	059894	1	103	
+PLUG-PRIME TWIN *C712/C713*	059936	2	103	
+O-RING-1/2OD X .070W	024278	4	000	
+VALVE A.-DRAW *C712/C713*	X69615	2	103	S/N M1123969 & UP - REPLACES X59843 & 014402
+O-RING-13/16 OD X .103W	019330	4	000	
+VALVE A.-DRAW-CENTER	X62218	1	103	
+SEAL-DRAW VALVE *LARGE H-RING*	034698	1	000	
+O-RING-13/16 OD X .103W	019330	2	000	S/N M1123969 & UP - REPLACES 014402
DRYER-CAP. TUBE .026ID X 13F	047699	1	000	
DRYER-FILTER-HP62-3/8 X 1/4S	048901	1	000	
EYELET-RESET BUTTON	013739	2	103	

DESCRIPTION	PART NUMBER	QTY.	WARR. CLASS	REMARKS
FASTENER-CLIP 1/4-20 U-TYPE	045865	14	000	
FASTENER-DOOR LATCH	030787	2	000	LOWER PANEL
FASTENER-DOOR STRIKE	030788	2	000	LOWER PANEL
FILTER-AIR-21.688X15.813HX.70W	052779-9	1	000	
FILTER-CORCOM 6EH1	040140-001	1	103	UPPER CONTROL
FUSE-BUSS-ABC-15-R ROHS COMP	076414	2	000	S/N M2035082 & UP REPLACES 045293/045606
+FUSE A.-HOLDER-INLINE	X69221	2	000	S/N M2035082 & UP
FORM-QUALITY REPORT BY FAX	065712	1	000	
GASKET-BASE PAN *C723*	068776	1	000	
+SCREW-10X7/16 UNSL TD HWH	066234	12	000	PAN GASKET
GASKET-DOOR HT 4"-DOUBLE	048926	2	000	
GEAR A.*REDUCER 4.21:1 SERVICE	021286-SER	2	212	
+SCREW-5/16-18X3-1/4 HEX HEAD	022678	8	000	GEAR
GUARD-POWER SWITCH	034830	1	103	
GUIDE A.-DRIP PAN *338*	X51567	1	103	
GUIDE-DRIP PAN	068932	2	103	
GUIDE-FILTER-LEFT *C708/C709*	056941	1	103	
GUIDE-FILTER-RIGHT *C708/C709*	056943	1	103	
HARNESS-WIRE-BTR MTR *C723* L	068915-27L	1	103	208-230V 60HZ 1PH
HARNESS-WIRE-BTR MTR *C723* R	068915-27R	1	103	208-230V 60HZ 1PH
HARNESS-WIRE-BTR MTR *C723*	068915-33L	1	103	208-230V 60HZ 3PH
HARNESS-WIRE-BTR MTR *C723*	068915-33R	1	103	208-230V 60HZ 3PH
HARNESS-WIRE-CAP/RELAY BOX	069079-27G	1	103	208-230V 60HZ 1PH
HARNESS-WIRE-COMP *C723*	069079-33G	1	103	208-230V 60HZ 3PH
HARNESS-WIRE-CNTRL *C723*	068874	1	103	UPPER CONTROL
HARNESS-WIRE-DANFOSS *C723*	081309-27	1	103	
HARNESS-WIRE-LW V-CNTL*C723*	068917	1	103	LOWER CONTROL
HARNESS-WIRE-MAIN POWER *C723*	069083-27G	1	103	208-230V 60HZ 1PH
HARNESS-WIRE-MAIN POWER *C723*	069083-33G	1	103	208-230V 60HZ 3PH
HARNESS-WIRE-MIX LVL *C723*	068873	1	103	
INTERLOCK A.-DOOR	X65658	1	103	
SWITCH-REED*DOOR INTERLOCK*68"	056771	1	103	

DESCRIPTION	PART NUMBER	QTY.	WARR. CLASS	REMARKS
JACK A.-FLAVORBURST	X56353	2	103	
KIT A.-DANFOSS *GENERAL*	X48314SER2	1	512	
+COMPRESSOR TL3G-R134A	047701-27	1	512	
+CAPACITOR-START 60UF-220/275V	047703	1	103	
+COVER-TERMINAL-COMPRESSOR	047739	1	103	
+DRYER-CAP. TUBE .026ID X 13FT	047699	1	000	
+KIT-MOUNTING-COMPRESSOR	047704	1	000	
+RELAY-START-COMPRESSOR-TL3G	047702-27	1	103	
KIT A.-TUNE UP-3 SPT C713	X49463-80	1	000	
BEARING-FRONT	050216	2	000	
CAP-DESIGN 1.010"ID-6 POINT	014218	3	000	
GASKET-DOOR HT 4"-DOUBLE	048926	2	000	
O-RING-.643 OD X .077W	018572	8	000	
O-RING-1/2OD X .070W	024278	4	000	
O-RING-3/8 OD X .070W	016137	2	000	
O-RING-7/8 OD X .103W	014402	6	000	
SEAL-DRAW VALVE	034698	1	000	
SEAL-DRIVE SHAFT	032560	2	000	
TOOL-O-RING REMOVAL-FREEZER	048260-WHT	1	000	
KIT A.-SILICON O-RINGS	X69575	1	000	ADDED TO TUK S/N M1123969
O-RING-13/16 OD X .103W	019330	6	000	
LABEL-INSTRUCTION O-RING USA	069561	1	000	
LABEL-3PH MTR PROT/1PH C-	025949	1	000	208-230V 60HZ 3PH
LABEL-CAUTION-GRD-PERM-ENG/SP	032164	1	000	
LABEL-CK MTR ROTATE-CW-ENG/SPN	020090	1	000	208-230V 60HZ 3PH
LABEL-DOOR-MOVE PART	032749	1	000	
LABEL-SW-POWER-OFF/ON-SYMBOLS	052632	1	000	
LABEL-WARN-COVER	051433	5	000	
LABEL-WARN-ELEC-SGL-SMALL	032717	5	000	
LIP-DRIP-NOSE CONE-TWIN	036434	1	000	
LUBRICANT-TAYLOR 4 OZ.	047518	1	000	
MAN-OPER C723	069127-M	1	000	

DESCRIPTION	PART NUMBER	QTY.	WARR. CLASS	REMARKS
MOTOR-1.0 HP	013102-27	2	212	208-230V 60HZ 1PH
MOTOR-1.0 HP	013102-33	2	212	208-230V 60HZ 3PH
+LABEL-CK MTR ROTATE-CW-ENG/SPN	020090	2	000	208-230V 60HZ 3PH
+LABEL-CK MTR ROTATE-CW-ENG/SPN	020090	1	000	208-230V 60HZ 3PH
MOTOR-FAN 185W *WITH GUARD*	500302-27	1	103	MAIN COND FAN MOTOR
MOTOR-FAN 95.3 CFM 2700 RPM	062253-27	1	103	**SEE KIT A.-MOTOR-FAN X62253-27-AUX REF
+SCREW-10-32X3/8 UNSL HWH SERR	039381	2	000	
+GUARD-FAN	028534-1	1	103	
NUT-STUD-BLACK 2.563 LONG	058764	2	103	
NUT-STUD-BLACK 3.250 LONG	058765	2	103	
ORIFICE	022465-100	2	103	
+O-RING-3/8 OD X .070W	016137	2	000	
PAIL-MIX 10 QT.	013163	1	000	REPLACES 023348 12-12-11
PAN A.-DRIP 15 1/8 LONG	X51601	1	103	
PAN A.-DRIP-HINGED *794*	X41844	1	103	
+CHANNEL-REAR BEARING DRIP *794	041819	1	103	
PANEL A.-FRONT *C723*	X68777	1	103	
PANEL A.-FRONT-LOWER *C723*	X68858	1	103	
PANEL A.-SIDE RIGHT *C723*	X68854	1	103	
PANEL-REAR *C723*AC	069340	1	103	
PANEL-SIDE LEFT *C723*	068851	1	103	
PCB A.-CONTROL*C722/723* UVC4	X69137-SER	1	212	S/N M1063856 & UP-X40615 MODULE-PROGRAM C72* UVC4
CONTROL-UVC4	X68114-SER	1	212	
PCB A.-INTERFACE-HT-SS-UK ROHS	X63964-SER	2	212	LOWER CONTROL
PCB A.-INTERFACE BASE-UK	X63920-SER	2	212	
CHIP-SOFTWARE MIX LEVEL	X40799-SER	2	103	
PCB A.-ROHS-PERSONALITY-HT-SS	X63922-SER	2	212	
PCB A.-INTERFACE*C712-C717*ROHS	X63925-SER	1	212	DEC PLATE
+CABLE-RIBBON-14C-3"L-SIL/SIL	056864	1	212	
PLATE-DEC *C723*	068830	1	103	
PROBE A.-MIX	X56912	2	103	
+SPACER-PROBE-MIX-UPPER *C708*	056910	2	000	

DESCRIPTION	PART NUMBER	QTY.	WARR. CLASS	REMARKS
+SPACER-MIX PROBE *C708*	056985	2	000	
PROBE-MIX OUT *C708*	056908	2	103	
+SPACER-PROBE-MIX-MIDDLE *C708*	056907	2	000	
PULLEY-2AK20 X 5/8 BORE	034238	2	103	
PULLEY-2AK64-5/8 BORE	039695	2	103	
RELAY-3 POLE-20A-208/240 50/60	066795-33	1	103	UPPER CONTROL
RELAY-DPDT 100UA TO 7A 1/8HP	052111-03	2	103	UPPER CONTROL
RING A.-AIR FLOW-COND.*C708*	X57006	1	103	
SANITIZER-STERA SHEEN -GREEN	055492	1	000	
SHAFT-BEATER	054194	2	103	
+SEAL-DRIVE SHAFT	032560	2	000	
SHELF-DRIP TRAY *C722*	080782	1		S/N M2086696 & UP
SHELF-DRIP TRAY *C723*	068863	1	103	S/N M2086695 & PRIOR
SHELL A.-INSULATED *C723*	X68948-SER	1	512	
BEARING-REAR SHELL-NICKEL	031324	2	000	
GUIDE-DRIP SEAL	028992	2	000	
NUT-BEARING	028991	2	000	
WASHER-BEARING LOCK	012864	2	000	
+STUD-NOSE CONE *C602*	055987	4	103	
SHIELD-SPLASH-WIRE *C722*C72	046177-SP			S/N M2086696 & UP
SHIELD-SPLASH *M706/707/708 SS	049203	1	103	S/N M2086695 & PRIOR
SHROUD A.-CONDENSER *C708/C709	X56922	1	103	
SWITCH A.-DUAL LEVER *C71	X69838	1	103	S/N M1116244 & UP REPLACES X62400
ACTUATOR-TANDEM LEAF	062408	2	103	
SWITCH-LEVER-SPDT-10A-125-250V	028889	4	103	
WASHER-#6 SAE FLAT 18-8 SS	023546	2	000	
SWITCH A.-REED INTERLOCK DOOR	X65658	1	103	
SWITCH-REED*DOOR INTERLOCK*68"	056771	1	103	
SWITCH-PRESSURE 440 PSI-SOLDER	048230	1	103	LINE A.-DISCHARGE *C723*
SWITCH-TOGGLE-DPDT*VDE APPROVD	054809	1	103	REPLACES 068221
+GUARD-POWER SWITCH	034830	1	103	
STARTER-1 PHASE 4 TO 6.5 AMP	066794-27J	2	103	208-230V 60HZ 1PH - UPPER CONTROL

DESCRIPTION	PART NUMBER	QTY.	WARR. CLASS	REMARKS
+OVERLOAD-THERMAL-1P-4.0/6.5A	067461-1J	2	103	
STARTER-3 PHASE 2.5 TO 4 AMP	066794-33H	2	103	208-230V 60HZ 3PH
+OVERLOAD-THERMAL-3P-2.5/4.0A	067461-3H	2	103	
STUD-NOSE CONE *C602*	055987	4	103	
TRANS.-240V PR1/24V SEC 10 VA	030132-27	1	103	UPPER CONTROL
TRANS.-CONT.-32VA 120/200/240V	054834	1	103	UPPER CONTROL
TRAY-DRIP *C722*C723*	080781	1	103	S/N M2086696 & UP
TRAY-DRIP *C723*	068864	1	103	S/N M2086695 & PRIOR
TRIM-REAR CORNER-L *C723*	068846	1	103	
TRIM-REAR CORNER-R *C723*	068847	1	103	
TUBE A.-FEED-SS-5/32 HOLE DIA	X29429-2	2	103	
VALVE-ACCESS-1/4MFL X 3/8ODSDR	053565	4	103	LINE A.-DISCHARGE *C723*
+CAP-VALVE-ACCESS 9/16 HEX	054518	4	000	
+CAP-VALVE-ACCESS 13/16 HEX	054519	4	000	
+COUPLING-3/8FS X 1/4FS	031791	3	103	
VALVE-EPR 1/4S	022665	1	103	LINE A.-DANFOSS *C723*
VALVE-EXP-AUTO-1/4S X1/4 FPT	046365	2	103	
+BOOT-VALVE-EXPANSION	050900	2	000	
VALVE-SOLENOID 7/16 ORF 5/8ODF	048626-27	2	103	S/N M2016590 & UP
+BOOT-INSULATING-VALVE-SOL SUCT	080523	2	103	S/N M2125026 & UP
VALVE-SOLENOID 1/2ORF X 5	069559-27	2	103	S/N M1117098 THRU M2016589
VALVE-SOLENOID 7/64ORF X 1/4S	043449-27	2	103	LINE A.-LIQUID *C723*
WATER COOLED				
ACCUMULATOR-COPPER 2"DIA 13"	053377	1	103	
BRACKET-CAP/RELAY *C723*	069175	1	103	
CONDENSER-WC-SPIRAL 11-1/	049309	1	103	
COVER-ACCESS *C723*WC	069196	1	103	
FAN-5 BLADE 10 " PUSH	013043	1	103	
LABEL-INLET	037288	1	000	
MOTOR-FAN-25W 230V	015184-27	1	103	
+BRACKET-FAN *453/750*	038641	1	103	

DESCRIPTION	PART NUMBER	QTY.	WARR. CLASS	REMARKS
PANEL-REAR *C723*WC	069171	1	103	
PANEL-SIDE-RIGHT *C723*WC	069170	1	103	
SWITCH-PRESSURE 350 PSI-S	048231	1	103	
VALVE-WATER 3/8 REG/HEAD PRE	046686	1	103	
+BRACKET A.-FITTING*C706/C707	X64145-SP2	1	103	
50 HZ **C72335FW** 220-240V 50HZ 3PH, C72339FW** 200V 50/60HZ 3PH, C72340FW** 220-240V 50HZ 1PH, C72358FW** 380-415V 50HZ 3N~(4WIRE)**				
BLOCK-TERMINAL 3P L1,L2,L	039423	1	103	220-240 50 HZ 3PH - 200V 50/60HZ 3PH
BLOCK-TERMINAL 4 POLE GRE	080967	3	103	220-240 50 HZ 3PH - 200V 50/60HZ 3PH - 220-240V 50HZ 1PH - 380-415V 50HZ 3N~(4WIRE)
BLOCK-TERMINAL 3 POLE GRE	080968	1	103	220-240 50 HZ 3PH - 200V 50/60HZ 3PH - 220-240V 50HZ 1PH - 380-415V 50HZ 3N~(4WIRE)
+PLATE-END TERMINAL BLOCK	080969	2	103	220-240 50 HZ 3PH - 200V 50/60HZ 3PH - 220-240V 50HZ 1PH - 380-415V 50HZ 3N~(4WIRE)
BLOCK-TERMINAL 2P L1,N	039421	1	103	220-240V 50HZ 1PH
BLOCK-TERMINAL 4P L1,L2,L	039424	1	103	380-415V 50HZ 3N~(4WIRE)
CAPACITOR A.-RF	X58666	1	000	220-240V 50HZ 1PH
COMPRESSOR L63A113DBLA	048259-33	1	512	220-240 50 HZ 3PH - 200V 50/60HZ 3PH
COMPRESSOR L63A113BBKA	048259-40	1	512	220-240V 50HZ 1PH
COMPRESSOR L63A113DBEA	048259-58	1	512	380-415V 50HZ 3N~(4WIRE)
+CAPACITOR-RUN 25UF/370VAC	023739	1	103	220-240V 50HZ 1PH
+CAPACITOR-START 161-193UF	031790	1	103	220-240V 50HZ 1PH
+RELAY-START-COMPRESSOR	038146	1	103	220-240V 50HZ 1PH
DIAGRAM-WIRING *C723*	068807-39	1	000	220-240 50 HZ 3PH - 200V 50/60HZ 3PH
DIAGRAM-WIRING *C723*	068807-40	1	000	220-240V 50HZ 1PH
DIAGRAM-WIRING *C723*	068807-58	1	000	380-415V 50HZ 3N~(4WIRE)
HARNESS-WIRE-BTR MTR	068915-33L	1	103	220-240 50 HZ 3PH - 200V 50/60HZ 3PH - 380-415V 50HZ 3N~(4WIRE)
HARNESS-WIRE-BTR MTR	068915-33R	1	103	220-240 50 HZ 3PH - 200V 50/60HZ 3PH - 380-415V 50HZ 3N~(4WIRE)
HARNESS-WIRE-CAP/RELAY BOX	069079-40	1	103	220-240V 50HZ 1PH
HARNESS-WIRE-CNTRL *C723*	068874-G	1	103	220-240 50 HZ 3PH - 200V 50/60HZ 3PH - 220-240V 50HZ 1PH

DESCRIPTION	PART NUMBER	QTY.	WARR. CLASS	REMARKS
HARNESS-WIRE-COMP *C723*	069079-33G	1	103	220-240 50 HZ 3PH - 200V 50/60HZ 3PH - 380-415V 50HZ 3N~(4WIRE)
HARNESS-WIRE-DANFOSS *C72	081309-27G	1	103	220-240 50 HZ 3PH - 200V 50/60HZ 3PH - 220-240V 50HZ 1PH - 380-415V 50HZ 3N~(4WIRE)
HARNESS-WIRE-MAIN POWER *	069083-33G	1	103	220-240 50 HZ 3PH - 200V 50/60HZ 3PH
HARNESS-WIRE-MAIN POWER *	069083-40G	1	103	220-240V 50HZ 1PH
HARNESS-WIRE-MAIN POWER *	069083-58G	1	103	380-415V 50HZ 3N~(4WIRE)
MOTOR-1.0 HP	013102-33	2	212	220-240 50 HZ 3PH - 200V 50/60HZ 3PH
MOTOR-1.0 HP	013102-34	2	212	220-240V 50HZ 1PH
MOTOR-1.0 HP	013102-35	2	212	380-415V 50HZ 3N~(4WIRE)
LABEL-CK MTR ROTATE-CW-EN	020090	1	000	220-240 50 HZ 3PH - 200V 50/60HZ 3PH - 380-415V 50HZ 3N~(4WIRE)
LABEL-3PH MTR PROT/1PH	025949	1	000	220-240 50 HZ 3PH - 200V 50/60HZ 3PH - 380-415V 50HZ 3N~(4WIRE)
PULLEY-2AK25 X .6255-.626	021076	2	103	220-240V 50HZ 1PH - 380-415V 50HZ 3N~(4WIRE)
STARTER-3 PHASE 2.5 TO 4	066794-33H	2	103	220-240 50 HZ 3PH - 200V 50/60HZ 3PH
STARTER-3 PHASE 1.6 TO 2.	066794-33G	2	103	380-415V 50HZ 3N~(4WIRE)
ADJUSTABLE FEED TUBE				
TUBE A.-FEED-INNER-AIR/MI	X67103	2	103	
TUBE A.-FEED-OUTER-HT	X67104	2	103	
+O-RING-.291 ID X .080W	018550	6	000	
+O-RING-.643 OD X .077W	018572	4	000	
KIT A.-TUNE UP-3 SPT C713	X49463-80A	1	000	
C72327FWBE - ROHS COMPLIANT-HOPPER AGITATOR				
BLADE A.-AGITATOR	X56591-SP	2	103	
HARNESS-WIRE-MIX LVL	068873-HA	1	103	
HOUSING A.-AGITATOR	X56586-03	2	103	
BODY-AGITATOR HOUSING	056588	2	103	
CAP-AGITATOR HOUSING	056589	2	103	
O-RING-1-3/8 OD X .070W	017395	2	000	
MAGNET A.-AGITATOR-INNER	066937	1	103	
MAGNET A.-AGITATOR	X57341	2	103	

DESCRIPTION	PART NUMBER	QTY.	WARR. CLASS	REMARKS
SCREW-8-32X3/16 SOCKET SET	006812	2	000	
MOTOR-AGITATOR-24VAC 50/60 H	050535-03	2	103	
PLATE-HOLDING-AGITATOR *C708	056587	2	103	
+CAPACITOR-MOTOR-AGITATOR	057525	2	103	
SCREW-4-40X1/4 SOCKET HEAD	600165	4	000	
LABEL-CAUTION-AGITATOR	045191	2	000	
SHELL A.-INSULATED *C723*	X68775-SER	1	512	
STUD-NOSE CONE *C602*	055987	4	103	
TRANS.-120/208/240V PRI 2	051660	1	103	
REAR MIX LIGHTS				
CABLE-RIBBON-10C-73 DIL/D	040040-030	1	103	
TRIM A.-CORNER-LIGHTS *72	X69387-SER	1	103	
DECAL-REAR MIX LIGHTS *C723*	069413	1	000	
PCB A.-LED-4 POSITION	X63930-SER	1	212	
STANDOFF-NYLON 6-32X1/2L SNA	040280-002	2	000	
TRIM A.-REAR CORNER L. *723*	X69386	1	103	
C72333RWHH - ROHS COMPLIANT-REAR MIX LEVEL LIGHTS - SPCL FEED TUBE - NO TWIST				
CABLE-RIBBON-10C-73 DIL/D	040040-030	1	103	
DOOR A.-*SH BAF*W/PRG *C723*	X68889-SER		103	
+BEARING-FRONT	050216	2	000	
+CORE-VALVE *794*	066717	1	103	
+DECAL-DOOR-3 SPOUT-TWIN TWIS	062239	1	000	
+GASKET-DOOR HT 4"-DOUBLE	048926	2	000	
+HANDLE A.-DRAW *C602*C606*	X56421-1	2	103	
+SCREW-ADJUSTMENT-5/16-24 *60	056332	2	103	
+PLUG-PRIME TWIN *C712/C713*	059936	2	103	
+O-RING-1/4 OD X .070W 50 DUR	015872	2	000	
+O-RING-.500 OD X .070W	024278	4	000	
+PIN-HANDLE-TWIN *C712/C717*	059894	1	103	
+VALVE A.-DRAW *C712/C713*	X69615	2	103	
+O-RING-13/16 OD X .103W	019330	6	000	

DESCRIPTION	PART NUMBER	QTY.	WARR. CLASS	REMARKS
KIT A.-TUNE UP-3 SPT C713	X49463-80A	1	000	
TRIM A.-CORNER-LIGHTS *72	X69387	1	103	
TUBE A.-FEED-SC-INNER-5/3	X32824-2	2	103	
TUBE A.-FEED-OUTER-HT	X34641	2	103	
TOP AIR DISCHARGE				
PANEL A.-DUCT-RIGHT *C723	X68875-SER	1	103	
CART				
HC MODEL C206 CART	C20600-000			
BRACKET-HORIZONTAL BRACE	069061	2	103	
CASTER-3" SWV 3/4-10 STM W/B	030307	2	103	
CASTER-3" SWV 3/4-10STM X1"P	021279	2	103	
DOOR A.-STD CART *C723*	X69295	1	103	
HANDLE-STNLS FLUSH PULL	019043	1	103	
HINGE A.-DOOR *8634* LEFT	X45741	2	103	
HINGE A.-PIN *8634* LEFT	X45743	2	103	
HOOD A.-CART *C723*	X69059	1	103	
MAGNET 6-12LBS.	013645	1	103	
NUT-10-24 HEX MACHINE SCREW	076685	2	000	
NUT-10-32 WHIZ FLANGE LOCK	079150	4	000	
NUTSERT-10-32/.020-.130 GRIP	053431	2	103	
PANEL A.-STD CART-FRONT *C72	X69426	1	103	
PANEL-REAR-STD CART *C723*	069429	1	103	
PANEL-SIDE-STD CART *C723*	069428	2	103	
PLUG-HOLE 5/8 DIA-BLACK	033601	2	000	
SCREW-10-24X1/2 TORX TRUSS T	002077	16	000	
SCREW-10-32X1/2 SLTD TRUSS	037734	6	000	
SCREW-10-32X1/4 SLTD TRUSS	027408	8	000	
SCREW-6-32X5/8 SLTD ROUND	019309	2	000	
SPACER-PANEL MOUNTING 3/8	500281	4	103	
LONGER DRAW VALVES				

DESCRIPTION	PART NUMBER	QTY.	WARR. CLASS	REMARKS
VALVE A.-DRAW-CENTER	X66429	1	103	
VALVE A.-DRAW*C712/C713*	X66430	2	103	
O-RING-7/8 OD X .103W	014402	5	000	
C72327RWMU 208-230V 60HZ 1PH - W/C-BRISTOL-(R404A) - ROHS COMPLIANT-MARINE USE				
BLOCK-TERMINAL 3 POLE GRE	080968	1		
BLOCK-TERMINAL 4 POLE GRE	080967	3		
CHANNEL-CONTROL *C723*	068832-SPN	1		
DIAGRAM-WIRING *C723* MAR	068807M27W	1		
HARNESS-WIRE-CNTRL *C723*	068874-G	1		
HARNESS-WIRE-DANFOSS *C72	081309-27G	1		
PANEL A.-FRONT-LOWER *C72	X68858-SPN	1		
PANEL-REAR *C723*WC	069171-SPN	1		
PANEL-SIDE LEFT *C723*	068851-SPN	1		
PANEL-SIDE-RIGHT *C723*WC	069170-SPN	1		
PLATE-END TERMINAL BLOCK	080969	2		
SHELF-DRIP TRAY *C722*	080782-SPN	1		
TRIM-REAR CORNER-L *C723*	068846-SPN	1		
TRIM-REAR CORNER-R *C723*	068847-SPN	1		

Model C723
068807-27
6/3/13

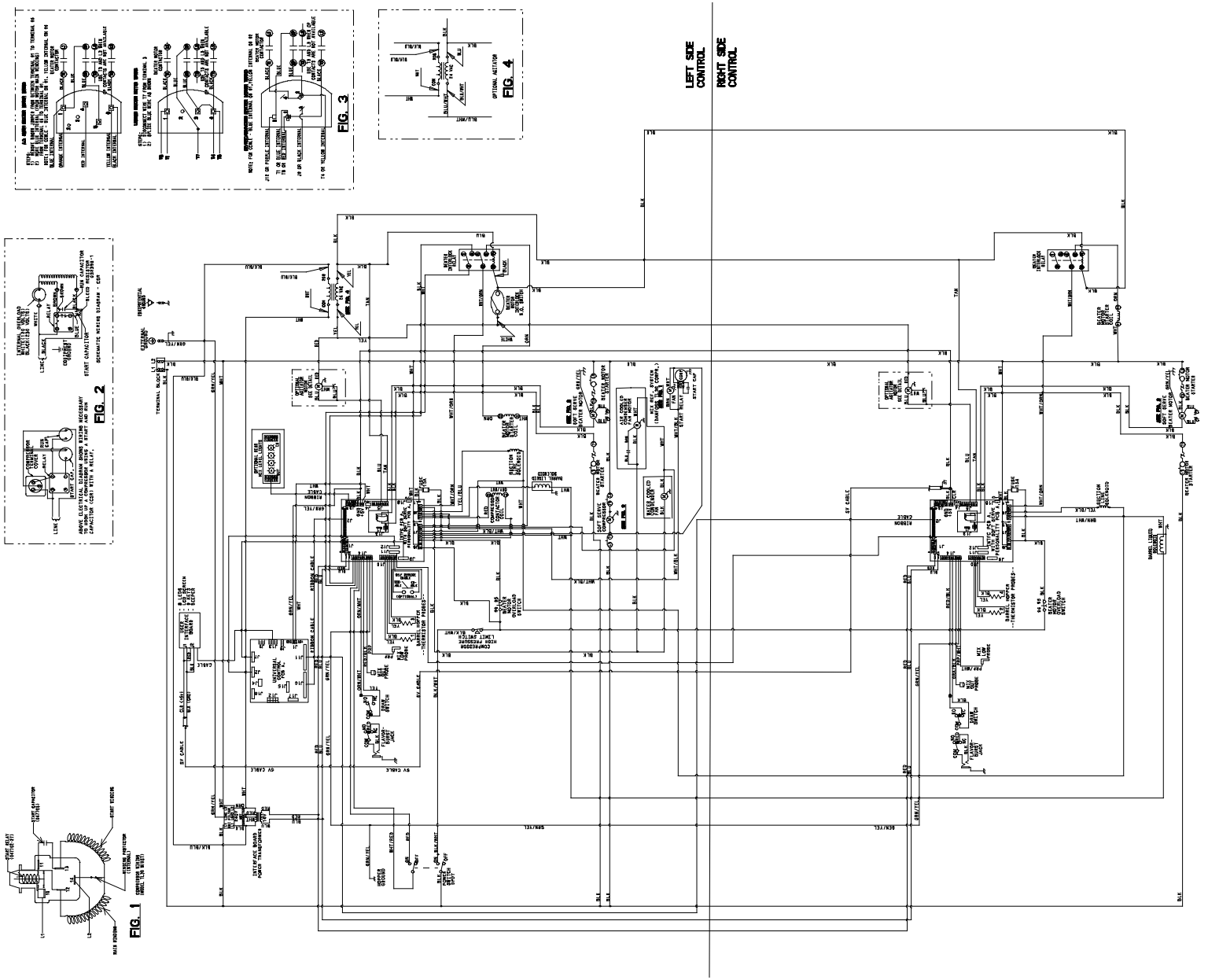

	UVC4 BOARD	FUNCTION	JUMPER INSTALLED INITIALLY
JP1	PINS 1 AND 2	JUMPER INSTALLED - BARREL AND HOPPER TEMPERATURES ARE CHECKED DURING AUTO/STANDBY. UNIT IS LOCKED OUT IF EITHER BARREL OR HOPPER IS TOO WARM FOR A PERIOD OF TIME. LOCKOUT OCCURS WHEN BARREL OR HOPPER IS ABOVE 45F(7C) FOR MORE THAN ONE HOUR OR ABOVE 41F(5C) FOR MORE THAN FOUR HOURS.	YES
		NO JUMPER INSTALLED - NO LOCKOUT DURING AUTO/STANDBY IF BARREL OR HOPPER IS TOO WARM FOR A PERIOD OF TIME.	
	PINS 3 AND 4	RESERVED (DO NOT USE)	NO
JP2	PINS 1 AND 2	DOMESTIC CONFIGURATION - JUMPER INSTALLED. HOPPER TEMPERATURE NOT DISPLAYED ON SCREEN/HEAT SYMBOL KEYS ONLY ACTIVE WHEN A LOCKOUT CONDITION HAS OCCURRED/STANDBY KEYS DISABLED.	YES
		INTERNATIONAL CONFIGURATION - NO JUMPER INSTALLED. HOPPER TEMPERATURES DISPLAYED ON SCREEN/MANUAL HEAT CYCLE START BY SELECTING HEAT SYMBOL/STANDBY KEYS FUNCTIONAL.	
JP3		RESERVED (DO NOT USE)	NO
JP4		RESERVED (DO NOT USE)	NO
JP5		RESERVED (DO NOT USE)	NO
JP6		RESERVED (DO NOT USE)	NO
JP7		JUMPER INSTALLED DISABLES RESET.	NO
RTCH		RESERVED (DO NOT USE)	NO
DBGEN		RESERVED (DO NOT USE)	NO

	LEFT INTERFACE BOARD	FUNCTION	JUMPER INSTALLED INITIALLY
W1		RESERVED (DO NOT USE)	NO
W2		JUMPER INSTALLED - FORCE BRUSH CLEAN STATUS.	NO
W3		RESERVED (DO NOT USE)	NO
W4		JUMPER INSTALLED - OPEN ALL LEFT SOLENOIDS.	NO
W5		RESERVED (DO NOT USE)	NO
W6		JUMPER INSTALLED - REDUCED MIX LOW SENSITIVITY.	NO
W7		JUMPER INSTALLED - REDUCED MIX OUT SENSITIVITY.	NO
J10		JUMPER INSTALLED W/SWITCH - SELF SERVE APPLICATION ONLY. LOCKS OUT TOUCH PANEL. NEW SWITCH ACTS AS THE ON/OFF ABILITY TO ACTIVATE THE TOUCH PANEL.	NO
A		0-6 AMP BEATER MOTOR AMPERAGE RANGE	NO
B		0-12 AMP BEATER MOTOR AMPERAGE RANGE	YES

	RIGHT INTERFACE BOARD	FUNCTION	JUMPER INSTALLED INITIALLY
W1		RESERVED (DO NOT USE)	NO
W2		JUMPER INSTALLED - ENABLES 59F HOPPER TEMPERATURE CHECK.	YES
W3		RESERVED (DO NOT USE)	NO
W4		JUMPER INSTALLED - OPEN ALL RIGHT SOLENOIDS.	NO
W5		RESERVED (DO NOT USE)	NO
W6		JUMPER INSTALLED - REDUCED MIX LOW SENSITIVITY.	NO
W7		JUMPER INSTALLED - REDUCED MIX OUT SENSITIVITY.	NO
A		0-6 AMP BEATER MOTOR AMPERAGE RANGE	NO
B		0-12 AMP BEATER MOTOR AMPERAGE RANGE	YES

NOTE:

1. STATIC ELECTRICITY MAY CAUSE DAMAGE TO SOLID STATE COMPONENTS. ELIMINATE STATIC ELECTRICITY BY TOUCHING GROUNDED UNIT BEFORE HANDLING SOLID STATE COMPONENTS.

2. RED WIRE ON RIBBON CABLES MUST BE CONNECTED TO PIN 1 AT EACH END.

GROUND FRAME SECURELY

Model C723
068807-33
6/3/13

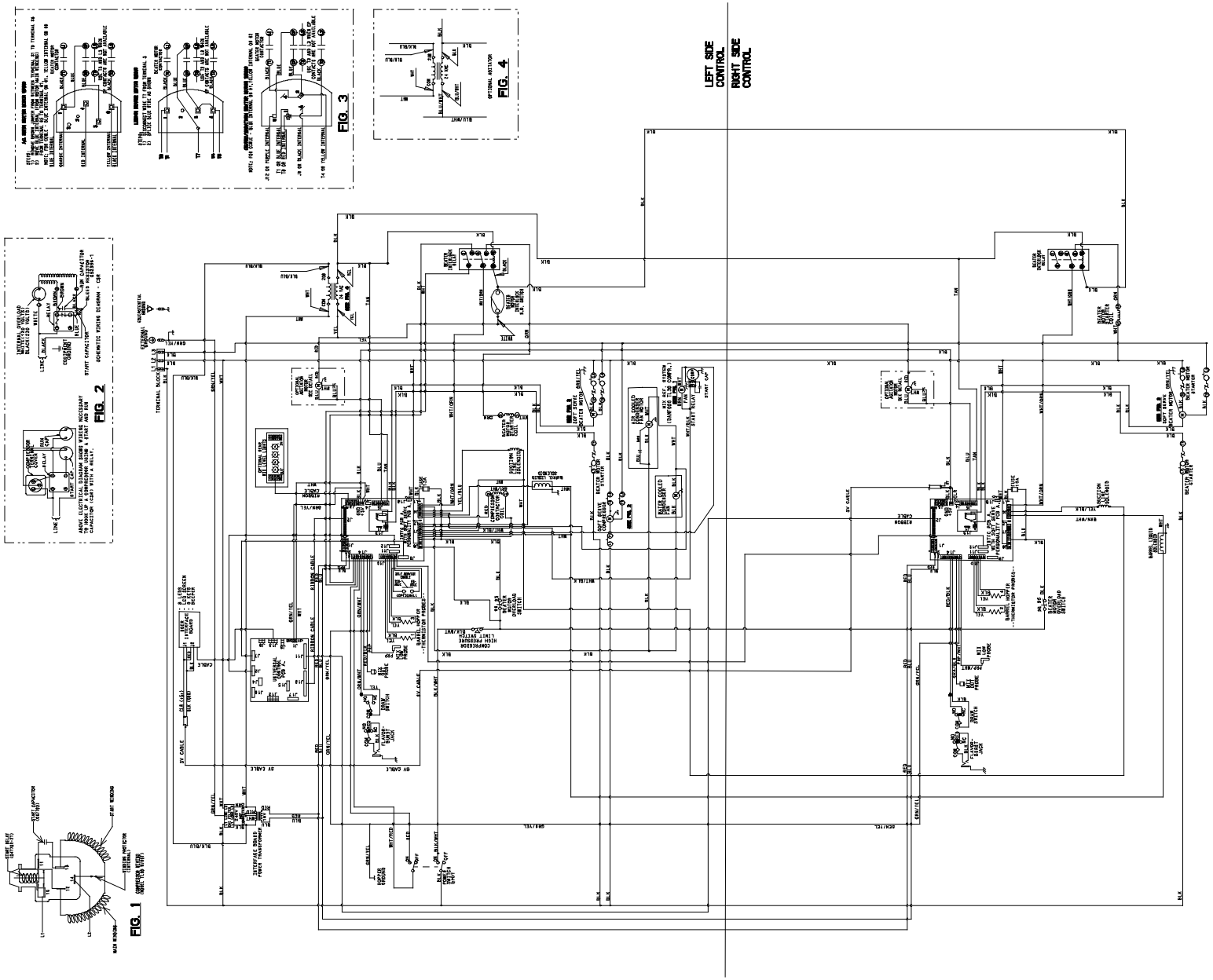

	UVC4 BOARD	FUNCTION	JUMPER INSTALLED INITIALLY
JP1	PINS 1 AND 2	JUMPER INSTALLED - BARREL AND HOPPER TEMPERATURES ARE CHECKED DURING AUTO/STANDBY. UNIT IS LOCKED OUT IF EITHER BARREL OR HOPPER IS TOO WARM FOR A PERIOD OF TIME. LOCKOUT OCCURS WHEN BARREL OR HOPPER IS ABOVE 45F(7C) FOR MORE THAN ONE HOUR OR ABOVE 41F(5C) FOR MORE THAN FOUR HOURS.	YES
	PINS 1 AND 2	NO JUMPER INSTALLED - NO LOCKOUT DURING AUTO/STANDBY IF BARREL OR HOPPER IS TOO WARM FOR A PERIOD OF TIME.	
	PINS 3 AND 4	RESERVED (DO NOT USE)	NO
JP2	PINS 1 AND 2	DOMESTIC CONFIGURATION - JUMPER INSTALLED. HOPPER TEMPERATURE NOT DISPLAYED ON SCREEN/HEAT SYMBOL KEYS ONLY ACTIVE WHEN A LOCKOUT CONDITION HAS OCCURRED/STANDBY KEYS DISABLED.	YES
		INTERNATIONAL CONFIGURATION - NO JUMPER INSTALLED. HOPPER TEMPERATURES DISPLAYED ON SCREEN/MANUAL HEAT CYCLE START BY SELECTING HEAT SYMBOL/STANDBY KEYS FUNCTIONAL.	
JP3		RESERVED (DO NOT USE)	NO
JP4		RESERVED (DO NOT USE)	NO
JP5		RESERVED (DO NOT USE)	NO
JP6		RESERVED (DO NOT USE)	NO
JP7		JUMPER INSTALLED DISABLES RESET.	NO
RTCX		RESERVED (DO NOT USE)	NO
DBGEN		RESERVED (DO NOT USE)	NO

	LEFT INTERFACE BOARD	FUNCTION	JUMPER INSTALLED INITIALLY
W1		RESERVED (DO NOT USE)	NO
W2		JUMPER INSTALLED - FORCE BRUSH CLEAN STATUS.	NO
W3		RESERVED (DO NOT USE)	NO
W4		JUMPER INSTALLED - OPEN ALL LEFT SOLENOIDS.	NO
W5		RESERVED (DO NOT USE)	NO
W6		JUMPER INSTALLED - REDUCED MIX LOW SENSITIVITY.	NO
W7		JUMPER INSTALLED - REDUCED MIX OUT SENSITIVITY.	NO
J10		JUMPER INSTALLED W/SWITCH - SELF SERVE APPLICATION ONLY. LOCKS OUT TOUCH PANEL. NEW SWITCH ACTS AS THE ON/OFF ABILITY TO ACTIVATE THE TOUCH PANEL.	NO
A		0-6 AMP BEATER MOTOR AMPERAGE RANGE	NO
B		0-12 AMP BEATER MOTOR AMPERAGE RANGE	YES

	RIGHT INTERFACE BOARD	FUNCTION	JUMPER INSTALLED INITIALLY
W1		RESERVED (DO NOT USE)	NO
W2		JUMPER INSTALLED - ENABLES 59F HOPPER TEMPERATURE CHECK.	YES
W3		RESERVED (DO NOT USE)	NO
W4		JUMPER INSTALLED - OPEN ALL RIGHT SOLENOIDS.	NO
W5		RESERVED (DO NOT USE)	NO
W6		JUMPER INSTALLED - REDUCED MIX LOW SENSITIVITY.	NO
W7		JUMPER INSTALLED - REDUCED MIX OUT SENSITIVITY.	NO
A		0-6 AMP BEATER MOTOR AMPERAGE RANGE	NO
B		0-12 AMP BEATER MOTOR AMPERAGE RANGE	YES

NOTE:

1. STATIC ELECTRICITY MAY CAUSE DAMAGE TO SOLID STATE COMPONENTS. ELIMINATE STATIC ELECTRICITY BY TOUCHING GROUNDED UNIT BEFORE HANDLING SOLID STATE COMPONENTS.
2. RED WIRE ON RIBBON CABLES MUST BE CONNECTED TO PIN 1 AT EACH END.

GROUND FRAME SECURELY

Model C723
068807-58
6/3/13

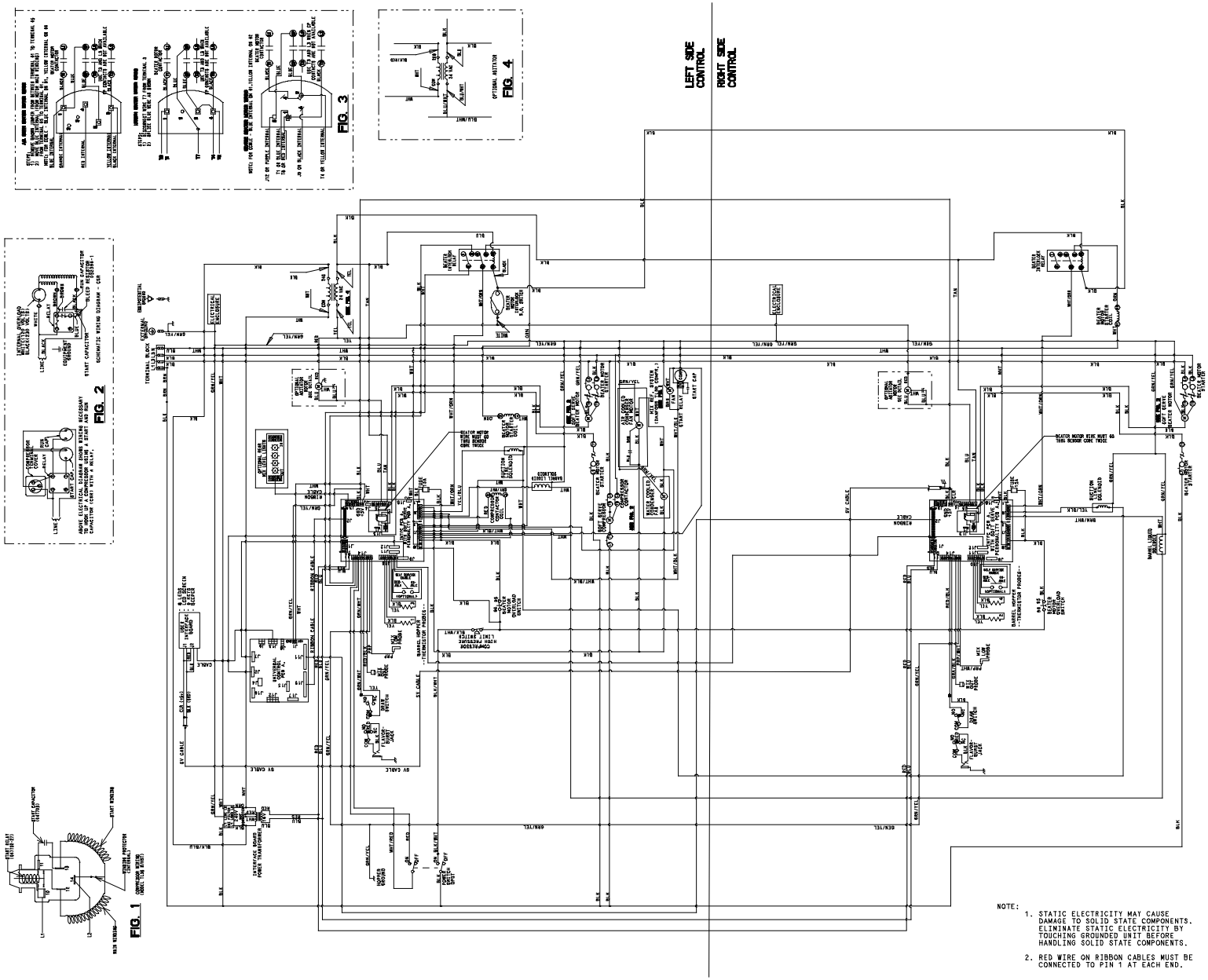

	UVC4 BOARD	FUNCTION	JUMPER INSTALLED INITIALLY
JP1	PINS 1 AND 2	JUMPER INSTALLED - BARREL AND HOPPER TEMPERATURES ARE CHECKED DURING AUTO/STANDBY. UNIT IS LOCKED OUT IF EITHER BARREL OR HOPPER IS TOO WARM FOR A PERIOD OF TIME. LOCKOUT OCCURS WHEN BARREL OR HOPPER IS ABOVE 45F(7C) FOR MORE THAN ONE HOUR OR ABOVE 41F(5C) FOR MORE THAN FOUR HOURS.	YES
		NO JUMPER INSTALLED - NO LOCKOUT DURING AUTO/STANDBY IF BARREL OR HOPPER IS TOO WARM FOR A PERIOD OF TIME.	
	PINS 3 AND 4	RESERVED (DO NOT USE)	NO
JP2	PINS 1 AND 2	DOMESTIC CONFIGURATION - JUMPER INSTALLED. HOPPER TEMPERATURE NOT DISPLAYED ON SCREEN/HEAT SYMBOL KEYS ONLY ACTIVE WHEN A LOCKOUT CONDITION HAS OCCURRED/STANDBY KEYS DISABLED.	NO
		INTERNATIONAL CONFIGURATION - NO JUMPER INSTALLED. HOPPER TEMPERATURES DISPLAYED ON SCREEN/MANUAL HEAT CYCLE START BY SELECTING HEAT SYMBOL/STANDBY KEYS FUNCTIONAL.	
JP3		RESERVED (DO NOT USE)	NO
JP4		RESERVED (DO NOT USE)	NO
JP5		RESERVED (DO NOT USE)	NO
JP6		RESERVED (DO NOT USE)	NO
JP7		JUMPER INSTALLED DISABLES RESET.	NO
RTCK		RESERVED (DO NOT USE)	NO
DBGEN		RESERVED (DO NOT USE)	NO

	LEFT INTERFACE BOARD	FUNCTION	JUMPER INSTALLED INITIALLY
W1		RESERVED (DO NOT USE)	NO
W2		JUMPER INSTALLED - FORCE BRUSH CLEAN STATUS.	NO
W3		RESERVED (DO NOT USE)	NO
W4		JUMPER INSTALLED - OPEN ALL LEFT SOLENOIDS.	NO
W5		RESERVED (DO NOT USE)	NO
W6		JUMPER INSTALLED - REDUCED MIX LOW SENSITIVITY.	NO
W7		JUMPER INSTALLED - REDUCED MIX OUT SENSITIVITY.	NO
J10		JUMPER INSTALLED W/SWITCH - SELF SERVE APPLICATION ONLY. LOCKS OUT TOUCH PANEL. NEW SWITCH ACTS AS THE ON/OFF ABILITY TO ACTIVATE THE TOUCH PANEL.	NO
A		0-6 AMP BEATER MOTOR AMPERAGE RANGE	NO
B		0-12 AMP BEATER MOTOR AMPERAGE RANGE	YES

	RIGHT INTERFACE BOARD	FUNCTION	JUMPER INSTALLED INITIALLY
W1		RESERVED (DO NOT USE)	NO
W2		JUMPER INSTALLED - ENABLES 59F HOPPER TEMPERATURE CHECK.	YES
W3		RESERVED (DO NOT USE)	NO
W4		JUMPER INSTALLED - OPEN ALL RIGHT SOLENOIDS.	NO
W5		RESERVED (DO NOT USE)	NO
W6		JUMPER INSTALLED - REDUCED MIX LOW SENSITIVITY.	NO
W7		JUMPER INSTALLED - REDUCED MIX OUT SENSITIVITY.	NO
A		0-6 AMP BEATER MOTOR AMPERAGE RANGE	NO
B		0-12 AMP BEATER MOTOR AMPERAGE RANGE	YES

NOTE:

1. STATIC ELECTRICITY MAY CAUSE DAMAGE TO SOLID STATE COMPONENTS. ELIMINATE STATIC ELECTRICITY BY TOUCHING GROUNDED UNIT BEFORE HANDLING SOLID STATE COMPONENTS.
2. RED WIRE ON RIBBON CABLES MUST BE CONNECTED TO PIN 1 AT EACH END.