Model C712

Soft Serve Freezer

Operating Instructions

062179-M

2/03/05

Complete this page for quick reference when service is required:

Taylor Distributor: _____

Address: _____

Phone: _____

Fax: _____

E-mail: _____

Service: _____

Parts: _____

Date of Installation: _____

Information found on the data label:

Model Number: _____

Serial Number: _____

Electrical Specs: Voltage _____ Cycle _____

Phase _____

Maximum Fuse Size: _____ A

Minimum Wire Ampacity: _____ A

© February, 2005 Taylor
All rights reserved.
062179-M

TAYLOR®

The word Taylor and the Crown design are registered trademarks in the United States of America and certain other countries.

Taylor Company
a division of Carrier Commercial Refrigeration, Inc.
750 N. Blackhawk Blvd.
Rockton, IL 61072

Table of Contents

Section 1 To the Installer 1

Installer Safety 1
Site Preparation 1
Air Cooled Units 1
Water Connections (Water Cooled Units Only) 2
Electrical Connections 2
Beater Rotation 3
Refrigerant 3

Section 2 To the Operator 4

Section 3 Safety 5

Section 4 Operator Parts Identification 7

Model C712 7
Model C712 Door and Beater Assembly 9
X57029-XX Pump A. - Mix Simplified 10
Accessories 11
Brushes 12

Section 5 Important: To the Operator 13

Symbol Definitions 14
Operating Screen Descriptions 15
Manager's Menu 16

Section 6 Operating Procedures 21

Freezing Cylinder Assembly 21
Mix Pump Assembly 26
Sanitizing 28
Priming 30
Manual Brush Cleaning 30

Draining Product From The Freezing Cylinder 30
Rinsing 31
Hopper Cleaning 31
Disassembly 32
Brush Cleaning 32

Section 7 Important: Operator Checklist 34

During Cleaning and Sanitizing 34
Troubleshooting Bacterial Count 34
Regular Maintenance Checks 34
Winter Storage 35

Section 8 Troubleshooting Guide 36

Section 9 Parts Replacement Schedule 39

Section 10 Parts List 40

Wiring Diagrams 49

Note: Continuing research results in steady improvements; therefore, information in this manual is subject to change without notice.

© February, 2005 Taylor
All rights reserved.
062179-M

TAYLOR®

The word Taylor and the Crown design are registered trademarks in the United States of America and certain other countries.

Taylor Company
a division of Carrier Commercial Refrigeration, Inc.
750 N. Blackhawk Blvd.
Rockton, IL 61072

Section 1 To the Installer

The following are general installation instructions. For complete installation details, please see the check out card.

Installer Safety

In all areas of the world, equipment should be installed in accordance with existing local codes. Please contact your local authorities if you have any questions.

Care should be taken to ensure that all basic safety practices are followed during the installation and servicing activities related to the installation and service of Taylor equipment.

- Only authorized Taylor service personnel should perform installation and repairs on the equipment.
- Authorized service personnel should consult OSHA Standard 29CFRI910.147 or the applicable code of the local area for the industry standards on lockout/tagout procedures before beginning any installation or repairs.
- Authorized service personnel must ensure that the proper PPE is available and worn when required during installation and service.
- Authorized service personnel must remove all metal jewelry, rings, and watches before working on electrical equipment.

The main power supply(s) to the freezer must be disconnected prior to performing any repairs. Failure to follow this instruction may result in personal injury or death from electrical shock or hazardous moving parts as well as poor performance or damage to the equipment.

Note: All repairs must be performed by an authorized Taylor Service Technician.

This unit has many sharp edges that can cause severe injuries.

Site Preparation

Review the area the unit is to be installed in before uncrating the unit making sure that all possible hazards the user or equipment may come into have been addressed.

Air Cooled Units

The Model C712 air cooled unit requires a minimum of 3” (76 mm) of clearance on all sides. Install the deflector provided to prevent recirculation of warm air. This will allow for adequate air flow across the condenser. Failure to allow adequate clearance can reduce the refrigeration capacity of the freezer and possibly cause permanent damage to the compressor.

For Indoor Use Only: This unit is designed to operate indoors, under normal ambient temperatures of 70°-75°F (21°-24°C). The freezer has successfully performed in high ambient temperatures of 104°(40°C) at reduced capacities.

This unit must **NOT** be installed in an area where a water jet or hose can be used. **NEVER** use a water jet or hose to rinse or clean the unit. Failure to follow this instruction may result in electrocution.

This unit must be installed on a level surface to avoid the hazard of tipping. Extreme care should be taken in moving this equipment for any reason. Two or more persons are required to safely move this unit. Failure to comply may result in personal injury or equipment damage.

Uncrate the unit and inspect it for damage. Report any damage to your Taylor Distributor.

This piece of equipment is made in the USA and has USA sizes of hardware. All metric conversions are approximate and vary in size.

Water Connections

(Water Cooled Units Only)

An adequate cold water supply must be provided with a hand shut-off valve. On the underside of the base pan or on the right side, two 3/8” I.P.S. water connections for inlet and outlet are provided for easy hook-up. 1/2” inside diameter water lines should be connected to the machine. (Flexible lines are recommended, if local codes permit.) Depending on local water conditions, it may be advisable to install a water strainer to prevent foreign substances from clogging the automatic water valve. There will be only one water “in” and one water “out” connection. DO NOT install a hand shut-off valve on the water “out” line! Water should always flow in this order: first, through the automatic water valve; second, through the condenser; and third, through the outlet fitting to an **open trap drain.**

A back flow prevention device is required on the incoming water connection side. Please refer to the applicable National, State, and local codes for determining the proper configuration.

Electrical Connections

In the United States, this equipment is intended to be installed in accordance with the National Electrical Code (NEC), ANSI/NFPA 70-1987. The purpose of the NEC code is the practical safeguarding of persons and property from hazards arising from the use of electricity. This code contains provisions considered necessary for safety. In all other areas of the world, equipment should be installed in accordance with the existing local codes. Please contact your local authorities.

FOLLOW YOUR LOCAL ELECTRICAL CODES!

Each unit requires one power supply for each data label on the unit. Check the data label on the freezer for fuse, circuit ampacity and other electrical specifications. Refer to the wiring diagram provided inside of the electrical box, for proper power connections.

CAUTION: THIS EQUIPMENT MUST BE PROPERLY GROUNDED! FAILURE TO DO SO CAN RESULT IN SEVERE PERSONAL INJURY FROM ELECTRICAL SHOCK!

DO NOT operate this freezer with larger fuses than specified on the unit data label. Failure to follow this instruction may result in electrocution or damage to the machine.

This unit is provided with an equipotential grounding lug that is to be properly attached to the rear of the frame by the authorized installer. The installation location is marked by the equipotential bonding symbol (5021 of IEC 60417-1) on both the removable panel and the equipments frame.

Stationary appliances which are not equipped with a power cord and a plug or another device to disconnect the appliance from the power source must have an all-pole disconnecting device with a contact gap of at least 3mm installed in the external installation.

Appliances that are permanently connected to fixed wiring and for which leakage currents may exceed 10 mA, particularly when disconnected or not used for long periods, or during initial installation, shall have protective devices such as a GFI, to protect against the leakage of current, installed by the authorized personnel to the local codes.

Supply cords used with this unit shall be oil-resistant, sheathed flexible cable not lighter than ordinary polychloroprene or other equivalent synthetic elastomer-sheathed cord (Code designation 60245 IEC 57) installed with the proper cord anchorage to relieve conductors from strain, including twisting, at the terminals and protect the insulation of the conductors from abrasion.

Beater Rotation

Beater rotation must be clockwise as viewed looking into the freezing cylinder.

Note: The following procedures should be performed by a trained service technician.

To correct the rotation on a three-phase unit, interchange any two incoming power supply lines at freezer main terminal block only.

To correct rotation on a single-phase unit, change the leads inside the beater motor. (Follow the diagram printed on the motor.)

Electrical connections are made directly to the terminal block provided in the splice box.

Refrigerant

In consideration of our environment, Taylor proudly uses only earth friendly HFC refrigerants. The HFC refrigerant used in this unit is R404A. This refrigerant is generally considered non-toxic and non-flammable, with an Ozone Depleting Potential (ODP) of zero (0).

However, any gas under pressure is potentially hazardous and must be handled with caution.

NEVER fill any refrigerant cylinder completely with liquid. Filling the cylinder to approximately 80% will allow for normal expansion.

Refrigerant liquid sprayed onto the skin may cause serious damage to tissue. Keep eyes and skin protected. If refrigerant burns should occur, flush immediately with cold water. If burns are severe, apply ice packs and contact a physician immediately.

Taylor reminds technicians to be cautious of government laws regarding refrigerant recovery, recycling, and reclaiming systems. If you have any questions regarding these laws, please contact the factory Service Department.

WARNING: R404A refrigerant used in conjunction with polyolester oils is extremely moisture absorbent. When opening a refrigeration system, the maximum time the system is open must not exceed 15 minutes. Cap all open tubing to prevent humid air or water from being absorbed by the oil.

Section 2 To the Operator

Your freezer has been carefully engineered and manufactured to give you dependable operation.

This unit, when properly operated and cared for, will produce a consistent quality product. Like all mechanical products, it will require cleaning and maintenance. A minimum amount of care and attention is necessary if the operating procedures outlined in this manual are followed closely.

This Operator's Manual should be read before operating or performing any maintenance on your equipment.

Your Taylor freezer will NOT eventually compensate for and correct any errors during the set-up or filling operations. Thus, the initial assembly and priming procedures are of extreme importance. It is strongly recommended that personnel responsible for the equipment's operation, both assembly and disassembly, go through these procedures together in order to be properly trained and to make sure that no confusion exists.

In the event you should require technical assistance, please contact your local authorized Taylor Distributor.

Note: Warranty is valid only if the parts are authorized Taylor parts, purchased from an authorized Taylor Distributor, and the required service work is provided by an authorized Taylor service technician. Taylor reserves the right to deny warranty claims on equipment or parts if non-approved parts or refrigerant were installed in the machine, system modifications were performed beyond factory recommendations, or it is determined that the failure was caused by neglect or abuse.

Note: Constant research results in steady improvements; therefore, information in this manual is subject to change without notice.

If the crossed out wheeled bin symbol is affixed to this product, it signifies that this product is compliant with the EU Directive as well as other similar legislation in effect after August 13, 2005. Therefore, it must be collected separately after its use is completed, and cannot be disposed as unsorted municipal waste.

The user is responsible for returning the product to the appropriate collection facility, as specified by your local code.

For additional information regarding applicable local laws, please contact the municipal facility and/or local distributor.

Compressor Warranty Disclaimer

The refrigeration compressors on this machine are warranted for the term indicated on the warranty card accompanying this machine. However, due to the Montreal Protocol and the U.S. Clean Air Act Amendments of 1990, many new refrigerants are being tested and developed, thus seeking their way into the service industry. Some of these new refrigerants are being advertised as drop-in replacements for numerous applications. It should be noted that, in the event of ordinary service to this machine's refrigeration system, **only the refrigerant specified on the affixed data label should be used**. The unauthorized use of alternate refrigerants will void your compressor warranty. It will be the owner's responsibility to make this fact known to any technician he employs.

It should also be noted that Taylor does not warrant the refrigerant used in its equipment. For example, if the refrigerant is lost during the course of ordinary service to this machine, Taylor has no obligation to either supply or provide its replacement either at billable or unbillable terms. Taylor does have the obligation to recommend a suitable replacement if the original refrigerant is banned, obsoleted, or no longer available during the five year warranty of the compressor.

Taylor will continue to monitor the industry and test new alternates as they are being developed. Should a new alternate prove, through our testing, that it would be accepted as a drop-in replacement, then the above disclaimer would become null and void. To find out the current status of an alternate refrigerant as it relates to your compressor warranty, call the local Taylor Distributor or the Taylor Factory. Be prepared to provide the Model/Serial Number of the unit in question.

080908

Section 3 Safety

We at Taylor are concerned about the safety of the operator when he or she comes in contact with the freezer and its parts. Taylor has gone to extreme efforts to design and manufacture built-in safety features to protect both you and the service technician. As an example, warning labels have been attached to the freezer to further point out safety precautions to the operator.

To Operate Safely:

IMPORTANT - Failure to adhere to the following safety precautions may result in severe personal injury or death. Failure to comply with these warnings may damage the machine and its components. Component damage will result in part replacement expense and service repair expense.

DO NOT operate the freezer without reading this Operator Manual. Failure to follow this instruction may result in equipment damage, poor freezer performance, health hazards, or personal injury.

This unit is provided with an equipotential grounding lug that is to be properly attached to the rear of the frame by the authorized installer. The installation location is marked by the equipotential bonding symbol (5021 of IEC 60417-1) on both the removable panel and the equipments frame.

DO NOT use a water jet to clean or rinse the freezer. Failure to follow these instructions may result in serious electrical shock.

- **DO NOT** operate the freezer unless it is properly grounded.
- **DO NOT** operate the freezer with larger fuses than specified on the freezer data label.
- **DO NOT** attempt any repairs unless the main power supply to the freezer has been disconnected.
- Stationary appliances which are not equipped with a power cord and a plug or another device to disconnect the appliance from the power source must have an all-pole disconnecting device with a contact gap of at least 3mm installed in the external installation.
- Appliances that are permanently connected to fixed wiring and for which leakage currents may exceed 10 mA, particularly when disconnected or not used for long periods, or during initial installation, shall have protective devices such as a GFI, to protect against the leakage of current, installed by the authorized personnel to the local codes.
- Supply cords used with this unit shall be oil-resistant, sheathed flexible cable not lighter than ordinary polychloroprene or other equivalent synthetic elastomer-sheathed cord (Code designation 60245 IEC 57) installed with the proper cord anchorage to relieve conductors from strain, including twisting, at the terminals and protect the insulation of the conductors from abrasion.

Failure to follow these instructions may result in electrocution. Contact your local authorized Taylor Distributor for service.

- **DO NOT** allow untrained personnel to operate this machine.
- **DO NOT** operate the freezer unless all service panels and access doors are restrained with screws.
- **DO NOT** remove any internal operating parts (examples: freezer door, beater, scraper blades, etc.) unless all control switches are in the OFF position.

Failure to follow these instructions may result in severe personal injury to fingers or hands from hazardous moving parts.

This unit has many sharp edges that can cause severe injuries.

- **DO NOT** put objects or fingers in the door spout. This may contaminate the product and cause severe personal injury from blade contact.
- **USE EXTREME CAUTION** when removing the beater asssembly. The scraper blades are very sharp.
- **CAUTION-SHARP EDGES:** Two people are required to handle the cup/cone dispenser. Protective gloves must be worn and the mounting holes must NOT be used to lift or hold the dispenser. Failure to follow this instruction can result in personal injury to fingers or equipment damage.

Cleaning and sanitizing schedules are governed by your state or local regulatory agencies and must be followed accordingly. Please refer to the cleaning section of this manual for the proper procedure to clean this unit.

DO NOT obstruct air intake and discharge openings:

A minimum of 3” (76 mm) air space is required on all sides. Install the deflector provided to prevent recirculation of warm air. Failure to follow this instruction may cause poor freezer performance and damage to the machine.

For Indoor Use Only: This unit is designed to operate indoors, under normal ambient temperatures of 70° - 75°F (21° - 24°C). The freezer has successfully performed in high ambient temperatures of 104°(40°C) at reduced capacities.

NOISE LEVEL: Airborne noise emission does not exceed 78 dB(A) when measured at a distance of 1.0 meter from the surface of the machine and at a height of 1.6 meters from the floor.

Section 4 Operator Parts Identification

Model C712

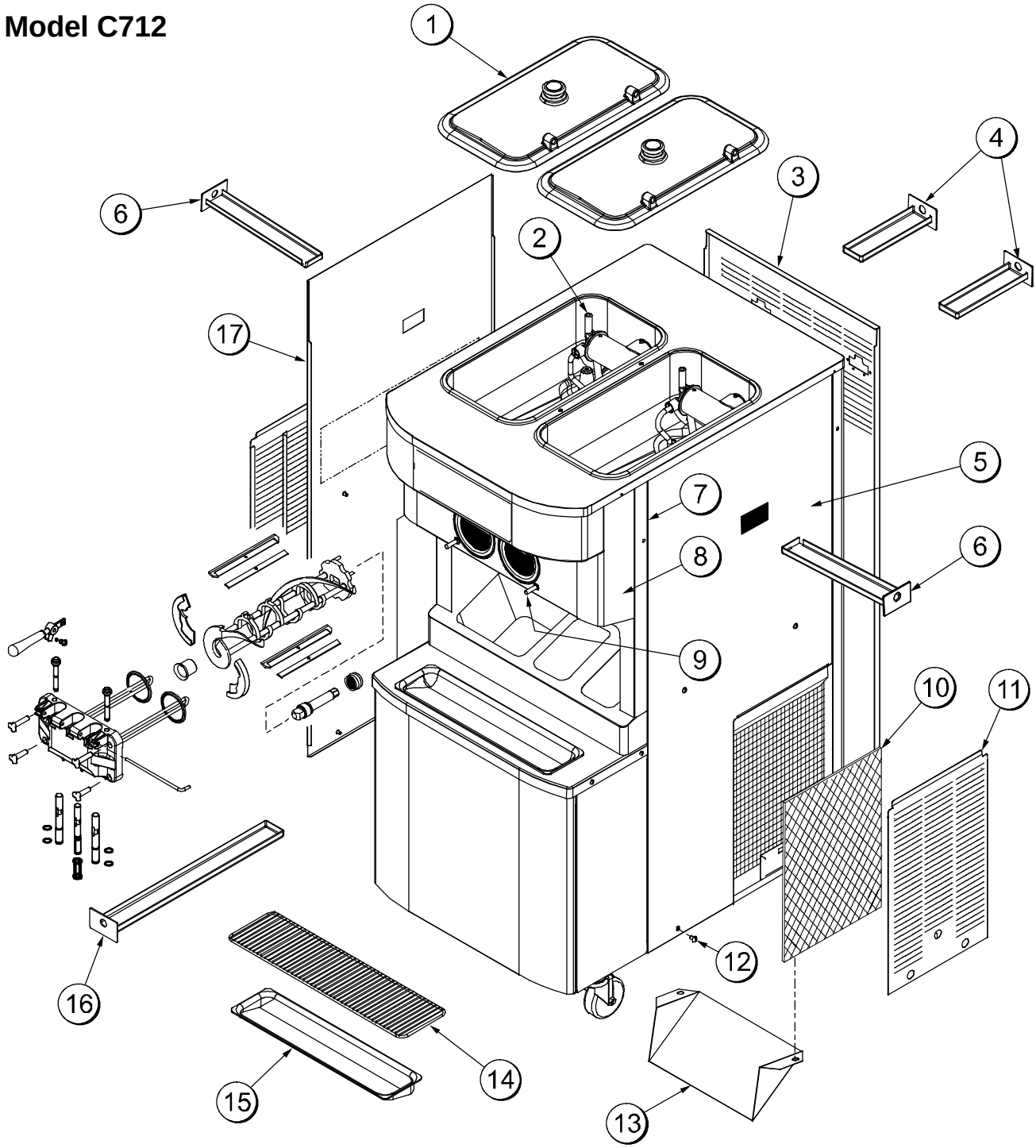

Figure 1

C712 Exploded View Parts Identification

ITEM	DESCRIPTION	PART NO.
1	COVER-HOPPER	053809-1
2	PUMP A.-MIX SIMPLIFIED	X57029-14
3	PANEL-REAR	059916
4	PAN-DRIP 7.875	059737
5	PANEL-SIDE*RIGHT	059907
6	PAN-DRIP 12.5	059736
7	PANEL A.-FRONT	X59920
8	PANEL A.-FRONT	X59836
9	STUD-NOSE CONE	055987

ITEM	DESCRIPTION	PART NO.
10	FILTER-AIR-POLY-FLO	052779-11
11	PANEL A.-FILTER-LOUVERED	X59928
12	SCREW-1/4-20 X 3/8 RHM-STNL	011694
13	DEFLECTOR-BLOWER EXHAUST	047912
14	SHIELD-SPLASH-WIRE-19-3/4 L	033813
15	TRAY-DRIP-19-5/8 L X 4-7/8	033812
16	PAN-DRIP 19-1/2 LONG	035034
17	PANEL-SIDE-LEFT	059906

Model C712 Door and Beater Assembly

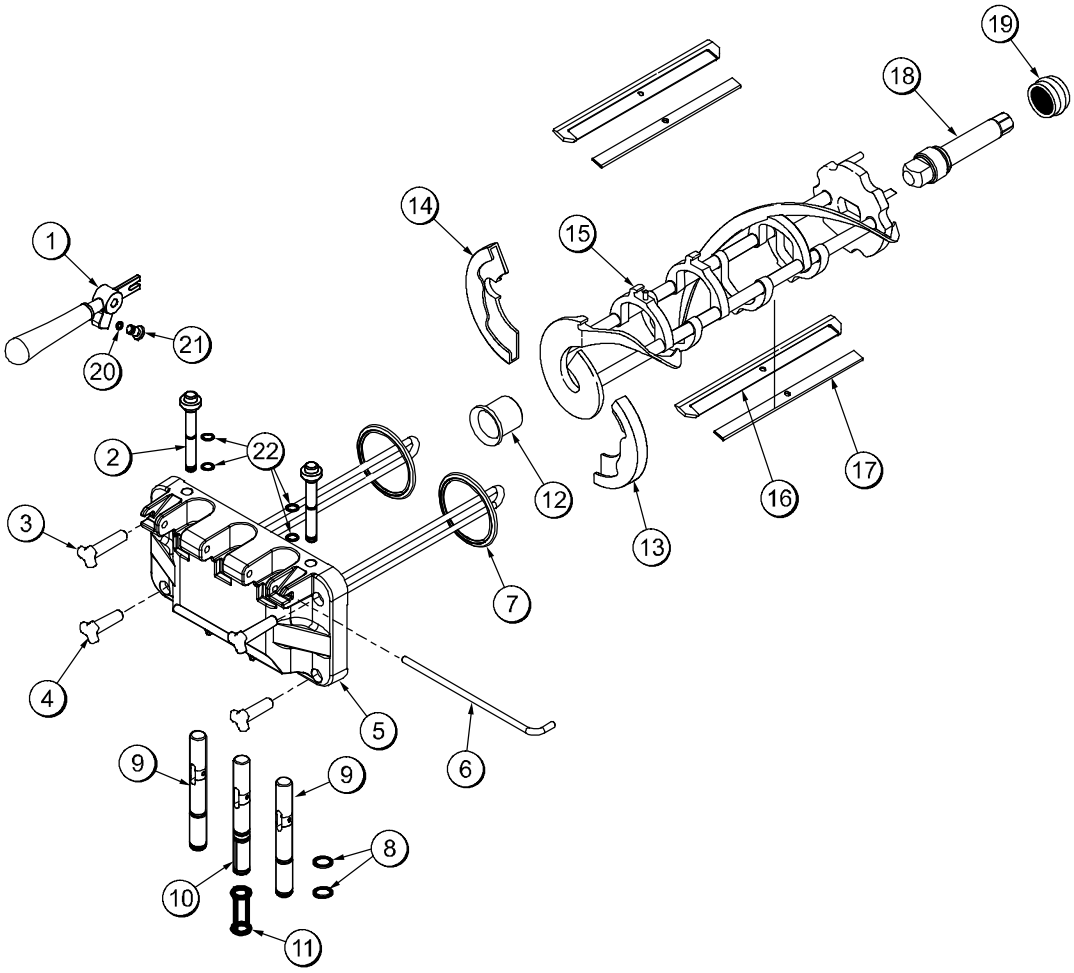

Figure 2

ITEM	DESCRIPTION	PART NO.
1	HANDLE A.-DRAW-WELDED	X56421-1
2	PLUG-PRIME TWIN	059936
3	NUT-STUD-BLACK 3.250 L	058765
4	NUT-STUD-BLACK 2.563 L	058764
5	DOOR A.-3SPT*LG BAFw/PRG	X59921-SER
6	PIN-HANDLE-TWIN	059894
7	GASKET-DOOR HT 4”-DOUBLE	048926-1
8	O-RING-7/8 OD X .103 W	014402
9	VALVE A.-DRAW	X59843
10	VALVE A.-DRAW CENTER	X62218
11	SEAL-DRAW VALVE	034698

ITEM	DESCRIPTION	PART NO.
12	BEARING-FRONT-SHOE	050348
13	SHOE-FRONT HELIX *REAR	050346
14	SHOE-FRONT HELIX *FRONT	050347
15	BEATER A.-3.4QT-1 PIN	X46231
16	BLADE-SCRAPER-PLASTIC	046235
17	CLIP-SCRAPER BLADE 7.00	046236
18	SHAFT-BEATER	032564
19	SEAL-DRIVE SHAFT	032560
20	O-RING-1/4 OD X .070W 50	015872
21	SCREW-ADJUSTMENT-5/16-24	056332
22	O-RING 1/2 OD X .070	024278

X57029-XX Pump A. - Mix Simplified

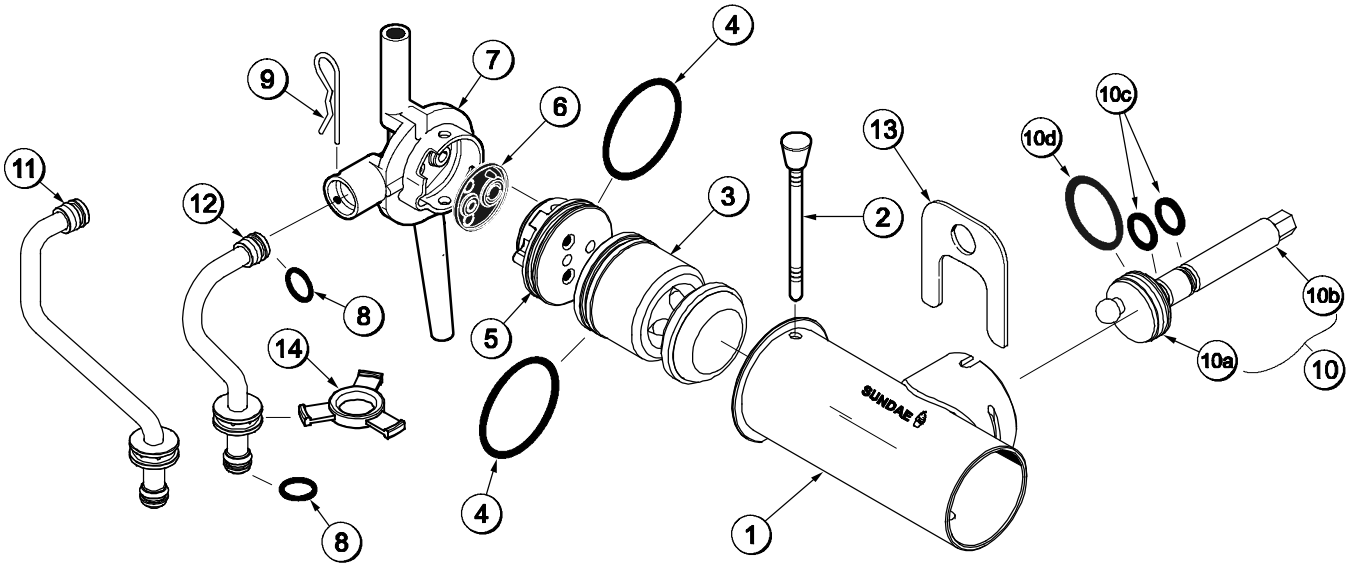

Figure 3

ITEM	DESCRIPTION	PART NO.
1 - 7	**PUMP ASSEMBLY - MIX SIMPLIFIED SOFT SERVE**	**X57029-14***
1	CYLINDER-PUMP-HOPPER-SOFT SERVE	057943
2	PIN A.-RETAINING	X55450
3	PISTON	053526
4	O-RING 2-1/8” OD - RED	020051
5	CAP-VALVE	056874-14*
6	GASKET - SIMPLIFIED PUMP VALVE	053527
7	ADAPTOR - MIX INLET	054825
8	O-RING - 11/16 OD - RED	016132

ITEM	DESCRIPTION	PART NO.
9	PIN - COTTER	044731
10	SHAFT A.-DRIVE-MIX PUMP-HOPPER	X41947
10a	CRANK-DRIVE	039235
10b	SHAFT-DRIVE	041948
10c	O-RING - DRIVE SHAFT	048632
10d	O-RING 1-3/4	008904
11	TUBE A.-FEED-LEFT	X59808
12	TUBE A.-FEED-RIGHT	X59809
13	CLIP-MIX PUMP RETAINER	044641
14	RING-CHECK .120 OD	056524

***NOTE:** THE STANDARD PUMP X57029-XX IS -14. OVERRUN CAN BE CHANGED HIGHER OR LOWER BY SUBSTITUTING THE CAP (056874-XX) WITH CAPS AVAILABLE -1 THROUGH -20. THE HIGHER THE DASH (-) NUMBER, THE HIGHER THE OVERRUN.

Accessories

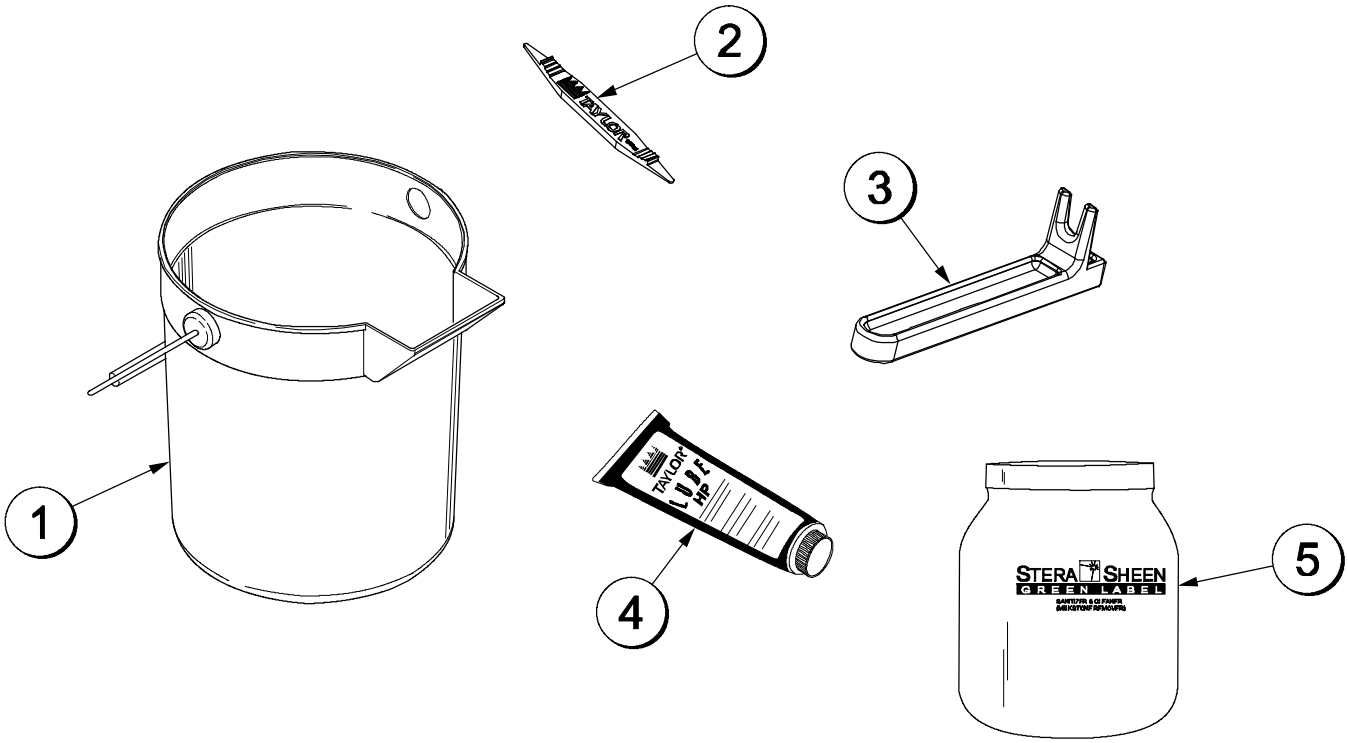

Figure 4

ITEM	DESCRIPTION	PART NO.
1	PAIL-MIX 10 QT.	013163
2	TOOL-O-RING REMOVAL	048260-WHT
3	TOOL-SHAFT-DRIVE-PUMP-HOPPER	057167

ITEM	DESCRIPTION	PART NO.
4	LUBRICANT-TAYLOR	047518
*5	SANITIZER-STERA SHEEN	SEE NOTE
**	KIT A.-TUNE-UP	X49463-81

***Note:** A sample container of sanitizer is sent with the unit. For reorders, order Stera Sheen part no. 055492 (100 packs) or Kay-5 part no. 041082 (125 packs).

**Not Shown

Brushes

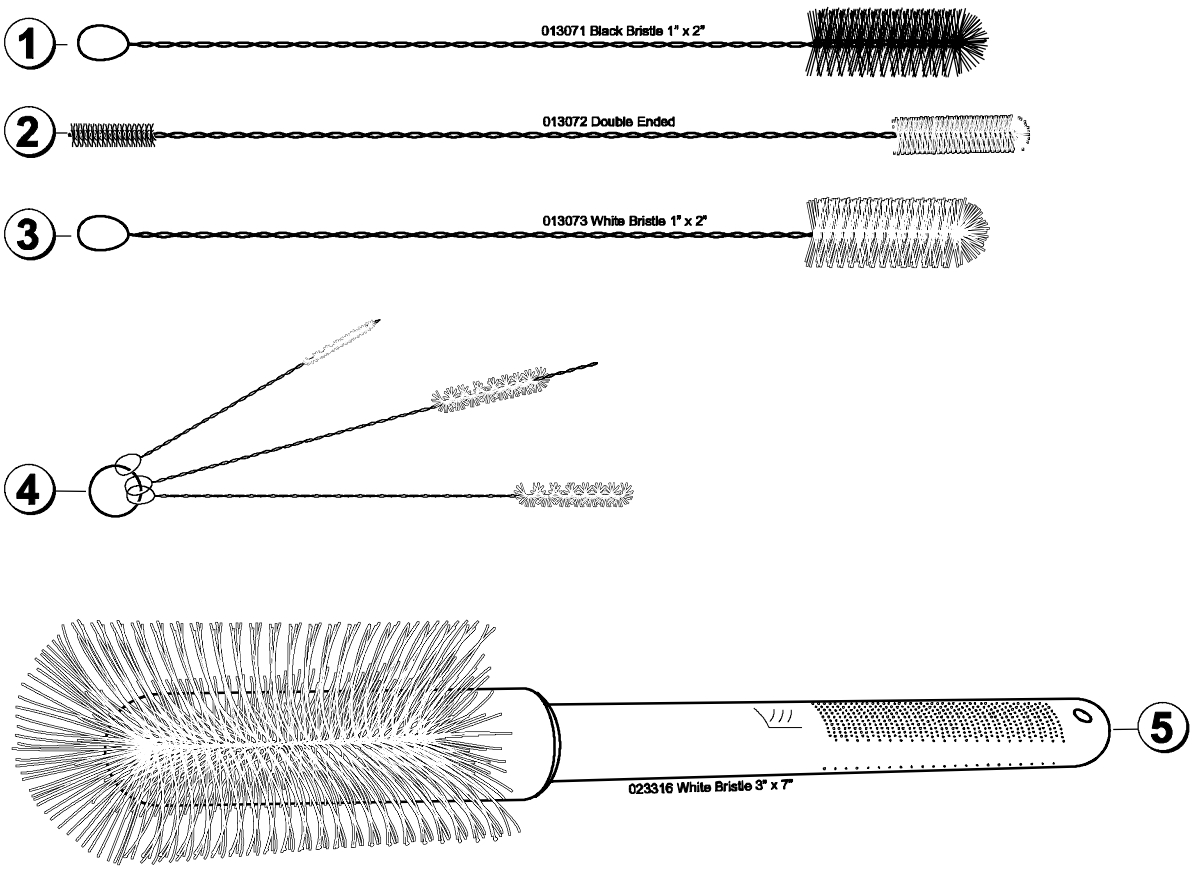

Figure 5

ITEM	DESCRIPTION	PART NO.
1	BLACK BRISTLE BRUSH	013071
2	DOUBLE END BRUSH	013072
3	WHITE BRISTLE BRUSH (1” x 2”)	013073

ITEM	DESCRIPTION	PART NO.
4	BRUSH SET (3)	050103
5	WHITE BRISTLE BRUSH (3” x 7”)	023316

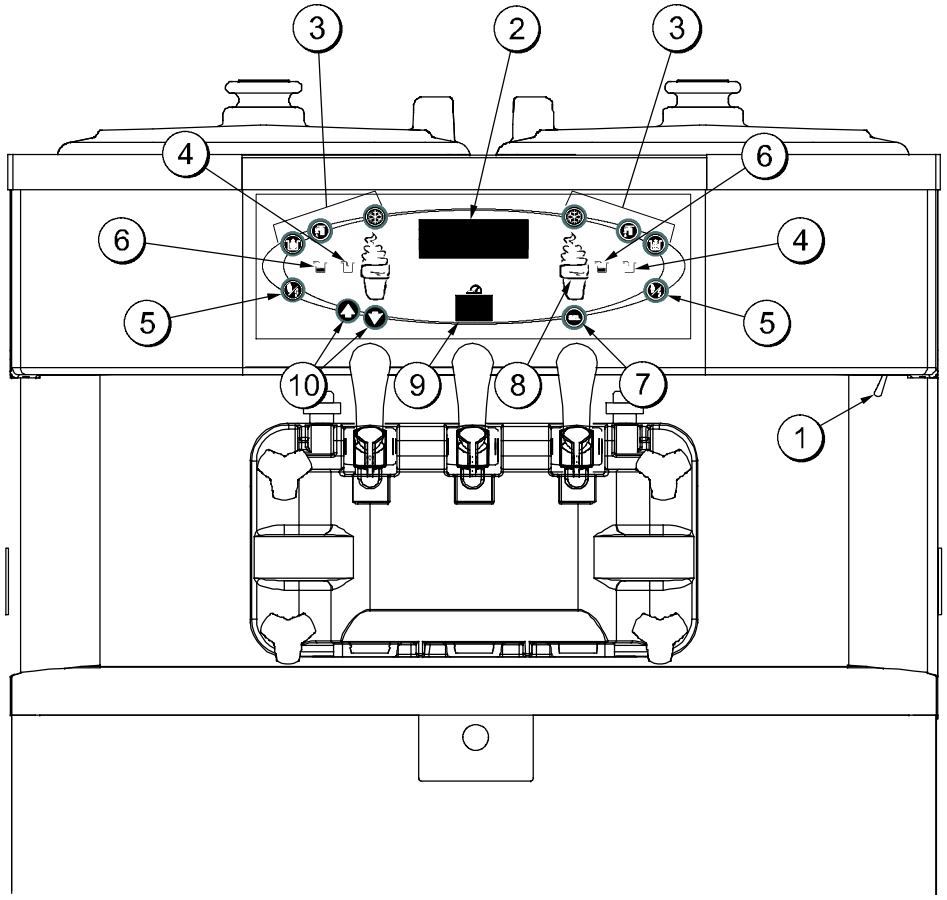

Figure 6

ITEM	DESCRIPTION
1	POWER SWITCH
2	FLUORESCENT DISPLAY
3	KEYPADS
4	MIX OUT INDICATOR
5	STANDBY KEY

ITEM	DESCRIPTION
6	MIX LOW INDICATOR
7	SELECT KEY
8	SERVICE MENU KEY
9	BRUSH CLEAN COUNTER
10	ARROW KEYS

Symbol Definitions

To better communicate in the International arena, symbols have replaced words on many of our operator switches, function, and fault indicators. Your Taylor equipment is designed with these International symbols.

The following chart identifies the symbol definitions.

= SELECT

= ON

= OFF

= UP ARROW

= DOWN ARROW

= AUTO

= WASH

= MIX LOW

= MIX OUT

= MENU DISPLAY

= MIX PUMP

= STANDBY

Power Switch

When placed in the ON position, the power switch allows control panel operation.

Fluorescent Display

The fluorescent display is located on the front control panel. During normal operation the display is blank. The display is used to show menu options and notifies the operator if a fault is detected. On International models, the display will indicate the temperature of the mix in the hopper.

Indicator Lights

MIX LOW - When the MIX LOW symbol is illuminated, the mix hopper has a low supply of mix and should be refilled as soon as possible.

MIX OUT - When the MIX OUT symbol is illuminated, the mix hopper has been almost completely exhausted and has an insufficient supply of mix to operate the freezer. At this time, the AUTO mode is locked out and the freezer will be placed in the STANDBY mode. To initiate the refrigeration system, add mix to the mix hopper and touch the AUTO symbol . The freezer will automatically begin operation.

Standby Symbol

During long “No Sale” periods, the unit can be placed into the Standby mode. This maintains product temperatures below 40°F (4.4°C) in both the hopper and the freezing cylinder, and helps prevent overbeating and product breakdown.

To activate STANDBY, enter the access code for the Manager Menu (see page 16.) When STANDBY is selected, the STANDBY symbol illuminates, indicating the Standby feature has been activated.

To resume normal operation, press the AUTO symbol . When the unit cycles off, the product in the freezing cylinder will be at serving viscosity.

080111

Reset Mechanism

The reset buttons are located in the back panel of the machine. It protects the beater motor from an overload condition. Should an overload occur, the reset mechanism will trip. To properly reset the freezer place the power switch in the OFF position. Press the reset button firmly. Turn the power switch to the ON position. Touch the WASH symbol and observe the freezer's performance.

WARNING: Do not use metal objects to press the reset button. Failure to comply may result in severe personal injury or death.

If the beater motor is turning properly, touch the WASH symbol to cancel the cycle. Touch the AUTO symbol to resume normal operation. If the freezer shuts down again, contact your authorized service technician.

Air/Mix Pump Reset Mechanism

This reset button protects the pump from an overload condition. Should an overload occur, the reset mechanism will trip. To reset the pump, press the reset button firmly.

WARNING: Do not use metal objects to press the reset button. Failure to comply may result in severe personal injury or death.

Adjustable Draw Handle

This unit features an adjustable draw handle to provide the best portion control, giving a better, consistent quality to your product and controlling costs. The draw handle should be adjusted to provide a flow rate of 5 to 7-1/2 oz. (142 to 213 g.) of product by weight per 10 seconds. To INCREASE the flow rate, tighten the screw. To DECREASE the flow rate, loosen the screw. (See Figure 7.)

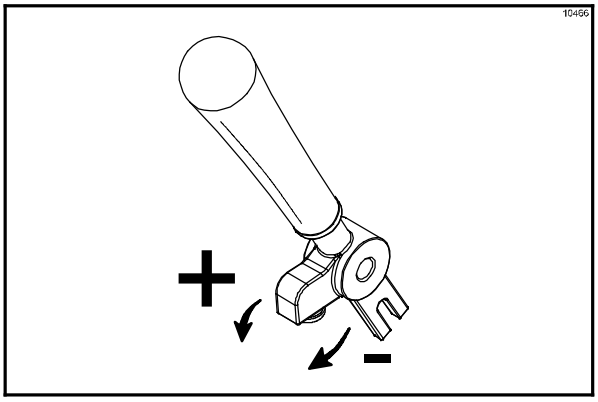

Figure 7

Operating Screen Descriptions

The fluorescent display located in the center of the control panel is normally blank during the daily operation of the machine. The display is activated when the SEL symbol or the Manager's Menu is selected. The display screen will also alert the operator of specific faults detected by the control.

Power Up

When the machine is powered the control system will initialize to perform a system check. The screen will display “INITIALIZING”. There will be four types of data the system will check: LANGUAGE, SYSTEM DATA, CONFIG DATA, and LOCKOUT DATA.

During the INITIALIZING... LANGUAGE screen, the alarm will be on. If the system detects corrupt data during INITIALIZING, the following display will alert the operator that the control settings may have been changed (See Figure 8.)

NVRAM FAULT
RESET TO DEFAULTS
PRESS SEL KEY

Figure 8

See “NVRAM FAULT” for instructions if the above message appears on the screen.

Once the system has initialized, the SAFETY TIMEOUT screen will display and the alarm will be on. (See Figure 9.)

SAFETY TIMEOUT
ANY KEY ABORTS

Figure 9

The SAFETY TIMEOUT screen will be displayed with the alarm on, for 60 seconds or until any control symbol is selected.

After the safety timeout has been completed and the power switch is OFF, the following screen is displayed. (See Figure 10.)

POWER SWITCH OFF
- = - = - = - = - = -
UNIT CLEANED

Figure 10

Power Switch ON

When the power switch is placed in the ON position, the control panel touch keys become operative. The fluorescent display will be either blank or indicate that the unit has been cleaned. (See Figure 11.)

UNIT CLEANED

Figure 11

Brush Clean Counter

The Brush Clean Counter (item 9 on page 13) will display the number of hours since the freezer was last brush cleaned. After hour 99, it will change to a letter and a number (example: A0, A1. . B0, B1, etc.)

Manager's Menu

The Manager's Menu is used to enter the operator function displays. To access the Menu, touch the center of the CONE symbol on the control panel. The arrow symbols, the SEL symbol and the CONE symbol will be lit when the ACCESS CODE screen is displayed. (See Figure 12.)

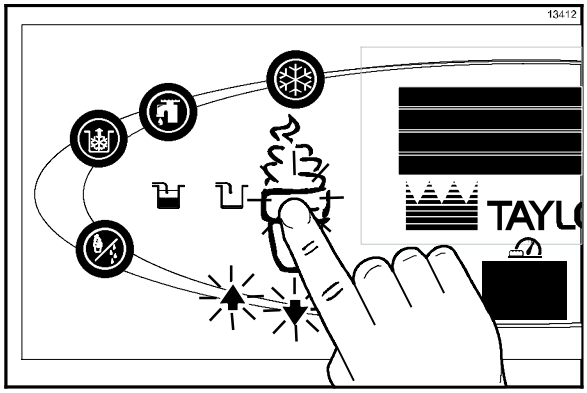

Figure 12

In the Menu program, the arrow symbols and the SEL symbol will function as menu keys.

UP ARROW - increases the value above the cursor and is used to scroll upward in text displays.

DOWN ARROW - decreases the value above the cursor and is used to scroll downward in text displays.

SEL - advances the cursor position to the right and is used to select menu options.

Note: The machine will continue operation in the mode it was in when the Menu was selected. However, the control keys will not be illuminated and are non-functional when the Manager's Menu is displayed.

Entering Access Code

With the ACCESS CODE screen on the display use the SEL symbol to set the first code number in the cursor position. When the correct number is selected, touch the SEL symbol to move the cursor to the next number position. (See Figure 13.)

ENTER ACCESS CODE

8 3 0 9

Figure 13

Continue to enter the proper access code numbers (8309) until all four numbers are displayed, then touch the SEL symbol. The Manager's menu list will display on the screen provided the correct access code is entered.

If an incorrect number is entered for the access code, the display will exit the Menu program when the SEL symbol is selected. (See Figure 14.)

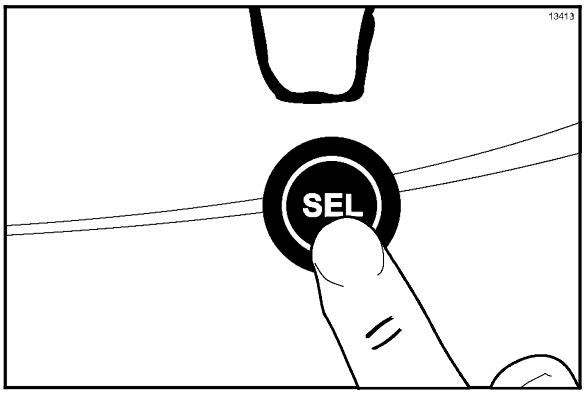

Figure 14

Menu Options

Touch the ARROW symbols to move up or down through the Menu. Select a Menu option by touching the SEL symbol. Exit the Menu program by selecting EXIT FROM MENU or touch the CONE symbol .

The following menu options are listed in the Manager's Menu.

EXIT FROM MENU
RESET DRAW COUNTER
SET CLOCK
AUTO START TIME
STANDBY MODE
MIX LEVEL AUDIBLE
FAULT DESCRIPTION
FAULT HISTORY
SYSTEM INFORMATION

Selecting “EXIT FROM MENU” will exit the Manager's Menu and the return the control panel symbols to normal operation.

The SERVING COUNTER screen is used to check or reset the number of servings dispensed from the machine. The SERVING COUNTER will automatically reset to zero when the machine is brush cleaned. (See Figure 15.)

SERVINGS COUNTER

0 0

> Next

Figure 15

Reset the SERVING COUNTER by selecting the SEL symbol to advance to the next screen. Select the UP arrow symbol to move the arrow (>) to YES and select the SEL symbol. The servings counter will reset to zero and exit back to the Manager's Menu. (See Figure 16.)

```
              RESET DRAW COUNTER

            YES
>           NO
```

Figure 16

The SET CLOCK option allows the Manager to adjust the control clock date and time. The date and time may only be changed after the freezer has been manually cleaned but before it has been placed in the AUTO or STANDBY mode. The following message will be displayed if the SET CLOCK option is selected when the machine is not in a brush clean state. (See Figure 17.)

```
SET CLOCK
12:01              7/15/2004
             NO CHANGES ALLOWED
Press Any Key
```

Figure 17

To change the date or time, select the SET CLOCK option in the menu. Touch the UP arrow symbol to advance the arrow from Exit to Change, then touch the SEL symbol to select the Change option. (See Figure 18.)

```
SET CLOCK
12:01              7/15/2004
 Change
> Exit
```

Figure 18

Change the time by touching the UP arrow with the cursor under the hour position. Move the cursor to the minutes by touching the SEL symbol. Once the correct minutes are entered, touch the SEL symbol to advance the cursor to the month. (See Figure 19.)

```
SET CLOCK
12:01              7/15/2004

> Exit
```

Figure 19

Enter the correct month, day, and year. Then touch the SEL symbol to advance to the DAYLIGHT SAVING TIME screen. (See Figure 20.)

```
              DAYLIGHT SAVING TIME
                    ENABLED
>           Enable
            Disable
```

Figure 20

The Daylight Saving feature when enabled, will automatically adjust the control clock for daylight saving time. To Disable the Daylight Saving Time feature, select the UP arrow to move the arrow to Disable. Then touch the SEL symbol to save the new setting.

The AUTO START TIME option allows the Manager to set the time of day at which the machine automatically enters the AUTO mode from the STANDBY mode. The machine must be in the STANDBY mode in order to AUTO start at the programmable time. The AUTO START TIME can also be Disabled and require starting the AUTO mode manually. (See Figure 21.)

```
              AUTO START TIME
                   DISABLED
            Enable
>           Disable
```

Figure 21

Enable the AUTO START TIME by selecting the UP arrow symbol to move the arrow up to Enable. Touch the SEL symbol to advance to the next screen. (See Figure 22.)

```
                AUTO START TIME
                      00:00
          Change
>         Exit
```

Figure 22

Program the AUTO START TIME by selecting the UP arrow symbol to move the arrow to Change. Touch the SEL symbol to advance to the next screen. (See Figure 23.)

```
                AUTO START TIME
                      00:00
```

Figure 23

Use the arrow symbols to program the AUTO START TIME by increasing or decreasing the hour setting above the cursor. Touch the SEL symbol to advance the cursor and program the minutes setting. Select the SEL symbol to return to the previous screen with the new time setting displayed. Select the SEL symbol to exit the screen and return to the Menu.

The STANDBY option is used to manually place either side of the machine in the Standby mode during long, no draw periods. Select the STANDBY screen from the Menu. Touch the SEL symbol to activate Standby.

Discontinue Standby operation by exiting the Manager's Menu and select the AUTO mode. (See Figure 24.)

```
                STANDBY MODE

>         EXIT
```

Figure 24

The MIX LEVEL AUDIBLE option when enabled will alert the operator with an audible tone when there is mix low or mix out condition. The following screen is displayed upon selecting this option. (See Figure 25.)

```
                MIX LEVEL AUDIBLE

>         Enable
          Disable
```

Figure 25

Disable the audible tone feature by selecting the UP arrow symbol to move the arrow to Disable. Select the SEL symbol to save the new setting and return to the Menu. The control panel icons for Mix Low and Mix Out will light as the mix level drops in the hopper but the audible tone will be disabled.

The FAULT DESCRIPTION display will indicate if there is a fault with the freezer. When no faults are detected the following screen will be displayed. (See Figure 26.)

```
FAULT DESCRIPTION
NO FAULT FOUND
```

Figure 26

Touch the SEL symbol to display the next fault found or return to the Menu if no other faults exist. Touching the SEL symbol any time faults are displayed will clear the faults if corrected, upon returning to the Menu screen.

Listed below are the variable messages which will appear, along with an explanation for the corrective action.

NO FAULT FOUND - There was no fault found in the freezer. Nothing will appear on the screen after this variable message appears.

BEATER OVERLOAD - Place the power switch in the OFF position. Wait 5 minutes for the machine to cool. Press the beater reset button firmly. Place the power switch in the ON position and restart in AUTO.

HPCO COMPRESSOR - Place the power switch in the OFF position. Wait 5 minutes for the machine to cool. Place the power switch in the ON position and restart in AUTO.

HOPPER THERMISTOR BAD - Place the power switch in the OFF position. Call service technician.

BARREL THERMISTOR BAD - Place the power switch in the OFF position. Call service technician.

The FAULT HISTORY screen displays a history of the faults. (See Figure 27.)

```
FAULT HISTORY
07/27/04                                12:58
<        HPR THERM FAIL
>        EXIT
```

Figure 27

Use the arrow symbols to advance forward or backward to view each screen. Listed below are the variable messages that may appear.

Faults Occurring While in AUTO Mode

HPR>41F (5C) AFTER 4 HR - The mix temperature in the hopper was above 41°F (5°C) more than four hours.

BRL>41F (5C) AFTER 4 HR - The mix temperature in the freezing cylinder was above 41°F (5°C) more than four hours.

HPR>41F (5C) AFTER PF - The mix temperature in the hopper was above 41°F (5°C) more than four hours following a power failure.

BRL>41F (5C) AFTER PF - The mix temperature in the freezing cylinder was above 41°F (5°C) more than four hours following a power failure.

HPR>45F (7C) AFTER 1 HR - The mix temperature in the hopper was above 45°F (7°C) more than one hour.

BRL>45F (7C) AFTER 1 HR - The mix temperature in the freezing cylinder was above 45°F (7°C) more than one hour.

HPR>59F (15C) - The mix temperature in the hopper exceeded 59°F (15°C).

BRL>59F (15C) - The mix temperature in the freezing cylinder exceeded 59°F (15°C).

Note: Refer to your local health codes regarding temperature recommendations for procedures to follow if these fault screens appear.

The SYSTEM INFORMATION is displayed on three separate screens. The first screen contains the control and software version installed in the machine. (See Figure 28.)

```
SOFTWARE VERSION
C712 CONTROL UVC3
VERSION 1.04
> Next
```

Figure 28

Touch the SEL symbol to advance to the next system information screen containing the software language version. (See Figure 29.)

```
Language
V1.11 r 00 English 515

> Next
```

Figure 29

Touch the SEL symbol to advance to the third system information screen containing the model bill of material and machine serial number. Touching the SEL symbol again will return to the Menu list. (See Figure 30.)

```
B.O.M.  C71233C000
S/N     K0000000

> Next
```

Figure 30

070322

The C712 machine stores mix in a hopper. It has two 3.4 quart (3.2 liter) capacity freezing cylinders with a three spout door.

We begin our instructions at the point where we enter the store in the morning and find the parts disassembled and laid out to air dry from the previous night's cleaning.

These opening procedures will show you how to assemble these parts into the freezer, sanitize them, and prime the freezer with fresh mix in preparation to serve your first portion.

If you are disassembling the machine for the first time or need information to get to this starting point in our instructions, turn to page 32, “Disassembly”, and start there.

Freezing Cylinder Assembly

Note: When lubricating parts, use an approved food grade lubricant (example: Taylor Lube).

MAKE SURE THE POWER SWITCH IS IN THE “OFF” POSITION! Failure to follow this instruction may result in severe personal injury from hazardous moving parts.

Step 1
Before installing the beater drive shaft, lubricate the groove on the beater drive shaft.

Step 2
Slide the beater drive shaft boot seal over the small end of the beater drive shaft and engage into the groove on the shaft.

Step 3
Heavily lubricate the inside portion of the boot seal and also lubricate the flat end of the boot seal that comes in contact with the rear shell bearing.

Step 4
Apply an even coat of lubricant to the shaft. DO NOT lubricate the hex end. (See Figure 31.)

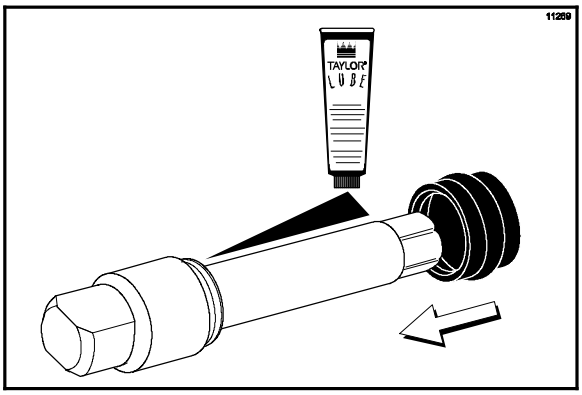

Figure 31

Note: To ensure the mix does not leak out of the back of the freezing cylinder, the middle section of the boot seal should be convex or extend out from the seal. If the middle section of the boot seal is concave or extending into the middle of the seal, turn the seal inside out.

Step 5
Insert the beater drive shaft through the rear shell bearing in the freezing cylinder and engage the hex end firmly into the drive coupling. (See Figure 32.)

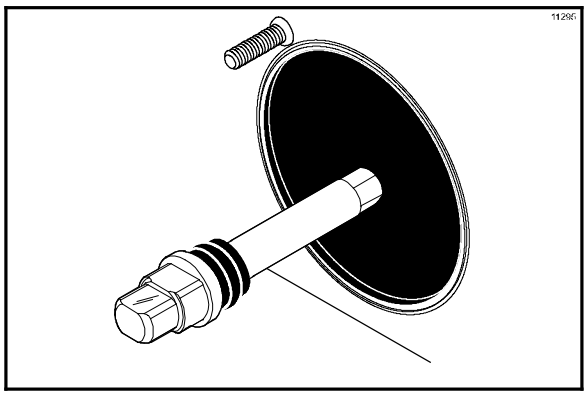

Figure 32

USE EXTREME CAUTION when handling the beater assembly. The scraper blades are very sharp and may cause injury.

Step 6
Before installing the beater assembly, check the scraper blades for any nicks or signs of wear. If any nicks are present, or if the blades are worn, replace both blades.

If the blades are in good condition, install the scraper blade clips over the scraper blades. Place the rear scraper blade over the rear holding pin on the beater. (See Figure 33.)

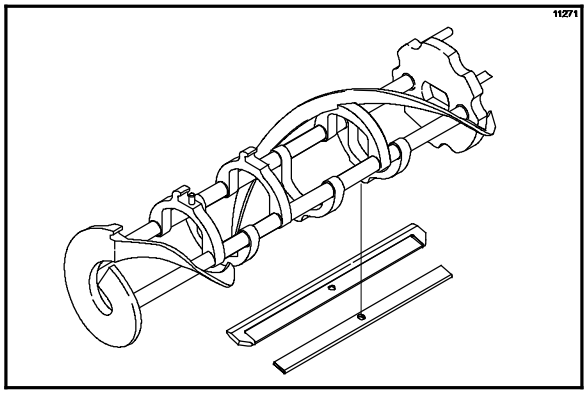

Figure 33

Note: Scraper blades should be replaced every 3 months.

Note: The hole on the scraper blade must fit securely over the pin to prevent costly damage.

Step 7
Holding the rear blade on the beater, slide it into the freezing cylinder halfway. Install the front scraper blade over the front holding pin. (See Figure 34.)

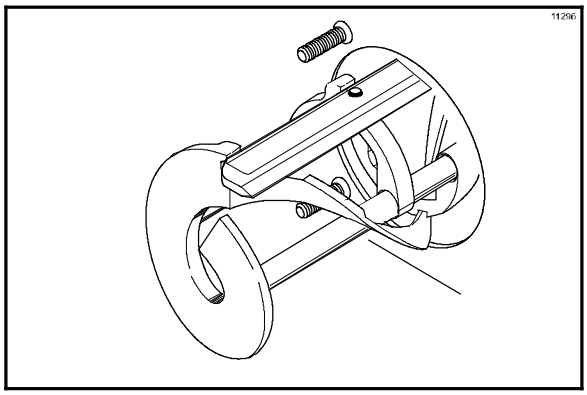

Figure 34

Step 8
Install the beater shoes. (See Figure 35.)

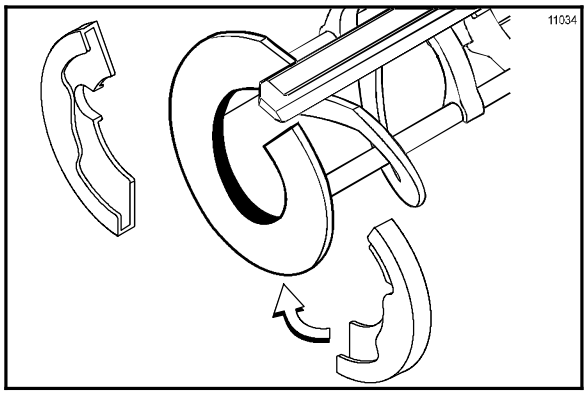

Figure 35

Step 9
Slide the beater assembly the rest of the way into the freezing cylinder.

Make sure the beater assembly is in position over the drive shaft by turning the beater slightly until the beater is properly seated. When in position, the beater will not protrude beyond the front of the freezing cylinder. (See Figure 36.)

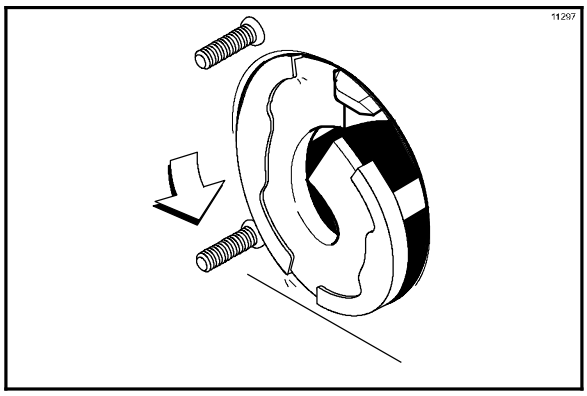

Figure 36

Repeat these steps for the other side of the machine.

Step 10
To assemble the freezer door, place the door gaskets into the grooves on the back of the freezer door.

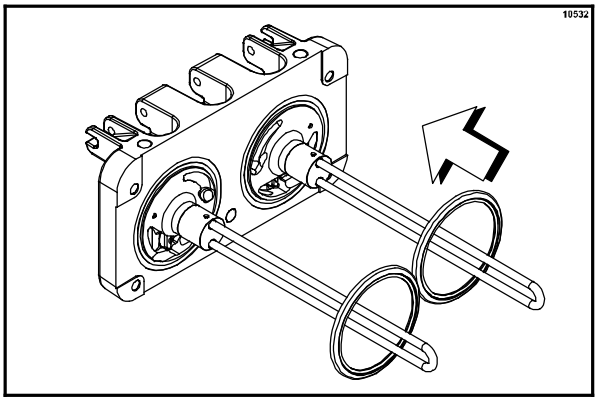

Figure 37

Slide the front bearings over the baffle rods. The flanged edges should be against the door. **DO NOT lubricate the gaskets or front bearings.**

Slide the two o-rings into the grooves on each prime plug. Apply an even coat of Taylor Lube to the o-rings and shafts.

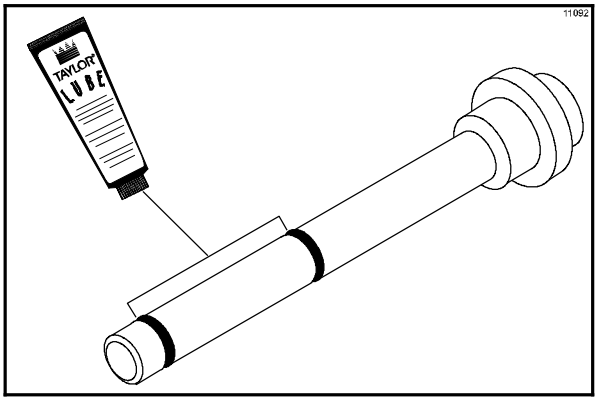

Figure 38

Step 11
Insert the prime plugs into the holes in the top of the freezer door, and push down.

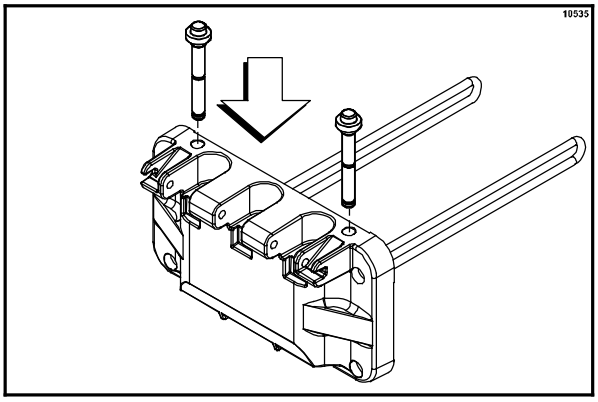

Figure 39

Step 12
To install the freezer door, insert the baffle rods through the beaters in the freezing cylinders.

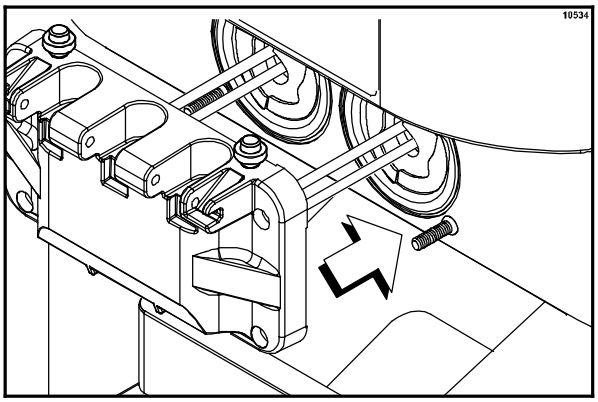

Figure 40

With the door seated on the freezer studs, install the handscrews. Use the long handscrews on the top and the short handscrews on the bottom. Tighten them equally in a criss-cross pattern to insure the door is snug.

Step 13
Slide the three o-rings into the grooves of each standard draw valve. Slide the H-ring and o-ring into the grooves of the center draw valve. Lubricate the H-ring and o-rings.

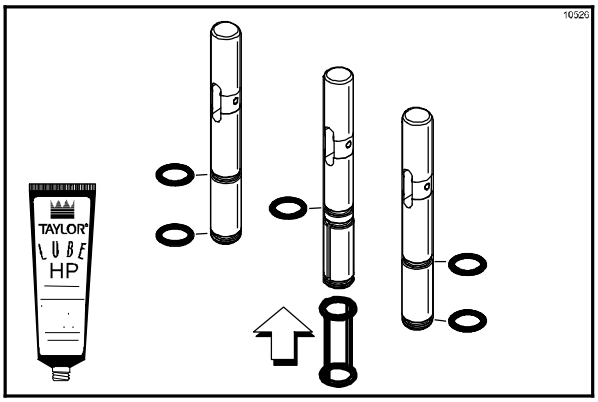

Figure 41

Step 14
Lubricate the inside of the freezer door spouts, top and bottom.

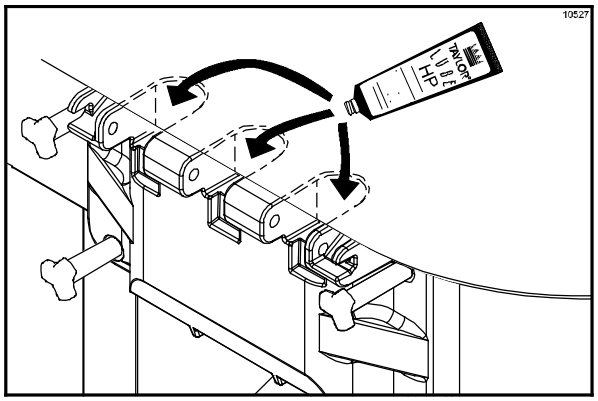

Figure 42

Step 15
Insert the draw valves from the bottom until the slot in each draw valve comes into view.

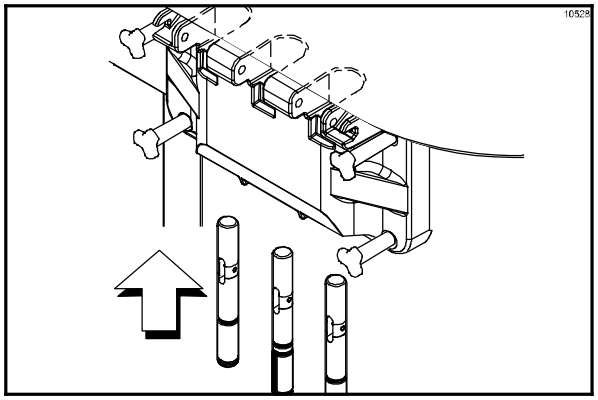

Figure 43

Step 16
Position each draw handle with the adjustment screw facing down. Slide the fork of each draw handle into the slot of each draw valve, starting from the right.

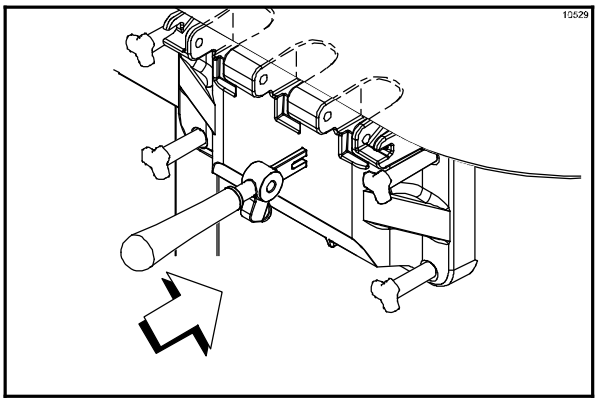

Figure 44

Step 17
Slide the pivot pin through the draw handles as the handles are inserted into the draw valves.

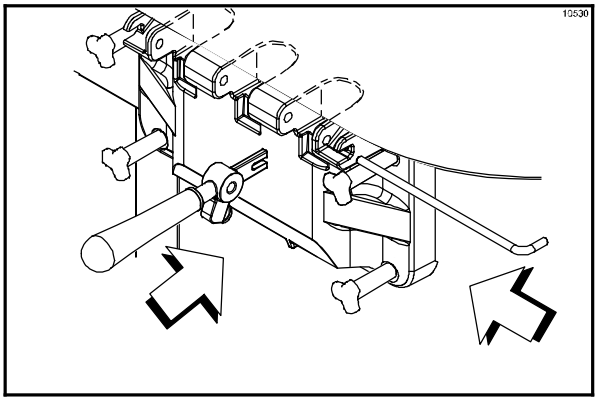

Figure 45

Note: This freezer features three adjustable draw handles to provide portion control, giving a better consistent quality to your product and controlling costs. The draw handle should be adjusted to provide a flow rate of 5 to 7-1/2 oz. (142 g. to 213 g.) of product by weight per 10 seconds.

To INCREASE the flow rate, tighten the screw. To DECREASE the flow rate, loosen the screw.

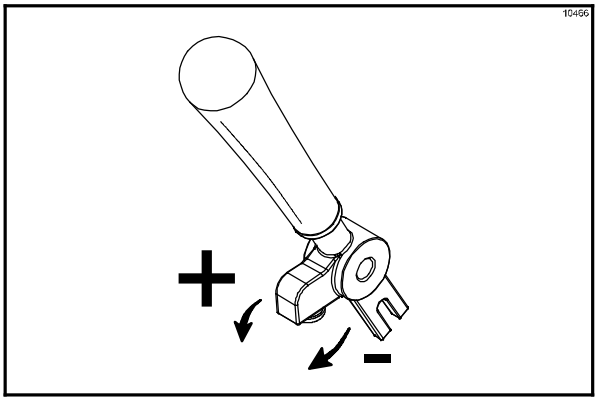

Figure 46

Step 18
Snap the design caps over the bottom of the door spouts.

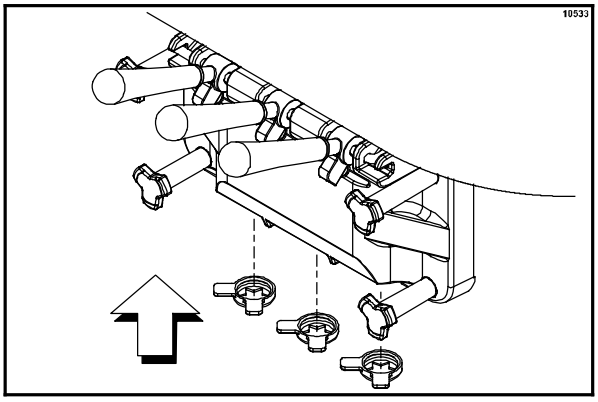

Figure 47

Step 19
Slide the two rear drip pans into the holes in the back panel. Slide the two drip pans into the holes in the side panels. (See Figure 48.)

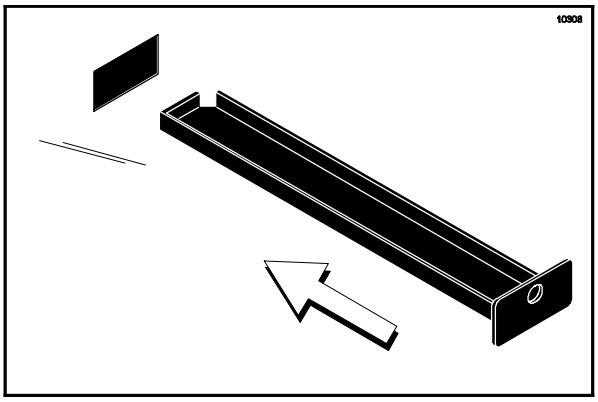

Figure 48

Step 20
Install the front drip tray and splash shield under the door spouts. (See Figure 49.)

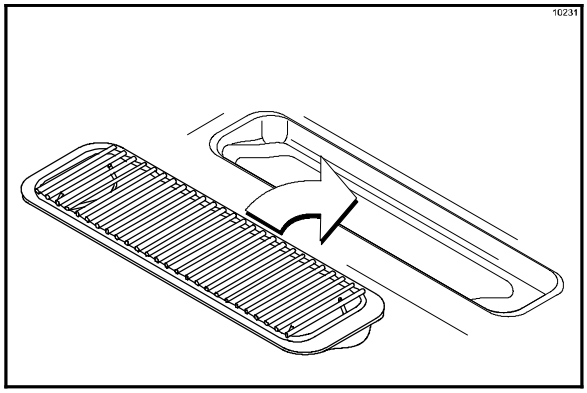

Figure 49

Mix Pump Assembly

Step 1
Inspect the rubber pump parts. O-rings and gasket must be in 100% good condition for the pump and entire machine to operate properly. The o-rings and gasket cannot properly serve their intended function if nicks, cuts, or holes in the material are present.

Replace any defective parts immediately and discard the old.

Step 2
Assemble the piston. Slide the red o-ring into the groove of the piston. DO NOT lubricate the o-ring. (See Figure 50.)

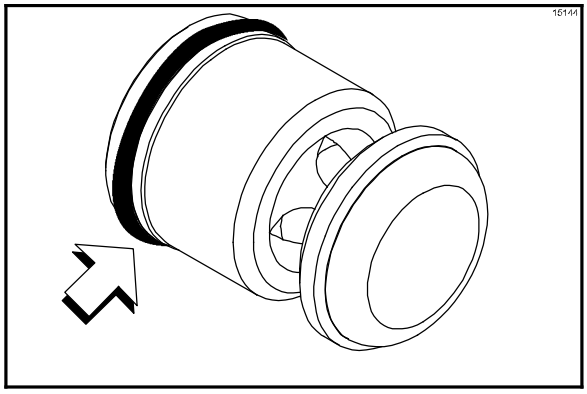

Figure 50

Step 3
Apply a thin layer of lubricant to the inside of the pump cylinder at the retaining pin hole end. (See Figure 51.)

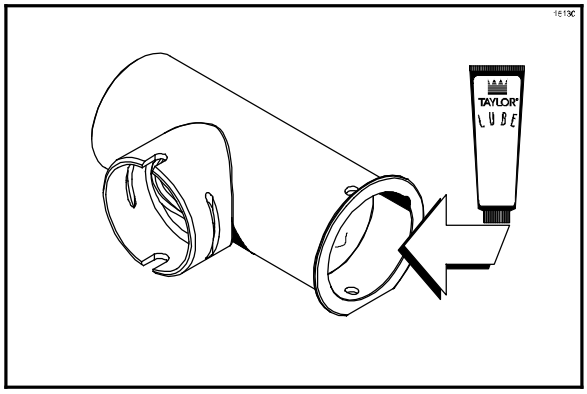

Figure 51

Step 4
Insert the piston into the retaining pin hole end of the pump cylinder. (See Figure 52.)

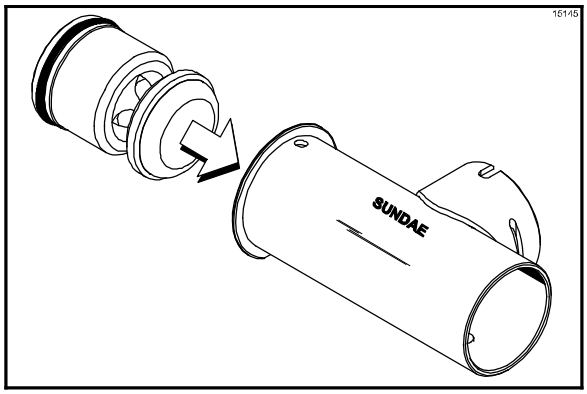

Figure 52

Step 5
Assemble the valve cap. Slide the o-ring into the groove of the valve cap. DO NOT lubricate the o-ring. (See Figure 53.)

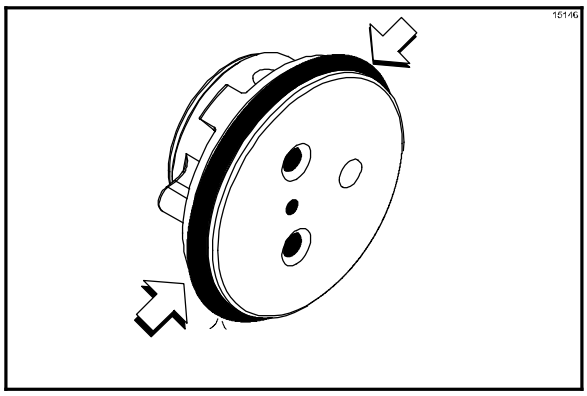

Figure 53

Step 6
Slide the pump valve gasket into the holes on the cap. DO NOT lubricate the gasket. (See Figure 54.)

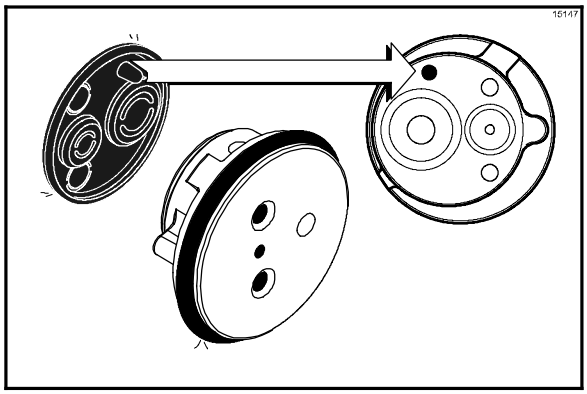

Figure 54

Step 7
Insert the valve body cap into the hole in the mix inlet adapter. (See Figure 55.)

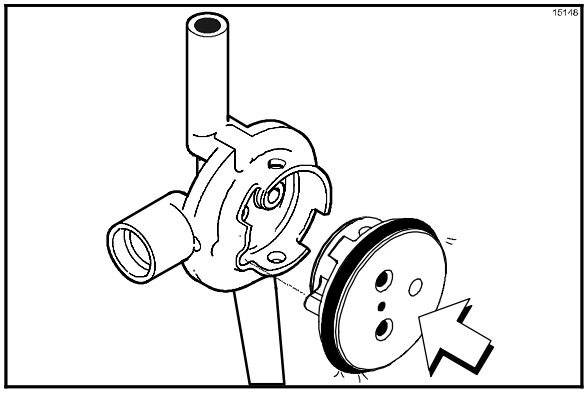

Figure 55

Step 8
Insert the mix inlet assembly into the pump cylinder. (See Figure 56.)

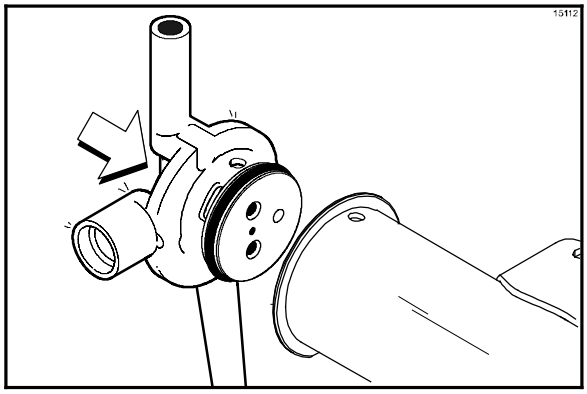

Figure 56

The adapter must be positioned into the notch located at the end of the pump cylinder.

Step 9
Secure the pump parts in position by sliding the retaining pin through the cross holes located at one end of the pump cylinder. (See Figure 57.)

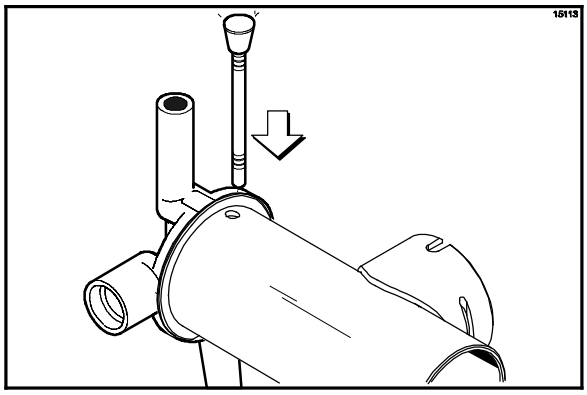

Figure 57

Note: The head of the retaining pin should be located at the top of the pump when installed.

Step 10
Assemble the feed tube assembly. Slide the check ring into the groove of the feed tube.
(See Figure 58.)

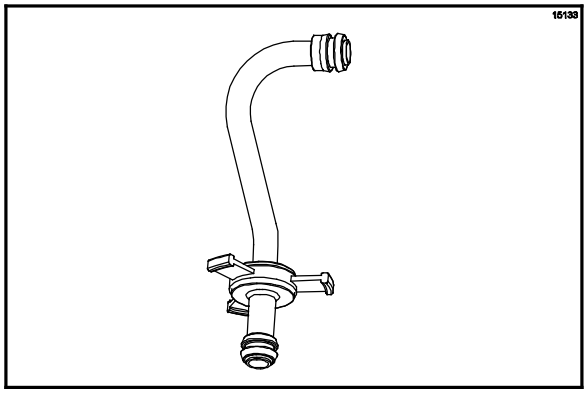

Figure 58

Step 11
Install one red o-ring on each end of the mix feed tube, and thoroughly lubricate. (See Figure 59.)

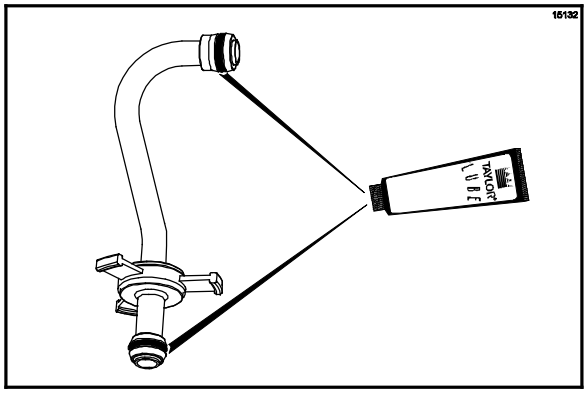

Figure 59

Step 12
Lay the pump assembly, pump clip, cotter pin, and mix feed tube in the bottom of the mix hopper for sanitizing.

Step 13
Slide the large black o-ring and the two smaller black o-rings into the grooves on the drive shaft. Thoroughly lubricate the o-rings and shaft. DO NOT lubricate the hex end of the shaft. (See Figure 60.)

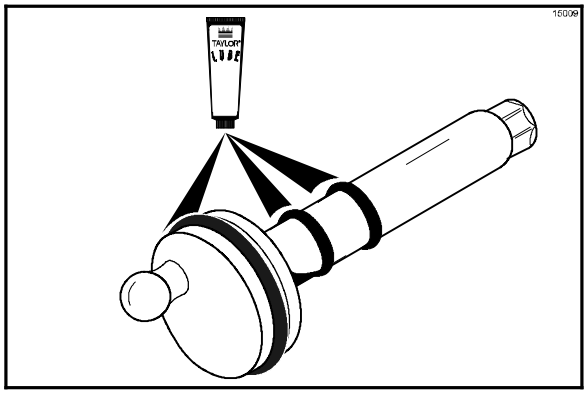

Figure 60

Step 14
Install the hex end of the drive shaft into the drive hub at the rear wall of the mix hopper.
(See Figure 61.)

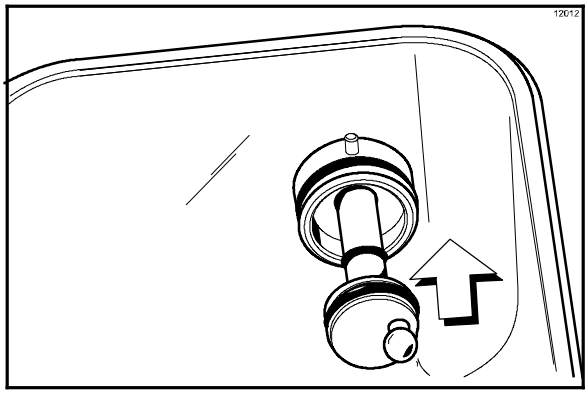

Figure 61

Note: For ease in installing the pump, position the ball crank of the drive shaft in the 3 o'clock position.

Repeat these steps for the other side of the machine.

Sanitizing

Step 1
Prepare a pail of approved 100 PPM sanitizing solution (examples: 2-1/2 gal. [9.5 liters] of Kay-5® or 2 gal. [7.6 liters] of Stera-Sheen®). USE WARM WATER AND FOLLOW THE MANUFACTURER'S SPECIFICATIONS.

Step 2
Pour sanitizing solution over all the parts in the bottom of the mix hopper and allow it to flow into the freezing cylinder. (See Figure 62.)

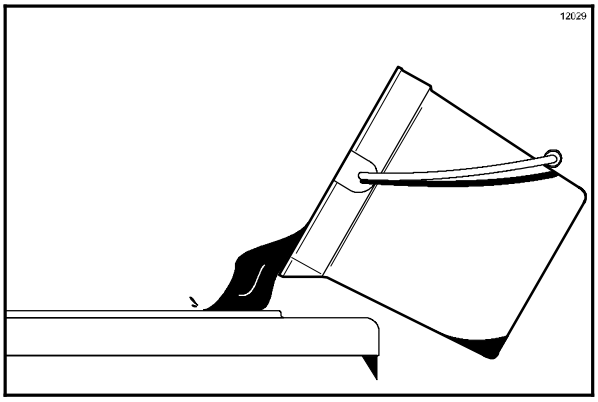

Figure 62

080908

Note: You have just sanitized the mix hopper and parts; therefore, be sure your hands are clean and sanitized before going on in these instructions.

Step 3
While the solution is flowing into the freezing cylinder, take particular care to brush-clean the mix level sensing probe, the mix hopper, the mix inlet hole, the air/mix pump, the pump clip, the mix feed tube, and the cotter pin.

Step 4
Install the pump assembly at the rear of the mix hopper. To position the pump on the drive hub, align the drive hole in the piston with the drive crank of the drive shaft. Secure the pump in place by slipping the pump clip over the collar of the pump, making sure the clip fits into the grooves in the collar. (See Figure 63.)

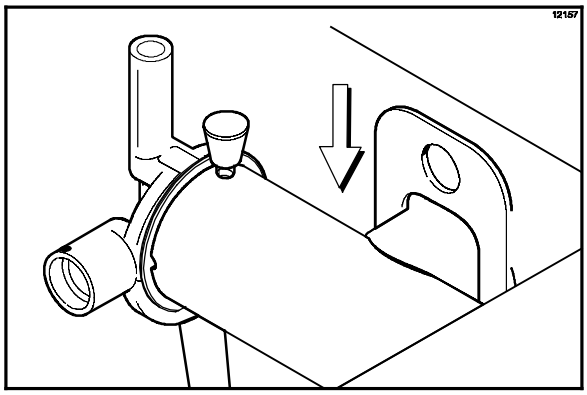

Figure 63

Step 5

Install the pump end of the mix feed tube and secure with the cotter pin. Failure to follow this instruction could result in sanitizer spraying on the operator. (See Figure 64.)

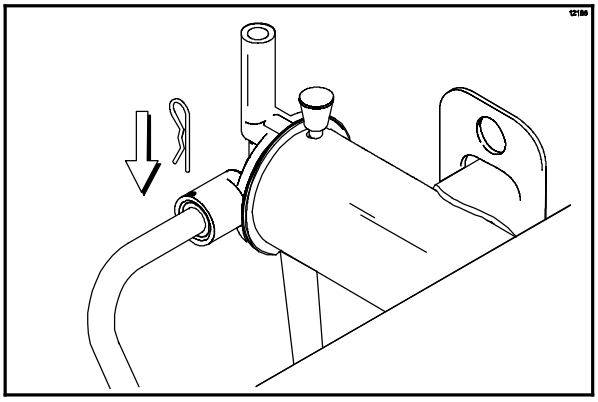

Figure 64

Step 6
Prepare another pail of approved 100 PPM sanitizing solution (examples: 2-1/2 gal. [9.5 liters] of Kay-5® or 2 gal. [7.6 liters] of Stera-Sheen®). USE WARM WATER AND FOLLOW THE MANUFACTURER'S SPECIFICATIONS.

Step 7
Pour the sanitizing solution into the mix hopper.

Step 8
Brush the exposed sides of the hopper.

Step 9
Place the power switch in the ON position.

Step 10
Touch the WASH symbol . This will cause the sanitizing solution in the freezing cylinder to be agitated. Wait at least 5 minutes before proceeding with these instructions.

Step 11
With an empty pail beneath the door spouts, raise the prime plug and touch the PUMP symbol .

Step 12
When a steady stream of sanitizing solution is flowing from the prime plug opening in the bottom of the freezer door, open the draw valve. Momentarily open the center draw valve to sanitize the center door spout. Draw off the remaining sanitizing solution.

Step 13
Once the sanitizer stops flowing from the door spout, touch the WASH and PUMP symbols and close the draw valve.

Repeat these steps for the other side of the machine.

Note: Be sure your hands are clean and sanitized before going on in these instructions.

Priming

Note: Use only FRESH MIX when priming the freezer.

Step 1
Place an empty mix pail beneath the door spouts. With the prime plug in the UP position, pour 2-1/2 gallons (9.5 liters) of FRESH mix into the mix hopper and allow it to flow into the freezing cylinder.

Step 2
Open the draw valve to remove all sanitizing solution. When only fresh mix is flowing, close the draw valve.

Step 3
Once a steady stream of mix starts to flow from the prime plug opening in the bottom of the freezer door, push the prime plug down.

Step 4
When mix stops bubbling down into the freezing cylinder, remove the cotter pin from the outlet fitting of the mix pump. Insert the outlet end of the mix feed tube into the mix inlet hole in the mix hopper. Place the inlet end of the mix feed tube into the outlet fitting of the mix pump. Secure with cotter pin.

Step 5
Select the AUTO symbol .

Note: The brush clean counter will start at this time.

Step 6
Fill the hopper with fresh mix and place the mix hopper cover in position.

Repeat these steps for the other side of the machine.

Manual Brush Cleaning

This Procedure Must Be Completed Every Day

ALWAYS FOLLOW LOCAL HEALTH CODES.

To disassemble the Model C712, the following items will be needed:

- Two cleaning and sanitizing pails
- Sanitizer/Cleaner
- Necessary brushes (provided with freezer)
- Single service towels

Draining Product From The Freezing Cylinder

Step 1
With a pail beneath the door spouts, open the draw valve. Touch the WASH and PUMP symbols .

IMPORTANT! DO NOT allow the pump to keep running when the draw valve is closed. Excessive pressure will build up causing product to spurt out when the draw valve is opened.

Drain the product from the freezing cylinder and the mix hopper.

Step 2
When the flow of product stops, touch the WASH and PUMP symbols , cancelling the WASH and PUMP modes. Close the draw valve and push the prime plug down.

Step 3
Remove the cotter pin, mix feed tube, pump clip and the assembled air/mix pump.

Repeat these steps for the other side of the machine.

Rinsing

Step 1
Pour two gallons (7.6 liters) of cool, clean water into the mix hopper. With the white hopper brush, scrub the mix hopper and the mix level sensing probe. Using the double ended brush, brush clean the mix inlet hole. (See Figure 65.)

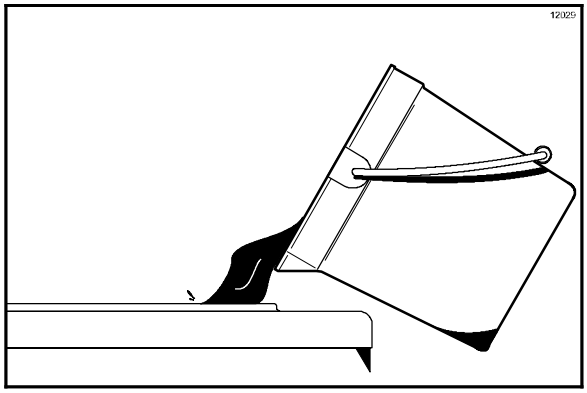

Figure 65

Note: Do not brush clean the mix inlet hole while the machine is in the WASH mode.

Step 2
With a mix pail beneath the door spouts, raise the prime plug and touch the WASH symbol .

Step 3
When a steady stream of rinse water is flowing from the prime plug opening in the bottom of the freezer door, open the draw valve. Drain all the rinse water from the door spout. Close the draw valve and push the prime plug down.

Step 4
Touch the WASH symbol, cancelling the Wash mode.

Step 5
Repeat this procedure using clean, warm water, until the water being discharged is clear.

Repeat these steps for the other side of the machine.

Hopper Cleaning

Step 1
Prepare a pail of approved 100 PPM cleaning solution (examples: 2-1/2 gal. [9.5 liters] of Kay-5® or 2 gal. [7.6 liters] of Stera-Sheen®). USE WARM WATER AND FOLLOW THE MANUFACTURER'S SPECIFICATIONS.

Step 2
With the prime plug pushed down, pour the cleaning solution into the hopper. Allow the solution to flow into the freezing cylinder.

Step 3
Using the white hopper brush, clean the mix hopper and the mix level sensing probes. Using the double ended brush, clean the mix inlet hole. (**Note:** Do not brush clean the mix inlet hole while the machine is in the Wash mode.)

Step 4
Touch the WASH symbol . This will cause the cleaning solution in the freezing cylinder to come in contact with all areas of the freezing cylinder. Wait at least 5 minutes before proceeding with these instructions.

Step 5
Place an empty pail beneath the door spouts.

Step 6
Raise the prime plug.

Step 7
When a steady stream of cleaning solution is flowing from the prime plug opening in the bottom of the freezer door, open the draw valve. Draw off all the solution.

Step 8
Once the cleaning solution stops flowing from the door spout, close the draw valve and the prime plug.

Step 9
Touch the WASH symbol , cancelling the Wash mode.

Repeat these steps on the other side of the machine.

Disassembly

MAKE SURE THE POWER SWITCH IS IN THE "OFF" POSITION! Failure to follow this instruction may result in severe personal injury from hazardous moving parts.

Step 1
Remove the handscrews, freezer door, beater and scraper blades, and drive shaft with drive shaft seal from the freezing cylinder.

Step 2
Remove the scraper blade clips from the scraper blades.

Step 3
Remove the drive shaft seal from each drive shaft.

Step 4
From each pump cylinder, remove the retaining pin, mix inlet adaptor, valve cap, pump gasket, and the piston. Remove the o-ring from the piston and valve cap.

Step 5
Remove the freezer door gaskets, front bearings, pivot pin, draw handles, draw valves, prime plugs, and design caps. Remove the o-rings from the draw valves.

Step 6
Remove the pump drive shafts from the drive hubs in the rear wall of the mix hoppers. (See Figure 66.)

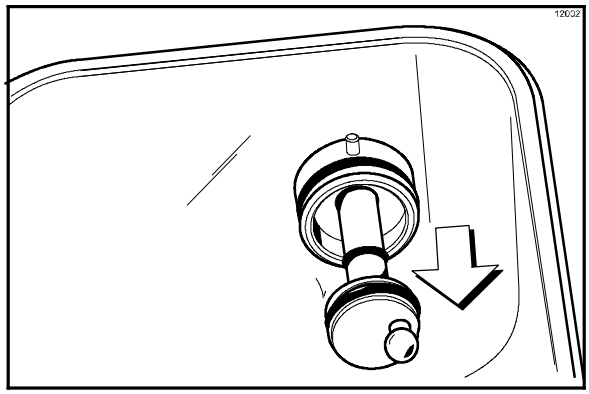

Figure 66

Step 7
Remove the two small o-rings and one large o-ring from each pump drive shaft.

Step 8
Remove the front drip tray and splash shield.

Step 9
Remove all drip pans. Take them to the sink for cleaning. (See Figure 67.)

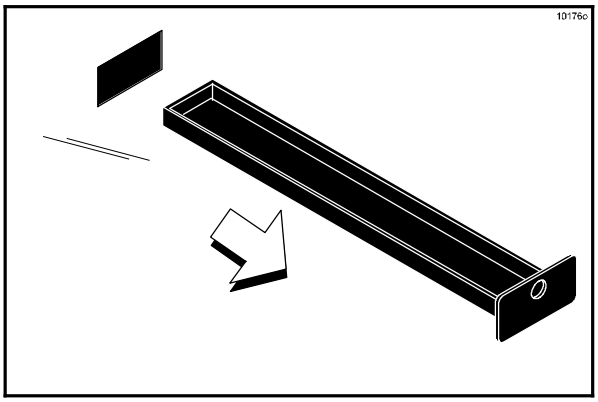

Figure 67

Note: If the drip pans are filled with an excessive amount of mix, it is an indication that the drive shaft seal(s), or o-ring(s) should be replaced or properly lubricated.

Brush Cleaning

Step 1
Prepare a sink with an approved 100 PPM cleaning/ sanitizing solution (examples: Kay-5® or Stera-Sheen®). USE WARM WATER AND FOLLOW THE MANUFACTURER'S SPECIFICATIONS. Make sure all brushes provided with the freezer are available for brush cleaning.

Step 2
Thoroughly brush clean all disassembled parts in the cleaning solution, making sure all lubricant and mix film is removed. Be sure to brush all surfaces and holes, especially the holes in the pump components and the draw valve holes in the freezer door.

Rinse all parts with clean, warm water. Place the parts on a clean, dry surface to air dry overnight.

Step 3
Return to the freezer with a small amount of cleaning solution. Using the black brush, clean the rear shell bearing at the back of each freezing cylinder. (See Figure 68.)

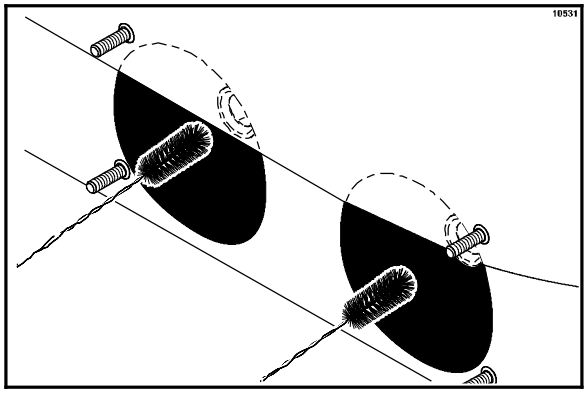

Figure 68

Step 4
Using the black brush, clean the drive hub opening in the rear wall of each mix hopper. (See Figure 69.)

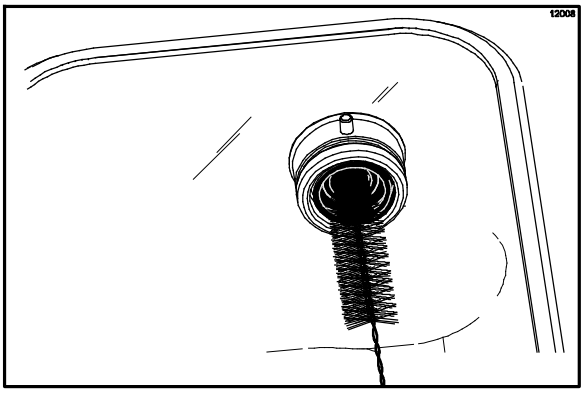

Figure 69

Step 5
Wipe all exterior surfaces of the freezer with a clean, sanitized towel.

Note: The brush clean counter will reset to zero at this time.

Section 7 Important: Operator Checklist

During Cleaning and Sanitizing

ALWAYS FOLLOW LOCAL HEALTH CODES.

Cleaning and sanitizing schedules are governed by federal, state, or local regulatory agencies, and must be followed accordingly. If the unit has a "Standby mode", it must not be used in lieu of proper cleaning and sanitizing procedures and frequencies set forth by the ruling health authority. The following check points should be stressed during the cleaning and sanitizing operations.

CLEANING AND SANITIZING MUST BE PERFORMED DAILY.

Troubleshooting Bacterial Count

☐ 1. Thoroughly clean and sanitize the machine regularly, including complete disassembly and brush cleaning.

☐ 2. Use all brushes supplied for thorough cleaning. The brushes are specially designed to reach all mix passageways.

☐ 3. Use the white bristle brush to clean the mix inlet hole which extends from the mix hopper down to the rear of the freezing cylinder.

☐ 4. Use the black bristle brush to thoroughly clean the rear shell bearing located at the rear of the freezing cylinder and the drive hub opening in the rear wall of the mix hopper. Be sure there is a generous amount of cleaning solution on the brush.

☐ 5. Properly prepare the cleaning and sanitizing solutions. Read and follow the label directions carefully. Too strong of a solution may damage the parts and too weak of a solution will not do an adequate job of cleaning or sanitizing.

☐ 6. The temperature of mix in the mix hopper and walk-in cooler should be below 40°F (4.4°C).

☐ 7. Discard remaining mix from the freezer during "Cleaning Procedures".

Regular Maintenance Checks

☐ 1. Replace scraper blades that are nicked or damaged. Before installing the beater assembly, be certain that scraper blades are properly attached to the helix.

☐ 2. Check the rear shell bearing for signs of wear (excessive mix leakage in rear drip pan) and be certain it is properly cleaned.

☐ 3. Using a screwdriver and cloth towel, keep the rear shell bearing and the female hex drive socket clean and free of lubricant and mix deposits.

☐ 4. Dispose of o-rings and seals if they are worn, torn, or fit too loosely, and replace with new ones.

☐ 5. Follow all lubricating procedures as outlined in "Assembly".

☐ 6. If your machine is air cooled, check the condensers for accumulation of dirt and lint. Dirty condensers will reduce the efficiency and capacity of the machine. Condensers should be cleaned **monthly** with a soft brush. **Never** use screwdrivers or other metal probes to clean between the fins.
Note: For machines equipped with an air filter, it will be necessary to vacuum clean the filters on a monthly schedule.

Caution: Always disconnect electrical power prior to cleaning the condenser. Failure to follow this instruction may result in electrocution.

☐ 7. If your machine is water cooled, check the water lines for kinks or leaks. Kinks can occur when the machine is moved back and forth for cleaning or maintenance purposes. Deteriorated or cracked water lines should be replaced only by an authorized Taylor distributor.

080107

Winter Storage

If the place of business is to be closed during the winter months, it is important to protect the freezer by following certain precautions, particularly if the building is subject to freezing conditions.

Disconnect the freezer from the main power source to prevent possible electrical damage.

On water cooled freezers, disconnect the water supply. Relieve pressure on the spring in the water valve. Use air pressure on the outlet side to blow out any water remaining in the condenser. **This is extremely important.** Failure to follow this procedure may cause severe and costly damage to the refrigeration system.

Your local Taylor Distributor can perform this winter storage service for you.

Wrap detachable parts of the freezer such as beater, blades, drive shaft, and freezer door, and place them in a protected dry place. Rubber trim parts and gaskets can be protected by wrapping them with moisture-proof paper. All parts should be thoroughly cleaned of dried mix or lubrication which attract mice and other vermin.

It is recommended that an authorized service technician perform winter storage draining, to insure all water has been removed. This will guard against freezing and rupturing of the components.

Section 8 Troubleshooting Guide

PROBLEM	PROBABLE CAUSE	REMEDY	PAGE REF.
1. No product is being dispensed.	a. Low on mix. The MIX OUT light is on.	a. Add mix to the mix hopper. Return to AUTO mode.	30
	b. The power switch is in the OFF position.	b. Place the power switch to ON and select AUTO.	29
	c. Machine not in AUTO mode.	c. Select AUTO and allow machine to cycle off before drawing product.	30
	d. Beater motor is out on reset. The BEATER OVERLOAD message displayed.	d. Turn the machine off. Press the reset button. Restart the machine in AUTO.	- - -
	e. The pump motor is not running in the AUTO mode.	e. Push the pump reset button. Check pump motor is operating when the draw valve is raised.	15
	f. Freeze-up in mix inlet hole.	f. Call an authorized service technician.	- - -
	g. The mix pump ball crank is broken.	g. Call an authorized service technician.	- - -
	h. Feed tube or check ring not properly installed.	h. Make sure feed tube and rubber check ring are properly installed.	27, 30
	i. Butterfat buildup in the pump.	i. Carefully remove the mix pump, clean and reinstall.	32
2. The product is too soft.	a. Draw rate is set too fast.	a. Adjust draw rate of 5 to 7 1/2 oz. (142 g. to 213 g.) of product by weight in 10 seconds.	25

PROBLEM	PROBABLE CAUSE	REMEDY	PAGE REF.
3. The product is too thick.	a. Freezing cylinder not primed correctly.	a. Drain the freezing cylinder and reprime the machine.	30
	b. Air/mix pump incorrectly assembled.	b. Follow assembly procedures carefully.	26
	c. The viscosity control is set too cold.	c. Call an authorized service technician.	- - -
	d. Freeze-up in mix inlet hole.	d. Call an authorized service technician.	- - -
4. The mix in the hopper is too warm.	a. Hopper cover is not in position.	a. Clean and sanitize hopper cover and place in position.	30
	b. The hopper temperature is out of adjustment.	b. Call an authorized service technician.	- - -
5. The mix in the hopper is too cold.	a. The hopper temperature is out of adjustment.	a. Call an authorized service technician.	- - -
6. Mix Low and Mix Out probes are not functioning.	a. Milkstone build-up in the hopper.	a. Clean hoppers thoroughly.	32
7. Product is collecting on top of the freezer door.	a. The top o-ring on draw valve is improperly lubricated or worn.	a. Lubricate properly or replace the o-ring.	24
8. Excessive mix leakage from the bottom of door spout.	a. Bottom o-ring on draw valve is improperly lubricated or worn.	a. Lubricate properly or replace the o-ring.	24
9. Excessive mix leakage into the long drip pan.	a. The seal on drive shaft is improperly lubricated or worn.	a. Lubricate properly or replace the seal.	21
	b. The seal is installed inside-out on the drive shaft.	b. Install correctly.	21
	c. Inadequate lubrication of the drive shaft.	c. Lubricate properly.	21
	d. The drive shaft and beater assembly work forward.	d. Call an authorized service technician.	- - -
	e. Worn rear shell bearing.	e. Call an authorized service technician.	- - -
	f. Gear box out of alignment.	f. Call an authorized service technician.	- - -

PROBLEM	PROBABLE CAUSE	REMEDY	PAGE REF.
10. The drive shaft is stuck in the drive coupling.	a. Mix and lubricant collected in drive coupling.	a. Brush clean the rear shell bearing area regularly.	33
	b. Rounded corners of drive shaft, drive coupling, or both.	b. Call an authorized service technician.	- - -
	c. Gear box is out of alignment.	c. Call an authorized service technician.	- - -
11. The freezing cylinder walls are scored.	a. Missing or worn front bearing and beater shoes.	a. Install or replace the front bearing and beater shoes.	22, 23
	b. Broken freezer door baffle rod.	b. Replace freezer door.	23
	c. Broken beater pins.	c. Replace beater assembly.	22
	d. Beater assembly is bent.	d. Replace beater assembly.	22
	e. Gear box is out of alignment.	e. Call an authorized service technician.	- - -
12. The product makes a popping sound when drawn.	a. Draw rate is set too fast.	a. Adjust draw rate of 5 to 7 1/2 oz. (142 g. to 213 g.) of product by weight in 10 seconds.	25
	b. Pump assembled incorrectly.	b. Assemble and lubricate according to instructions in this manual.	26
	c. Freezing cylinder not primed correctly.	c. Drain the freezing cylinder and reprime the machine.	30
13. No control panel functions with power switch ON.	a. Machine is unplugged.	a. Plug into wall receptacle.	- - -
	b. Circuit breaker OFF or blown fuse.	b. Turn the breaker ON or replace the fuse.	- - -

Section 9 Parts Replacement Schedule

PART DESCRIPTION	EVERY 3 MONTHS	EVERY 6 MONTHS	ANNUALLY
Scraper Blade	X		
Drive Shaft Seal	X		
Freezer Door Gasket	X		
Front Bearing	X		
Front Beater Shoes	X		
Draw Valve O-Ring	X		
Mix Feed Tube O-Ring	X		
Pump O-Ring	X		
Prime Plug O-Ring	X		
Pump Valve Gasket	X		
Mix Feed Tube Check Ring	X		
Pump Drive Shaft O-Ring	X		
White Bristle Brush, 3” x 7”		Inspect & Replace if Necessary	Minimum
White Bristle Brush, 3” x 1/2”		Inspect & Replace if Necessary	Minimum
Black Bristle Brush, 1” x 2”		Inspect & Replace if Necessary	Minimum
Double-Ended Brush		Inspect & Replace if Necessary	Minimum
Brush Set (3)		Inspect & Replace if Necessary	Minimum

DESCRIPTION	PART NUMBER	QTY.	WARR. CLASS	COMMENTS
ACTUATOR A.-DRAW SWITCH	X62401	1	103	
ARM-SWITCH-DRAW-L	038649	1	103	
ARM-SWITCH-DRAW-R	038650	1	103	
BRACKET A.-SPRING RETURN	X38257	1	103	
E-RING 1/4	032190	4	000	
PIN-PIVOT-DRAW SWITCH	038484	1	103	
ROD-SPRING RETAINER	038254	1	103	
SPRING-EXTENSION.375X.045X1.00	038922	2	103	
SPRING-RETURN-LEFT-TWIN TWIST	038923	1	103	
SPRING-RETURN-RIGHT-TWIN TWIST	038924	1	103	
BEARING-REAR SHELL-NICKEL	031324	2	000	
+NUT-BRASS BEARING	028991	2	000	
+GUIDE-DRIP SEAL	028992	2	000	
+WASHER-BEARING LOCK	012864	2	000	
BEATER A.-3.4QT-1 PIN-SUPPORT	X46231	2	103	
+BLADE-SCRAPER-PLASTIC 8-1/8L	046235	4	000	
+CLIP-SCRAPER BLADE 7.00 INCH	046236	4	103	
BELT-AX32	032769	4	000	
BELT-AX33	024396	4	000	220-240V 50HZ 1PH
BLOWER A.	X53725-27	1	103	
CAPACITOR-RUN 7.5UF/370V	034749	1	103	
CLIP-SCREEN-BLOWER	053730	4	103	
MOTOR-FAN 208-230V 50/60 HZ	053481-27	4	103	
SCREEN-BLOWER	053729	1	103	
WHEEL-BLOWER	053726	1	103	
BOOT-VALVE-EXPANSION	050900	2	000	
BRUSH-DBL END-PUMP & FEED TUBE	013072	1	000	
BRUSH-DRAW VALVE 1”OD X 2”X17”	013073	1	000	
BRUSH-END-DOOR-SPOUT-SS-HT	039719	1	000	
BRUSH-MIX PUMP BODY-3” X 7” WH	023316	1	000	

DESCRIPTION	PART NUMBER	QTY.	WARR. CLASS	COMMENTS
BRUSH-PUMP SPOUT *MC13*	054068	1	000	
BRUSH-REAR BRG 1”D X 2”LG X 14	013071	1	000	
BRUSH-SET LVB	050103	1	000	
CABLE-RIBBON-20C-17”L-DIL/DILR	040040-013	1	103	
CABLE-RIBBON-50C-25”L.DIL/DIL	040040-025	1	103	
CABLE-RIBBON-20C-14”L-DIL/DIL	040040-040	2	103	
CABLE-RIBBON-50C-10”L-DIL/DIL	040040-058	1	103	
CABLE-USB	056785	1	103	
CAP-DESIGN 1.010”ID-6 POINT	014218	3	000	
CAP-VALVE BODY SS	056874-12	2	103	
CAP-VALVE BODY SS	056874-16	2	103	
CASTER-4” SWV 3/4-10 STM	044106	4	103	
CLIP-RETAINER-MIX PUMP	044641	2	103	
COMPRESSOR TL3G-R134A	047701-27	1	512	AUX
+RELAY-START-COMPRESSOR-TL3G	047702-27	1	103	AUX
+CAPACITOR-START 60UF-220/275V	047703	1	103	AUX
+KIT-MOUNTING-COMPRESSOR	047704	1	000	AUX
COMPRESSOR CS20K6E-PFV-238	057011-27	2	512	208-230V 60HZ 1PH
+BLOCK-TERMINAL 2P L1,L2	039422	2	103	
+CAPACITOR-START 189-227UF/33	033044-1	2	103	
+CAPACITOR-RUN 40MF/440V	036049	2	103	
+RELAY-START-COMPRESSOR	052401-27	2	103	
COMPRESSOR CS20K6E-TF5-23	057011-33	2	512	208-230V 60HZ 3PH
COMPRESSOR CS20K6E-PFZ-238	057011-40	2	512	220-240V 50HZ 1PH
+BLOCK-TERMINAL 2P L1,N	039421	2	103	
+CAPACITOR-RUN 40MF/440V	036049	2	103	
+CAPACITOR-START 216-259UF/33	048908	2	103	
+RELAY-START-COMPRESSOR	051957-27	2	103	
COMPRESSOR CS20K6E-TFD-238	057011-58	2	512	380-415V 50HZ 3N~ (4WIRE)
+BLOCK-TERMINAL 4P L1,L2,L3,N 2	039424	2		
CONDENSER-AC 7X6X1.25-2 ROW	027155	1	103	AUX

DESCRIPTION	PART NUMBER	QTY.	WARR. CLASS	COMMENTS
CONDENSER-AC 12LX18HX3.12T-5RW	055813-1	1	103	MAIN LEFT
CONDENSER-AC 12LX18HX3.12T-5RW	055813-2	1	103	MAIN RIGHT
CONTROL-UVC3 SURFACE MOUNT	062529-SER	1	212	
CORD-16-2 SPT-3	023767-40	1	NNN	BLOWER A.
CORE-SCHRADER VALVE-TEFLON	037047	4	103	FOR 053565 VLVS
COUPLING-DRIVE 3/4 HEX X 1-7/8	012721	2	103	
COVER-HOPPER *BLACK*	053809-1	2	103	
DECAL-DOOR-3 SPOUT-TWIN TWIST	062239	1	000	
DECAL-INST-CLN HPR	019029	1	000	
DECAL-INST-CLN-PMP HPR	042170	1	000	
DECAL-TROUBLESHOOT	038374	1	000	
DEFLECTOR-BLOWER EXHAUST	047912	1	103	
DIAGRAM-WIRING *C712*	059898-27	1	000	208-230V 60HZ 1PH
DIAGRAM-WIRING *C712*	059898-33	1	000	208-230V 60HZ 3PH
DIAGRAM-WIRING *C712*	059898-40	1	000	220-240V 50HZ 1PH
DIAGRAM-WIRING *C712*	059898-58	1	000	380-415V 50HZ 3N
DOOR A.-3SPT*LG BAF*W/PRG*C712	X59921-SER	1	103	
+BEARING-FRONT-SHOE	050348	2	000	
+DECAL-DOOR-3 SPOUT-TWIN TWIST	062239	1	NNN	
+GASKET-DOOR-4”-DART	048926-1	2	000	
+HANDLE A.-DRAW *C602*	X56421-1	3	103	
+SCREW-ADJUSTMENT-5/16-24 *602*	056332	3	103	
+O-RING-1/4 OD X .070W 50 DURO	015872	3	000	
+PIN-HANDLE-TWIN *C712/C717*	059894	1	103	
+PLUG-PRIME TWIN *C712/C713*	059936	2	103	
+O-RING-1/2OD X .070W	024278	4	000	
+VALVE A.-DRAW *C712/C713*	X59843	2	103	
+O-RING-7/8 OD X .103W	014402	4	000	
+VALVE A.-DRAW-CENTER	X62218	1	103	
+O-RING-7/8 OD X .103W	014402	1	000	
+SEAL-DRAW VALVE	034698	1	000	

DESCRIPTION	PART NUMBER	QTY.	WARR. CLASS	COMMENTS
DRYER-CAP. TUBE .026ID X 13FT	047699	1	000	AUX
DRYER-FILTER-HP62-3/8 X 1/4S	048901	2	000	
DVD-OPS TRAIN VIDEO*C712/C713*	064417-DVD	1	000	
EYELET-RESET BUTTON	013739	6	103	
FASTENER-CLIP 1/4-20 U-TYPE	045865	12	000	PANELS, CNTR BX
FASTENER-DOOR LATCH	030787	2	000	DOOR LATCH FAST
FASTENER-DOOR STRIKE	030788	2	000	DOOR LATCH FAST
FILTER-CORCOM 6EH1	040140-001	1	103	
FILTER-AIR-POLY-FLO	052779-11	2	000	
GEAR A.*REDUCER 4.21:1	021286-SER	2	212	
GUARD-POWER SWITCH	034830	1	103	
GUIDE A.-DRIP PAN-CENTER	X59913	1	103	
GUIDE A.-DRIP PAN-LEFT	X59910	1	103	
GUIDE A.-DRIP PAN-RIGHT	X59911	1	103	
HARNESS-WIRE-BEATER MOTOR-1PH	062053-27G	2	103	208-230V 60HZ 1PH
HARNESS-WIRE-BEATER MTR-3 PH	062053-33G	2	103	208-230V 60HZ 3PH
HARNESS-WIRE-COMPRESSOR	062056-33G	2	103	208-230V 60HZ 3PH
HARNESS-WIRE-BEATER MTR-3 PH	062053-33G	2	103	380-415V 50HZ 3N
HARNESS-WIRE-COMPRESSOR	062056-33G	2	103	380-415V 50HZ 3N
HARNESS-WIRE-BLOWER C712/C713	062057	1	103	
HARNESS-WIRE-LW V-CNTL CHNNL	062049	1	103	
HARNESS-WIRE-LW V-MIX HOPPER	062050	1	103	
HARNESS-WIRE-POWER SWITCH	062051	1	103	
HARNESS-WIRE-MIX PMP C712/C716	062055	2	103	
HINGE A.-MOTOR *632-8756* ALT	X25736	2	103	
JACK A.-FLAVORBURST *C706*	X56353	2	103	
KIT A.-TUNE C712 SIMPL PUMP	X49463-81	1	000	
KIT A.-PUMP-SIMPLIFIED SS/SH	X56200-10	2	000	
O-RING-1-3/4 OD X .139W	008904	2	NNN	
O-RING-11/16ODX.103W-RED	016132	4	NNN	
O-RING-2-1/8 OD X .139W-#225	020051	4	NNN	

DESCRIPTION	PART NUMBER	QTY.	WARR. CLASS	COMMENTS
O-RING 1/2 ID X .139W	048632	4	NNN	
GASKET-SIMPLIFIED PUMP VALVE	053527	2	000	
RING-CHECK-FEED-TUBE	056524	2	NNN	
KIT A.-DRAW VALVE C712	X56200-17	1	000	
CAP-DESIGN 1.010”ID-6 POINT	014218	3	NNN	
O-RING-7/8 OD X .103W	014402	5	NNN	
O-RING-1/2OD X .070W	024278	4	NNN	
SEAL-DRAW VALVE	034698	1	NNN	
KIT A.-BARREL *TWIN SS*8784* 1	X56200-6	1	103	
SEAL-DRIVE SHAFT	032560	2	NNN	
GASKET-DOOR-4”-DART	048926-1	2	000	
SHOE-FRONT HELIX *REAR*	050346	2	000	
SHOE-FRONT HELIX *FRONT*	050347	2	000	
BEARING-FRONT-SHOE	050348	2	000	
TOOL-O-RING REMOVAL-FREEZER	048260-WHT	1	000	
KIT-MOUNTING-COMPRESSOR CS	052197	2	000	
LABEL-SW-POWER-OFF/ON-SYMBOLS	052632	1	000	
LUBRICANT-TAYLOR 4 OZ.	047518	1	000	
MANIFOLD-1/2S THRU-1/4S OUT-2	046687	2	NNN	LINE DISCHARGE
MAN-OPER C712	062179-M	1	000	
MOTOR-1.5 HP CAPS@10&2 O'CLOCK	021522-27	2	212	208-230V 60HZ 1PH
MOTOR-1.5 HP	021522-33	2	212	208-230V 60HZ 3PH
MOTOR-1.5 HP CAPS@10&2 O'CLOCK	021522-34	2	212	220-240V 50HZ 1PH
MOTOR-1.5 HP	021522-35	2	212	380-415V 50HZ 3N
MOTOR-FAN	062253-27	1	103	AUX
MOTOR-REDUCER 32 RPM-HPR PUMPM	036955-34	2	212	MIX PUMP
NUT-STUD-BLACK 2.563 LONG	058764	2	103	
NUT-STUD-BLACK 3.250 LONG	058765	2	103	
ORIFICE	022465-100	2	103	
+O-RING-3/8 OD X .070W	016137	2	000	
PAIL-MIX 10 QT.	013163	1	000	

DESCRIPTION	PART NUMBER	QTY.	WARR. CLASS	COMMENTS
PAN-DRIP 7.875	059737	2	NNN	
PAN-DRIP 12.5	059736	2	NNN	
PAN-DRIP 19-1/2 LONG	035034	1	103	
PANEL A.-FILTER-LOUVERED	X59928	2	103	
PANEL A.-FRONT *C712/C716*	X63879	1	103	MIDDLE FRONT UNDER NOSE CONE
PANEL A.-FRONT *C712-C717*	X59836	1	103	UPPER FRONT W/ NOSE CONE
PANEL A.-FRONT LOWER	X59854	1	103	
PANEL-CORNER-FRNT-R *C712/C717	063087	1	103	REPLACES 059882
PANEL-CORNER-FRNT-L*C712/C717*	063088	1	103	REPLACES 059882
PANEL-REAR *C712/C716*	059916	1	103	
PANEL-SIDE-LEFT *C712/C717*	059906	1	103	
PANEL-SIDE-RIGHT *C712/C717*	059907	1	103	
PCB A.-CONTROL *C712* UVC3 SM	X62290	1	212	
CHIP-SOFTWARE C712 UVC3SM	X40888	1	103	
CONTROL-UVC3 SURFACE MOUNT	059189-SER	1	212	
PCB A.-INTERFACE-HOT GAS-C602	X59485-SER	2	212	
CHIP-SOFTWARE MIX LEVEL	X40799	2	103	
PCB A.-INTERFACE *C712-C717	X62101-SER	1	212	
CHIP-SOFTWARE *C602* FP	X40821	1	103	
PIN-COTTER-HAIRPIN-1/8DIA	044731	2	103	
PLATE-DEC *C712* SYRUP RAIL	062121	1	103	
PULLEY-2AK22 X .625-.6265	016403	2	103	208-230V 60HZ 1PH / 208-230V 60HZ 3PH
PULLEY-2AK27 X .625-.6265	011545	2	103	220-240V 50HZ 1PH / 380-415V 50HZ 3N
PULLEY-2AK74-5/8	027822	2	103	220-240V 50HZ 1PH/380-415V 50HZ 3N~ (4WIRE)
PUMP A.-MIX SIMPLIFIED S.S.	X57029-14	2	103	
ADAPTOR-MIX INLET-SS-RED	054825	2	103	
CAP-VALVE BODY SS	056874-14	2	103	
CYLINDER-PUMP HOPPER SOFTSERVE	057943	2	103	
GASKET-SIMPLIFIED PUMP VALVE	053527	2	000	
O-RING-2-1/8 OD X .139W-#225	020051	4	000	
PIN A.-RETAINING	X55450	2	103	

DESCRIPTION	PART NUMBER	QTY.	WARR. CLASS	COMMENTS
PISTON-PUMP-SIMPLIFIED	053526	2	103	
+CLIP-RETAINER-MIX PUMP	044641	2	103	
RELAY-MTR START TI#4CR-1-625	039725-27	2	103	
RELAY-3 POLE-20A-208/240 50/60	012725-33	2	103	
RELAY-DPDT 100UA TO 7A 1/8HP	052111-03	2	103	
SANITIZER-STERA SHEEN-GREEN	065293	1	NNN	
SCREW-10-24X1/2 TAPTITE-TORX	002077	4	000	TRIM
SCREW-6-32X3/8 BIN.HD SLOT SS	002201	2	000	DEC PLATE
SCREW-5/16-18X2-1/2 HEX CAP	002498	8	000	B/M MOUNT
SCREW-10-32X3/8 RHM-ZP	002742	8	000	LOUVERS
SCREW-1/4-20X3/8 RHM-STNLS	011694	14	000	PANELS
SCREW-1/4-20X3/4 SOC HD CAP	020128-2	6	000	MIX PUMP MOTORS
SCREW-8X3/8 RD HD TYP B	013234	2	000	CORNER TRIM
SCREW-5/16-18X3-1/4STL HEXCAP	022678	4	000	
SCREW-5/16-18X2-3/4 HEX CAP	004191	8	000	
SHAFT A.-DRIVE-MIX PUMP-HOPPER	X41947	2	103	
CRANK-DRIVE-HOPPER MIX PUMP	039235	2	103	
O-RING 1/2 ID X .139W	048632	4	000	
O-RING-1-3/4 OD X .139W	008904	2	000	
SHAFT-DRIVE-MIX PUMP-HOPPER	041948	2	103	
+SEAL-DRIVE SHAFT	032560	2	000	
SHELL A.-INSULATED	X59881	1	512	
+STUD-NOSE CONE *C602	055987	4	103	
SHIELD-SPLASH-WIRE-19-3/4 L	033813	1	103	
SHOE-FRONT HELIX *FRONT*	050347	2	000	
SHOE-FRONT HELIX *REAR*	050346	2	000	
SOCKET-RELAY-FOR US W/052111	052112	2	103	
SPRING-COMP.970X.113X1.5	032967	4	103	
STARTER-1 PHASE-4.5 TO 7 A	041950-27K	2	103	
SWITCH A.-DUAL LEVER	X62400	1	103	
SWITCH-LEVER-SPDT-10A-125-250V	028889	4	103	

DESCRIPTION	PART NUMBER	QTY.	WARR. CLASS	COMMENTS
SCREW-4-40X1” TAPTITE PAN HD	045141	4	000	
BRACKET-SWITCH*C712*	062394	1	103	
ACTUATOR-TANDEM LEAF	062408	2	103	
SWITCH-PRESSURE 405 PSI-SOLDER	052663	2	103	LINE DISCHARGE
SWITCH-REED *DOOR INTERLOCK*	056249	1	103	
TOOL-SHAFT-DRIVE-PUMP-HOPPER	057167	1	000	
TRANS.-CONT.-32VA 120/200/240V	054834	1	103	
TRANS.-120/208/240V PRI 24VSEC	051660	1	103	
TRAY-DRIP *C712/C717*	059892	1	103	
TRAY-DRIP-19-5/8 L X 4-7/8	033812	1	103	
TRIM-CORNER-REAR-L	059896	1	103	
TRIM-CORNER-REAR-R	059897	1	103	
TUBE A.-FEED-LEFT *C712/C717*	X59808	1	103	
+O-RING-11/16ODX.103W-RED	016132	4	000	PUMP TUBES
TUBE A.-FEED-RIGHT *C712/C717*	X59809	1	103	
+O-RING-11/16ODX.103W-RED	016132	4	000	PUMP TUBES
TUBE A.-FEED-SS-5/32 HOLE DIA	X29429-2	2	103	
+O-RING-.643 OD X .077W	018572	8	000	
VALVE-ACCESS-1/4 MFLX1/4 S-90	047016	1	103	DANFOSS ACCESS
VALVE-ACCESS 1/4FL X 1/4SOLDER	044404	1	103	LINE SUCTION DNFS
VALVE-ACCESS-1/4MFL X 3/8ODSDR	053565	4	103	LINE DISCHARGE / LINE ACCESS
VALVE-EPR 1/4S	022665	1	103	LINE SUCTION DNFS
VALVE-EXP-AUTO-1/4S X1/4 FPT	046365	2	103	
VALVE A.-AXV-L *C712,C713*	X63349	1	103	
DRYER-FILTER-HP62-3/8 X 1/4S	048901	1	000	
VALVE-SOLENOID 7/64ORF X 1/4S	043449-27	1	103	
VALVE A.-AXV-R *C712,C713*	X63350	1	103	
DRYER-FILTER-HP62-3/8 X 1/4S	048901	1	000	
VALVE-SOLENOID 7/64ORF X 1/4	043449-27	1	103	

DESCRIPTION	PART NUMBER	QTY.	WARR. CLASS	COMMENTS
WATER COOLED				
BLOWER A. C712/C717	X62380-27G	1	103	
CONDENSER-WC-COAX	047540	2	103	
DEFLECTOR-BLOWER EXHAUST	047912	1	103	
GUARD-BLOWER	022505	1	103	
HOSE-RUBBER 1/2 ID X 7/8 OD	R50200	15	000	
OUTLET A.-TEE	X25900	1	103	
PANEL-SIDE-L. W/C *C712/C717	062160	1	103	
PANEL-SIDE-R. W/C *C712/C717	062161	1	103	
PLATE-CONDENSER W/C	062043	1	103	
TEE-3/8” PIPE WATER VALVE	032953	1	103	
VALVE-WATER 3/8 REG/HEAD PRESS	046686	2	103	

Model C712
059898-27
9/05

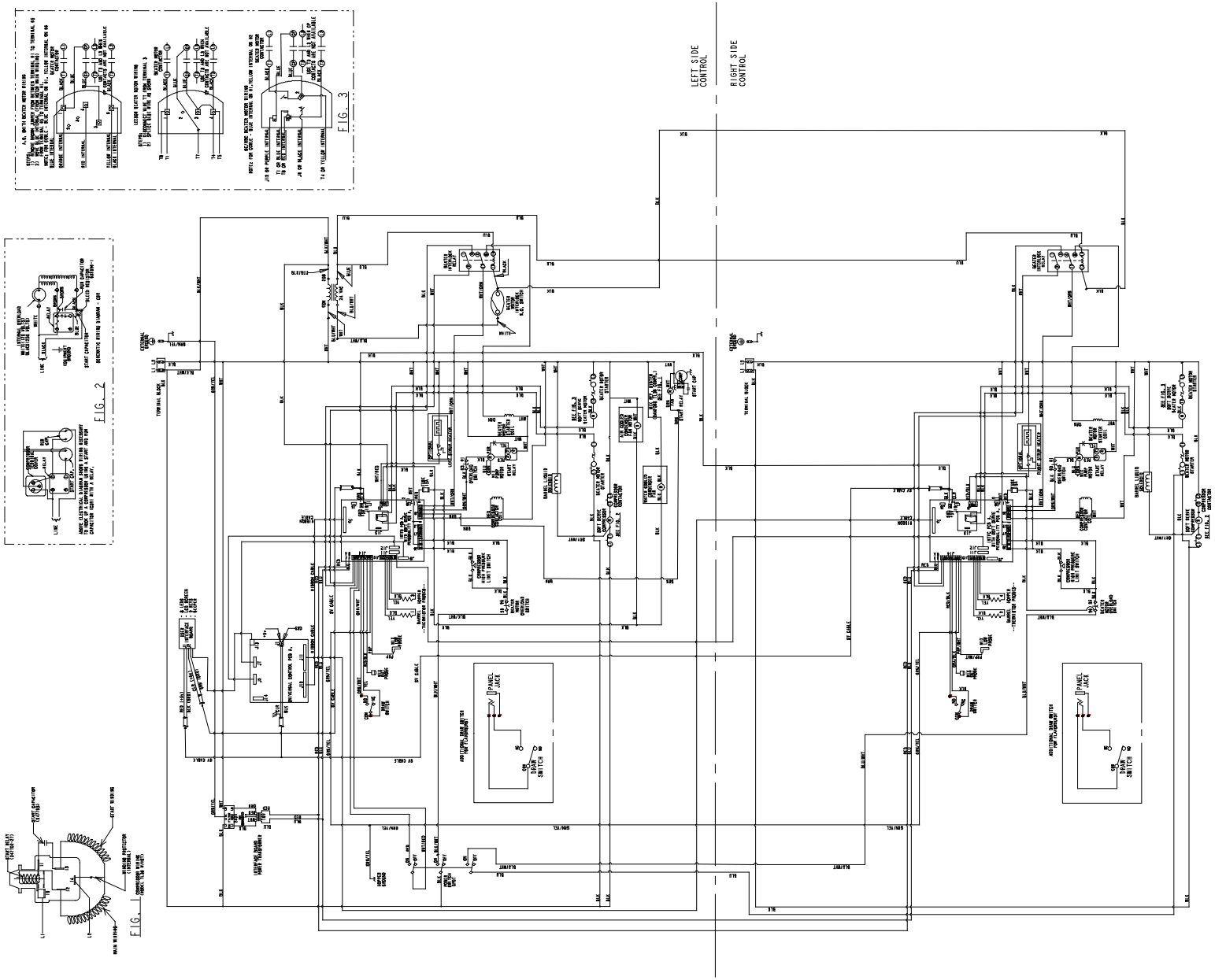

	UVC3 BOARD	FUNCTION	JUMPER INSTALLED INITIALLY
JP1	PINS 1 AND 2	JUMPER INSTALLED- NORMAL APPLICATIONS USING REFRIGERATED MIX	YES
	PINS 1 AND 2	NO JUMPER INSTALLED-GENERAL MARKET CONFIGURATION USING NON-REFRIGERATED MIX. IGNORES HOPPER TEMPERATURE LOCKOUT PARAMETERS TO ALLOW ADDING NON-REFRIGERATED MIX INTO THE HOPPER.	
	PINS 3 AND 4	JUMPER STORAGE	NO
JP2	PINS 1 AND 2	DOMESTIC CONFIGURATION-JUMPER INSTALLED HOPPER TEMPERATURE NOT DISPLAYED ON SCREEN/STANDBY KEYS DISABLED	YES
	PINS 1 AND 2	INTERNATIONAL CONFIGURATION-JUMPER NOT INSTALLED HOPPER TEMPERATURE DISPLAYED ON SCREEN/STANDBY KEYS FUNCTIONAL.	
	PINS 3 AND 4	JUMPER STORAGE	NO
JP3	PINS 1 AND 2	JUMPER INSTALLED ENABLES AUDIBLE DEVICE LOCATED ON UVC3 CONTROL. DISABLED IN MODELS THAT HAVE AN AUDIBLE DEVICE ON THE CONTROL PANEL BOARD.	NO
	PINS 3 AND 4	JUMPER STORAGE	NO

	LEFT INTERFACE BOARD	FUNCTION	JUMPER INSTALLED INITIALLY
W2			NO
W3		JUMPER INSTALLED-ACTIVATES SYRUP HEATERS	NO*
W4			NO
W5			NO

	RIGHT INTERFACE BOARD	FUNCTION	JUMPER INSTALLED INITIALLY
W2		JUMPER INSTALLED-ENABLES 59°F PRODUCT TEMPERATURE CHECK	NO
W3			NO
W4			NO
W5			NO

* IF THE UNIT HAS THE INTEGRAL SYRUP OPTION-405, THEN THIS JUMPER SHOULD BE INSTALLED.

NOTE:

1. STATIC ELECTRICITY MAY CAUSE DAMAGE TO SOLID STATE COMPONENTS. ELIMINATE STATIC ELECTRICITY BY TOUCHING GROUNDED UNIT BEFORE HANDLING SOLID STATE COMPONENTS.
2. RED WIRE ON RIBBON CABLES MUST BE CONNECTED TO PIN 1 AT EACH END.

GROUND FRAME SECURELY

Model C712
059898-33
9/05

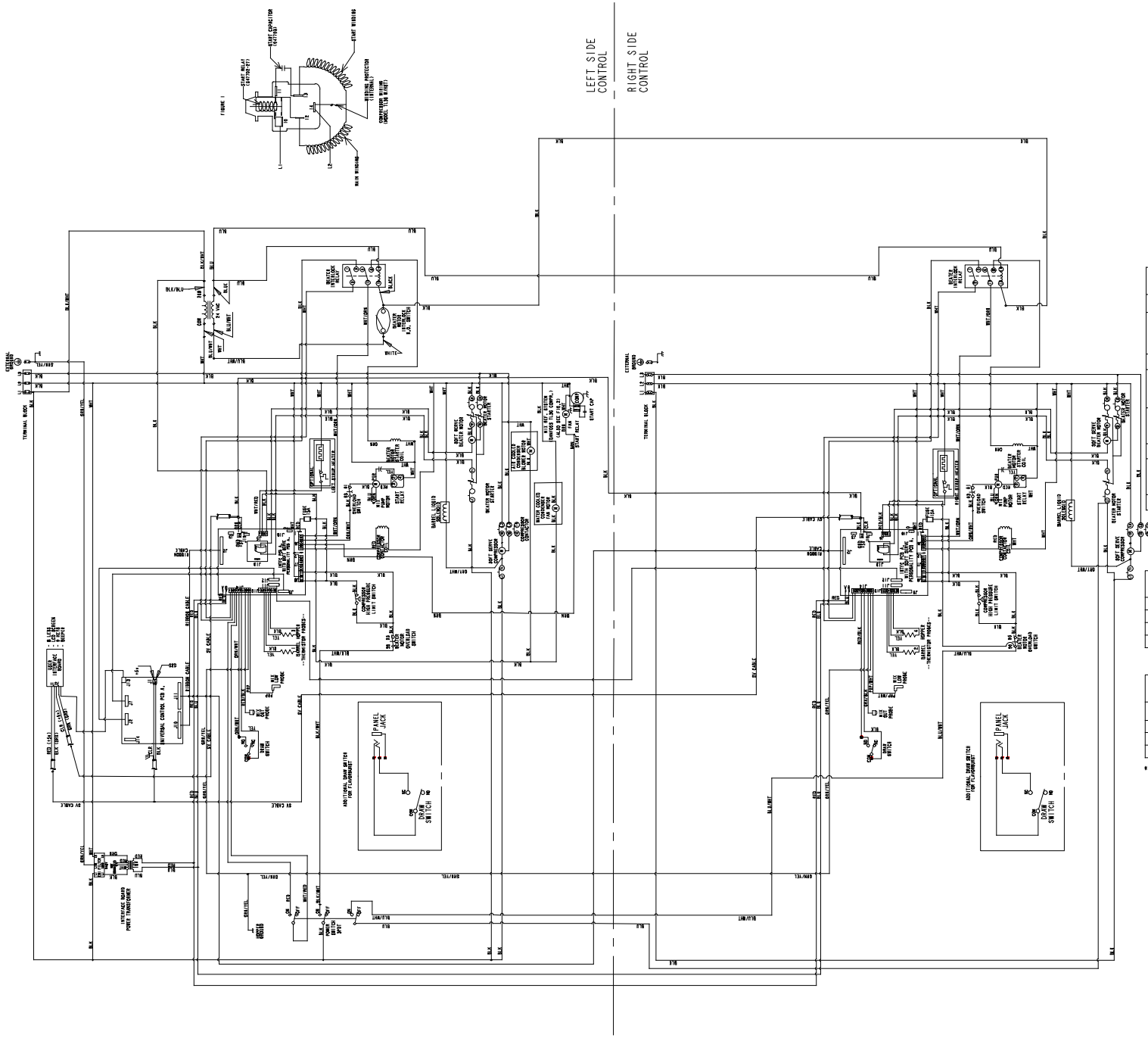
FIGURE 1
START CAPACITOR
START WINDING
RUNNING CAPACITOR
WINDING PROTECTOR (INTERNAL)
MAIN WINDING
LEFT SIDE CONTROL
RIGHT SIDE CONTROL
TERMINAL BLOCK
EXTERNAL SWITCH
UVC3 PCB
UNIVERSAL CONTROL PCB A
INTERFACE BOARD POWER TRANSFORMER
PANEL JACK
DRAIN SWITCH
ADDITIONAL DRAIN SWITCH FOR FLAVORBURST
MIX LOW PHONE
MIX OUT PHONE
DOOR SWITCH
BEATER MOTOR
BEATER MOTOR STARTER COIL
BEATER MOTOR OVERLOAD
BEATER MOTOR CAPACITOR
BEATER MOTOR THERMOSTAT
SOFT SERVE MOTOR
SOFT SERVE MOTOR OVERLOAD
SOFT SERVE MOTOR CAPACITOR
SOFT SERVE MOTOR THERMOSTAT
SOFT SERVE COMPRESSOR
COMPRESSOR CAPACITOR
COMPRESSOR OVERLOAD
COMPRESSOR STARTER COIL
COMPRESSOR DOOR LIMIT SWITCH
MOTOR OVERLOAD SWITCH
START RELAY
START CAP
PUMP
HOT FUDGE PUMP
HOT FUDGE PUMP OVERLOAD
HOT FUDGE PUMP CAPACITOR
HOT FUDGE PUMP THERMOSTAT
BARREL HEATER
BARREL HEATER THERMOSTAT
BARREL HEATER OVERLOAD
BARREL HEATER CAPACITOR
BARREL HEATER SWITCH
BARREL HEATER SWITCH OVERLOAD
BARREL HEATER SWITCH CAPACITOR
BARREL HEATER SWITCH THERMOSTAT
BEATER MOTOR SWITCH
BEATER MOTOR SWITCH OVERLOAD
BEATER MOTOR SWITCH CAPACITOR
BEATER MOTOR SWITCH THERMOSTAT
BEATER MOTOR SWITCH STARTER COIL
BEATER MOTOR SWITCH OPTIONAL
BEATER MOTOR SWITCH OPTIONAL
BARREL HEATER SWITCH OPTIONAL
BARREL HEATER SWITCH OPTIONAL
BARREL HEATER

Model C712
059898-40
6/05

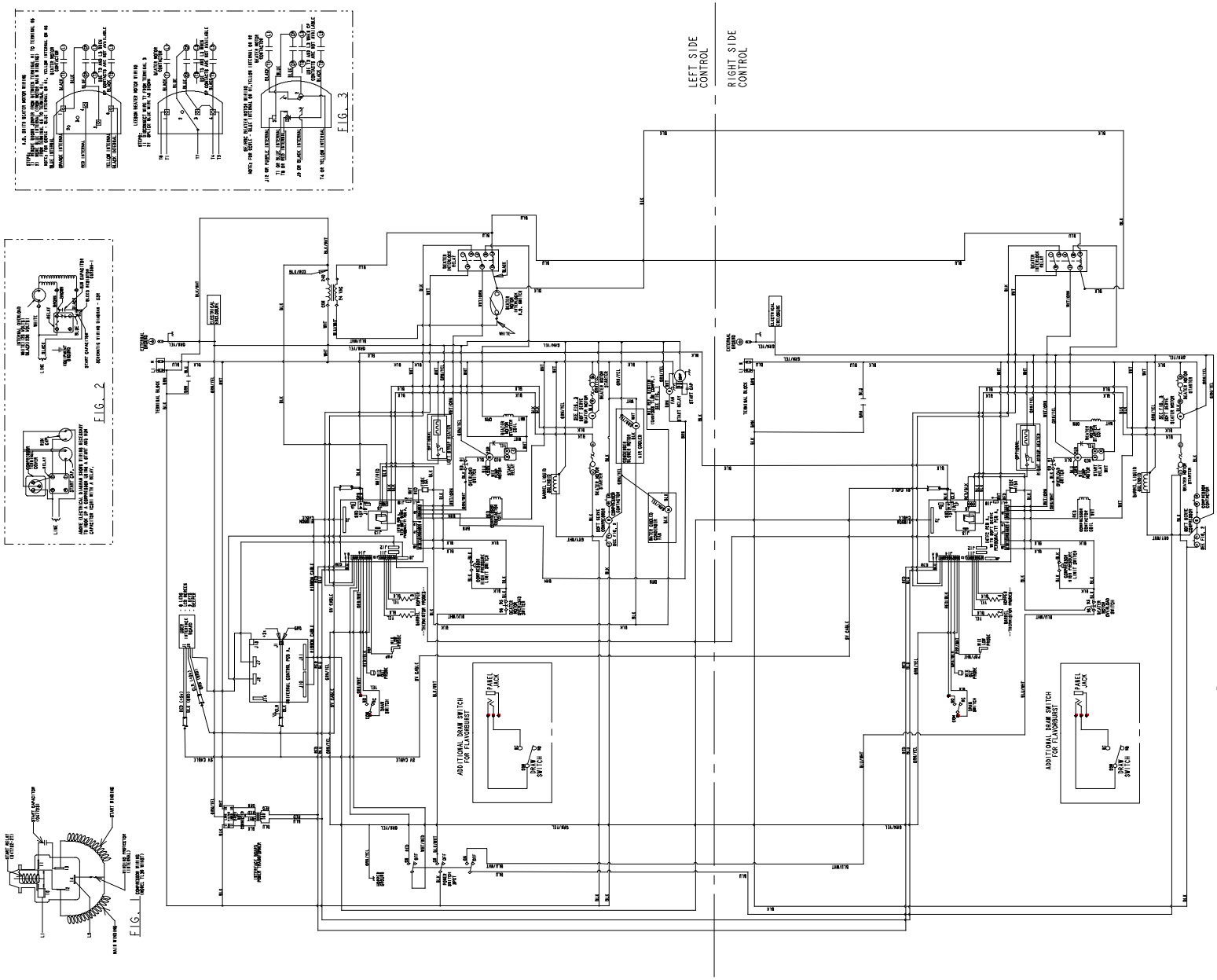

	UVC3 BOARD	FUNCTION	JUMPER INSTALLED INITIALLY
JP1	PINS 1 AND 2	JUMPER INSTALLED- NORMAL APPLICATIONS USING REFRIGERATED MIX	YES
	PINS 1 AND 2	NO JUMPER INSTALLED-GENERAL MARKET CONFIGURATION USING NON-REFRIGERATED MIX. IGNORES HOPPER TEMPERATURE LOCKOUT PARAMETERS TO ALLOW ADDING NON-REFRIGERATED MIX INTO THE HOPPER.	
	PINS 3 AND 4	JUMPER STORAGE	NO
JP2	PINS 1 AND 2	DOMESTIC CONFIGURATION-JUMPER INSTALLED HOPPER TEMPERATURE NOT DISPLAYED ON SCREEN/STANDBY KEYS DISABLED	YES
	PINS 1 AND 2	INTERNATIONAL CONFIGURATION-JUMPER NOT INSTALLED HOPPER TEMPERATURE DISPLAYED ON SCREEN/STANDBY KEYS FUNCTIONAL.	
	PINS 3 AND 4	JUMPER STORAGE	NO
JP3	PINS 1 AND 2	JUMPER INSTALLED ENABLES AUDIBLE DEVICE LOCATED ON UVC3 CONTROL. DISABLED IN MODELS THAT HAVE AN AUDIBLE DEVICE ON THE CONTROL PANEL BOARD.	NO
	PINS 3 AND 4	JUMPER STORAGE	NO

	LEFT INTERFACE BOARD	FUNCTION	JUMPER INSTALLED INITIALLY
W2			NO
W3		JUMPER INSTALLED-ACTIVATES SYRUP HEATERS	NO*
W4			NO
W5			NO

	RIGHT INTERFACE BOARD	FUNCTION	JUMPER INSTALLED INITIALLY
W2		JUMPER INSTALLED-ENABLES 59°F PRODUCT TEMPERATURE CHECK	NO
W3			NO
W4			NO
W5			NO

* IF THE UNIT HAS THE INTEGRAL SYRUP OPTION-405, THEN THIS JUMPER SHOULD BE INSTALLED.

NOTE:

1. STATIC ELECTRICITY MAY CAUSE DAMAGE TO SOLID STATE COMPONENTS. ELIMINATE STATIC ELECTRICITY BY TOUCHING GROUNDED UNIT BEFORE HANDLING SOLID STATE COMPONENTS.
2. RED WIRE ON RIBBON CABLES MUST BE CONNECTED TO PIN 1 AT EACH END.

GROUND FRAME SECURELY

Model C712
059898-58
9/05

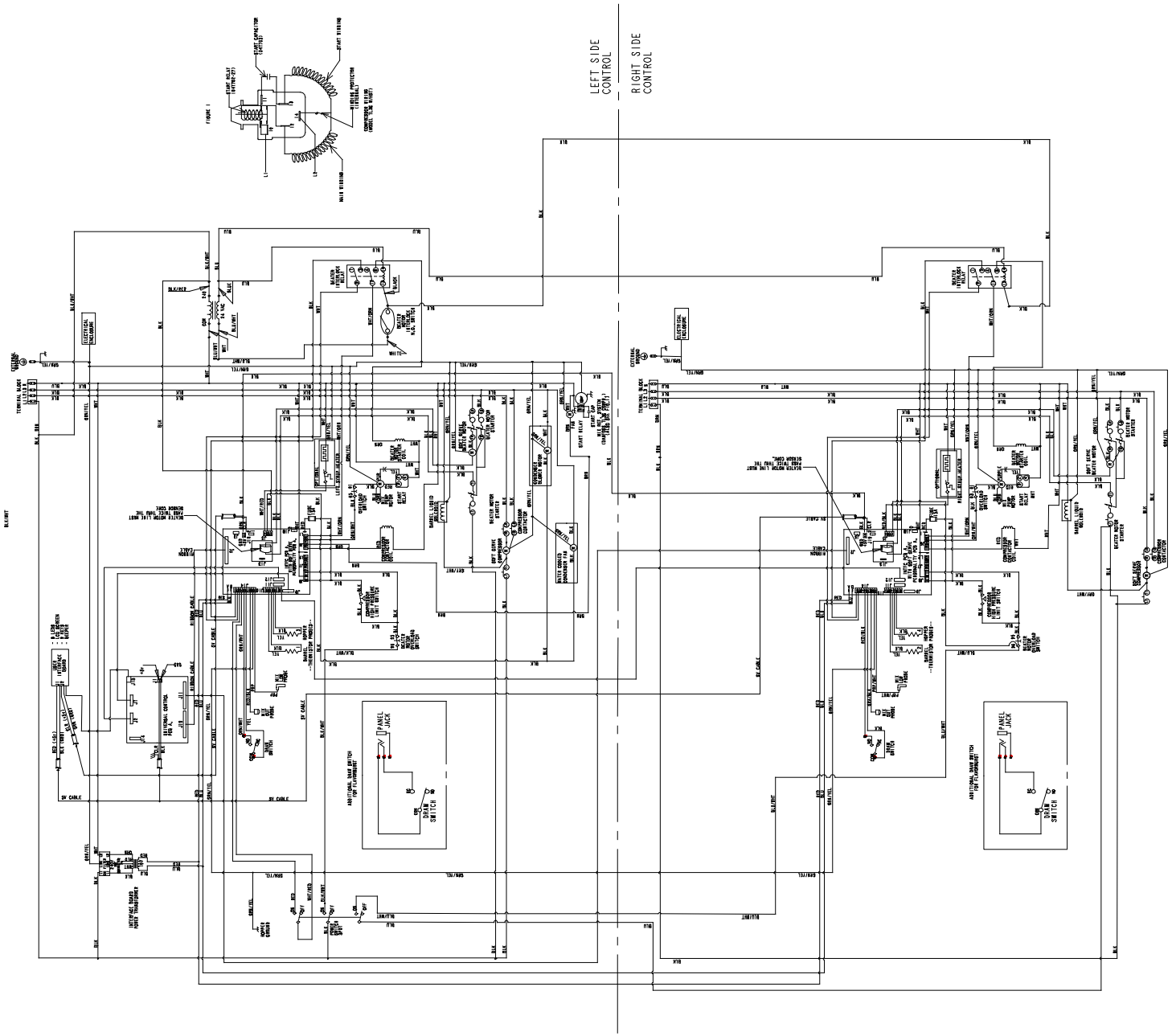
LEFT SIDE CONTROL
RIGHT SIDE CONTROL
FIGURE 1
START RELAY (K4/TRR-27)
START CAPACITOR (C4/TRR-1)
START WINDING
MAIN WINDING
INTERNAL PROTECTOR (INTERNAL TO COMPRESSOR HOUSING)
COMPRESSOR CASE (GROUND TO AC WIRING)
ELECTRICAL DISCHARGE
TERMINAL BLOCK
EXTERNAL GROUND
INTERFACE BOARD INPUT TRANSFORMER
INTERFACE BOARD
LED DIAGNOSTIC DISPLAY
MAIN CONTROL BOARD
PANEL JACK
DRAW SWITCH
ADDITIONAL DRAW SWITCH FOR FLAVORMIST
WATER MOTOR STARTER
WATER MOTOR
WATER MOTOR LINE NOISE FILTER
WATER MOTOR LINE NOISE FILTER (RIBBON CORE)
WATER MOTOR LINE NOISE FILTER (RIBBON CORE TWO TIMES)
WATER MOTOR LINE NOISE FILTER (RIBBON CORE TWO TIMES)
WATER MOTOR CAPACITOR
WATER MOTOR CAPACITOR (RIBBON CORE)
WATER MOTOR CAPACITOR (RIBBON CORE TWO TIMES